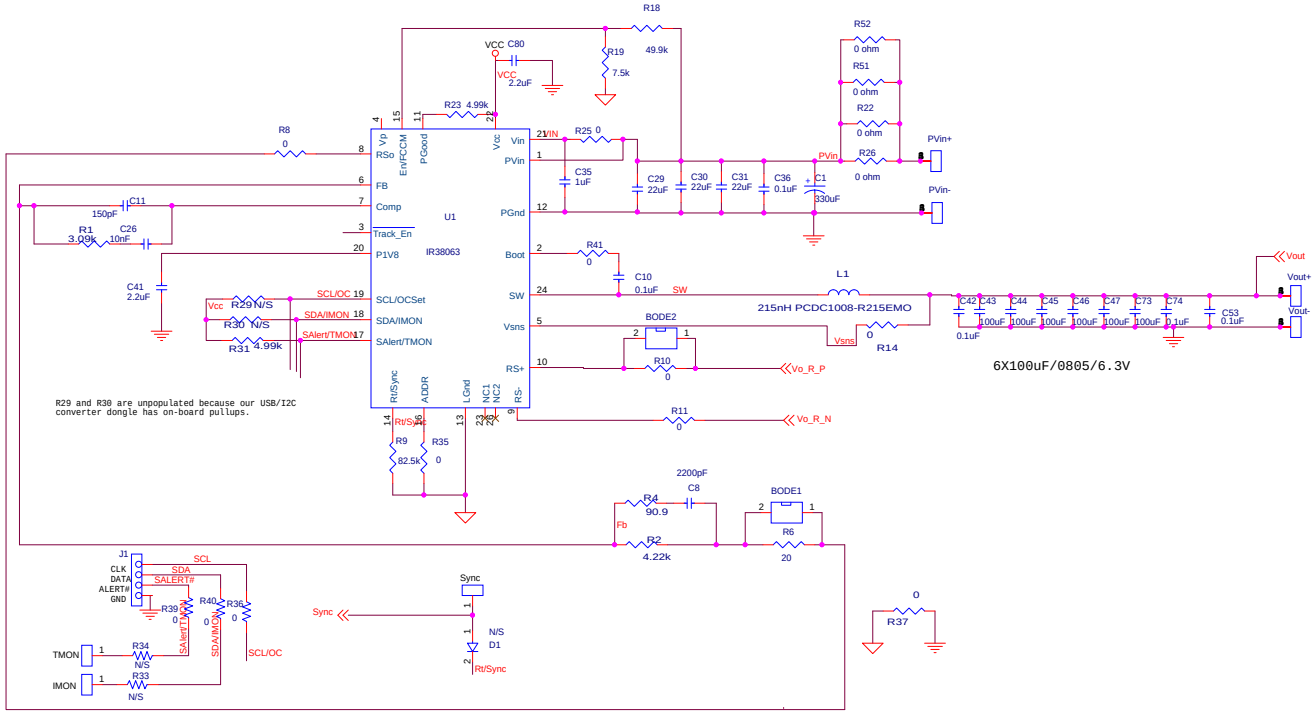

Title	<Title>	
Size C	Document Number <Doc>	Rev <RevCode>
Date: Friday, August 01, 2014	Sheet 1 of 2	