Tire Pressure Monitoring System (TPMS) with SP37

Infineon Technologies AP
Ngee-Hou **TAN**

Never stop thinking

Direct TPMS – Sensing of Air Pressure within tyres

- *Gas Law*

$$p \cdot V = n \cdot R \cdot T$$

- *For a given mass at constant temperature,*
  - *Pressure * Volume = Constant*
- *For a given mass at constant pressure,*
  - *Volume is directly proportional to temperature*

Acceleration – Additional Feature for Flexibility

- "center seeking" force, $\boldsymbol{F_{centripetal}}$
- object must be accelerating towards the center of rotation even at constant speed

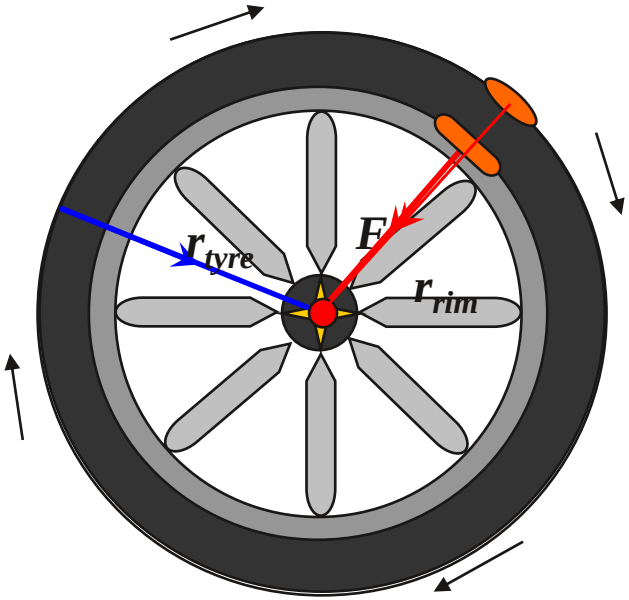

$$F_{centripetal} = m \frac{v^2}{r_{tire}} = m \frac{v^2}{r} \times \frac{r_{rim}}{r_{tire}}$$

Block Diagram of Direct TPMS

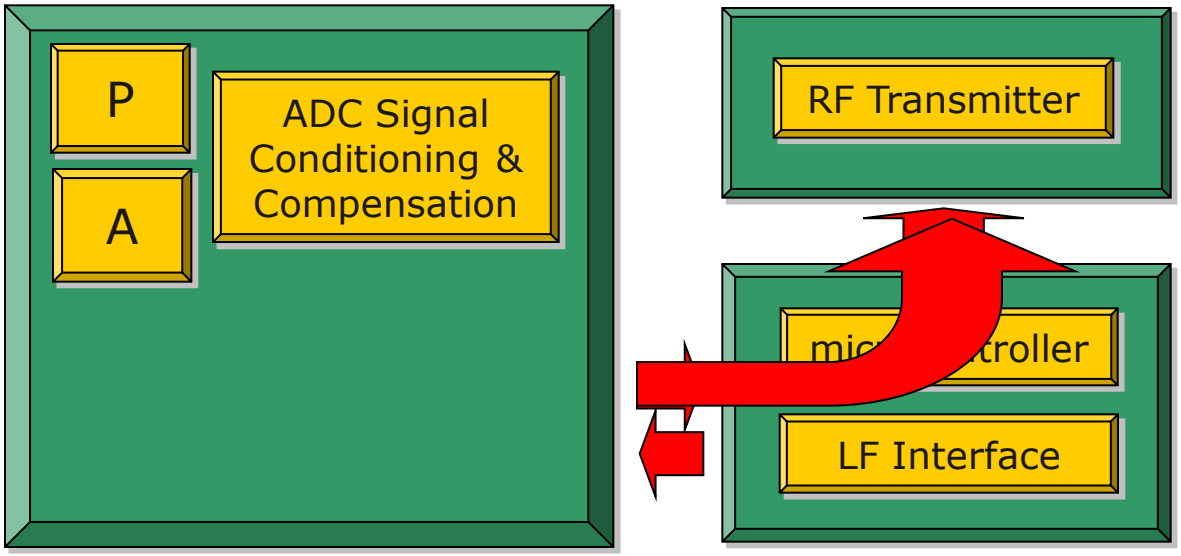

TPMS with SP37!

Sensors, MCU, LF and Transmitter on a single chip

Build TPMS system with

- Single Chip Solution
- Integrated Sensors
  - Pressure
  - Acceleration
  - Temperature
  - Voltage
- Integrated Transmitter
- High LF Sensitivity

Inside SP37

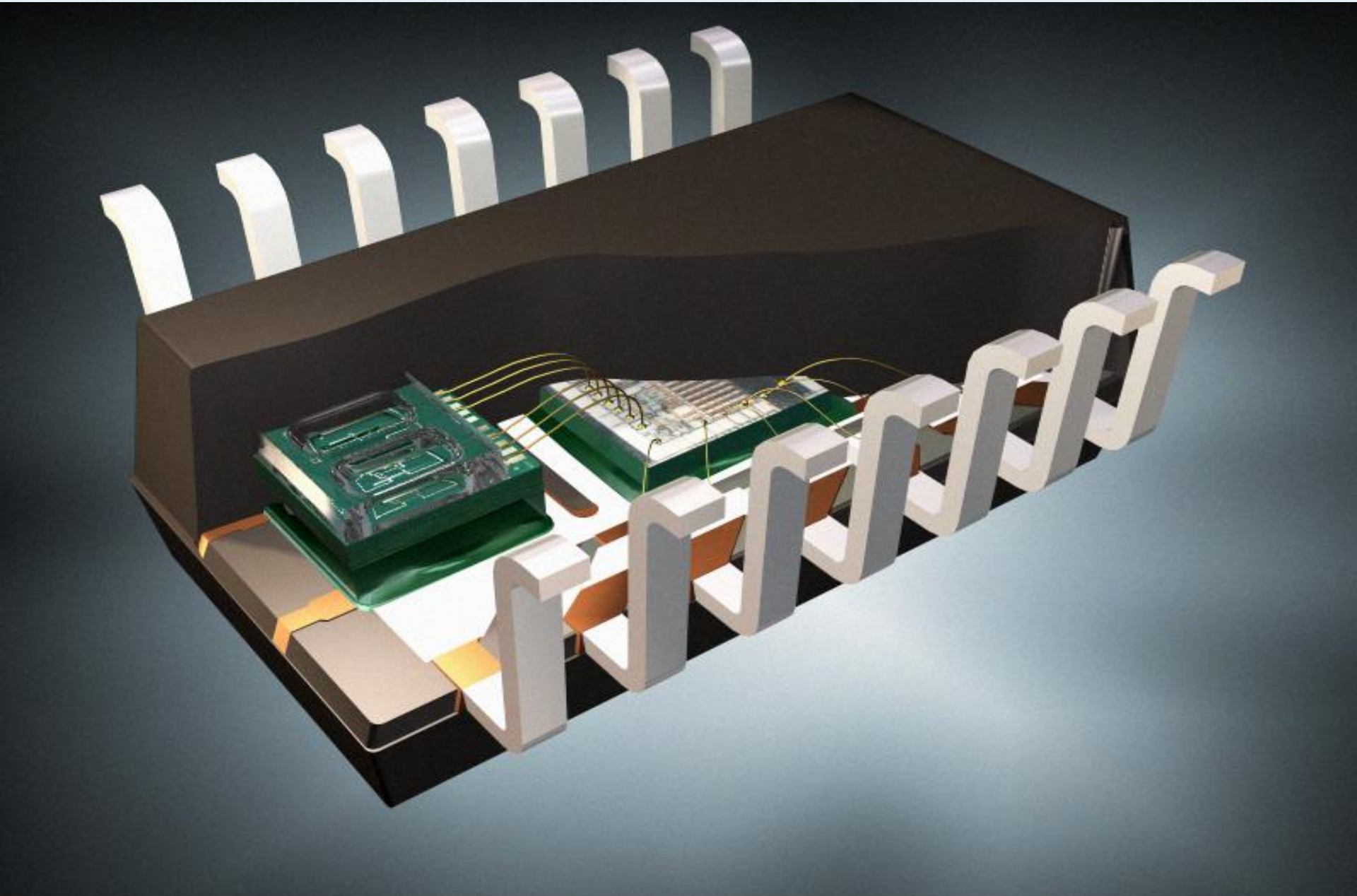

SP37 Single Package TPMS Sensor

- Integrated Sensors:
  - Pressure
  - Acceleration
  - Temperature
  - Battery Voltage

- Integrated peripherals
  - 8051 Micrcontroller
  - on board FLASH
  - 3x GPIOs
  - ADC for signal conditioning
  - LF Receiver
  - **315/433 MHz RF Transmitter!!**

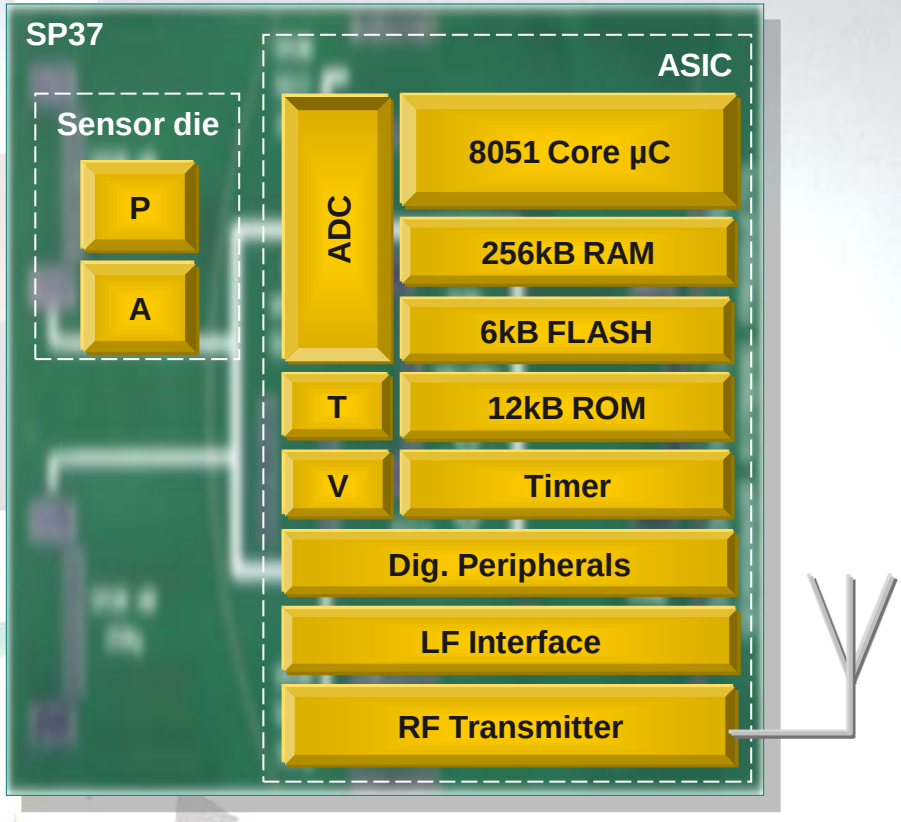

SP37 Operating Range

- 1.9 – 3.6 V for RF & µC operation
- 2.1 – 3.6 V for Pressure & Acceleration measurements
- 2.5 – 3.6 V for FLASH Programming
- -40°C..+125°C full specified operation
- Limited time allowed up to 150°C in thermal shutdown
- Temperature transients to max. 175°C

Introducing the SP37

The SP37 is an very high integrated tire pressure monitoring sensor with a-low power embedded micro-controller and wireless FSK/ASK UHF transmitter. It is a single-chip solution suited for the TPMS application. With its highly-integrated, mixed signal peripherals, the SP37 requires very few external components to form a completely functioning device.

- Integrated FSK&ASK UHF transmitter
- Advanced power control features
- Ultra low standby current (<0.7µA)
- Supply voltage range 1.9V to 3.6V
- Operating temperature range -40 to +125°C
- DSOSP - 14 package (Type 6)

SP37 (PG-DSOSP 14)

Product Features

- Integrated Pressure Sensor
- Integrated Acceleration Sensor
- Integrated Temperature Sensor
- Integrated Battery Voltage Sensor
- Embedded **8051 µC**
- 6KB FLASH Memory
- 256B Data RAM
- On-Chip Program/Debug Capability
- Pseudo-Random Number Generator
- CRC16 Generator/Checker
- Two 16-bit Timers
- Interval Wake-Up Timer
- I^2C Master/Slave Interface
- 3 Ch. Differential **10-bit ADC**
- 3 General Purpose I/O Pins
- **315/434 MHz ASK/FSK UHF Transmitter**
- 125 KHz LF Receiver

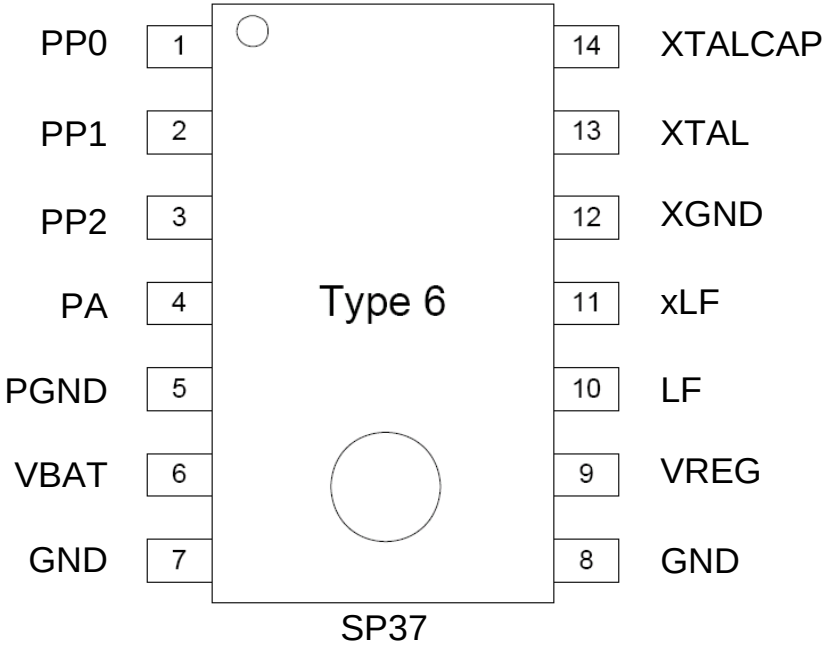

SP37 Digital core

- **16 kB library subroutines in ROM (IFX)**
- **256 Byte RAM**
  - **128 bytes of RAM can be powered during power-down state by setting a control bit in the SFR.**
- **16 Byte non-volatile registers**
- **Embedded peripherals for**
  - **I²C Bus, Data encoder (Manchester, diff. Manchester, Biphase, diff. Biphase, Chip-mode), CRC-16, Random Number generator, GPIO Pins**
- **No Interrupt-Controller**
  - **Timing is triggered by wakeup- and resume events for ultra low-power applications**
- **Further Modifications form Standard 8051 core**
  - **Clock gating, Reduced instruction cycling, MOVX command redirected**

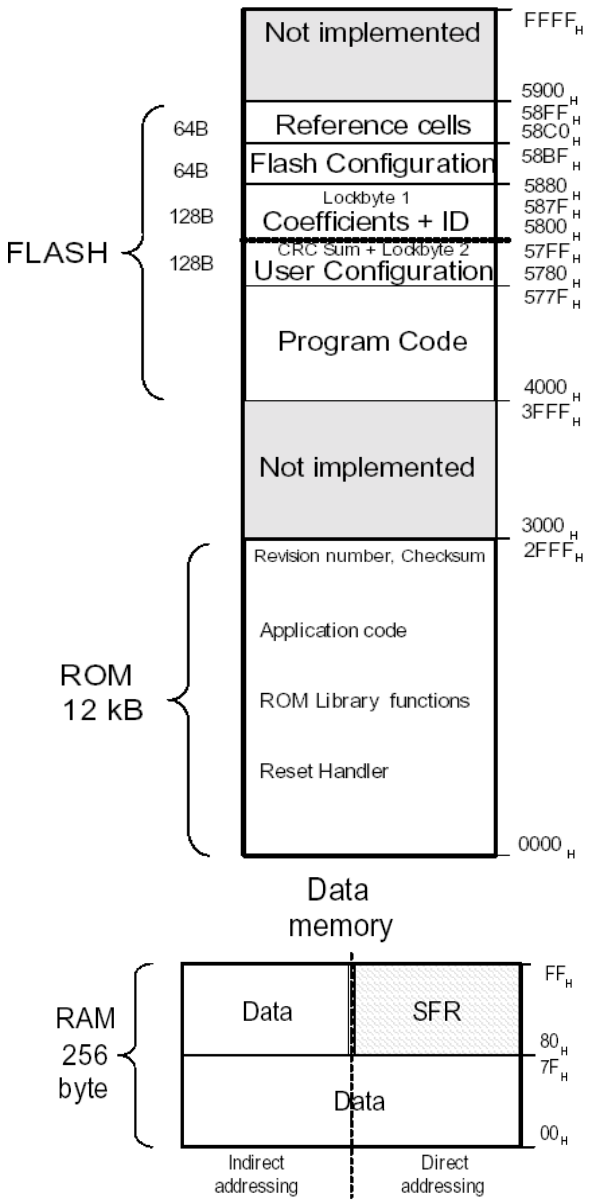

SP37 Benefits to Customer

- System cost savings
  - integration of TPM Sensor and RF transmitter in single package
  - integration of crystal pulling capacitor
  - small number of external components required for complete system
- Rapid Development Cycle
  - complete software development environment
  - 6KB FLASH memory avoids need to spend time “crunching code”
  - commonly needed functions already included in on-chip ROM library
- Energy Efficiency
  - on-chip system controller manages power savings modes
  - very low standby current for long battery life
  - powerful wakeup logic (GPIO, LF Signal, Interval Timer)

SP37 Sensor System

- **Powerful Sensor System**
  - Sensor Measurement
    - Pressure measurement
      - Supported by ROM Library function call
      - Returns compensated pressure value
    - Acceleration measurement
      - Supported by ROM Library function call
      - Returns compensated acceleration value
    - Temperature measurement
      - Supported by ROM Library function call
      - Returns compensated temperature value
    - Supply Voltage measurement
      - Supported by ROM Library function call
      - Returns compensated voltage value
  - ADC Selftest
    - Supported by ROM Library function call
  - Sensor Integrity Check
    - Supported by ROM Library function call
    - Return status flag
  - Bond Wire Surveillance
    - Supported by ROM Library function call
    - Returns status flag

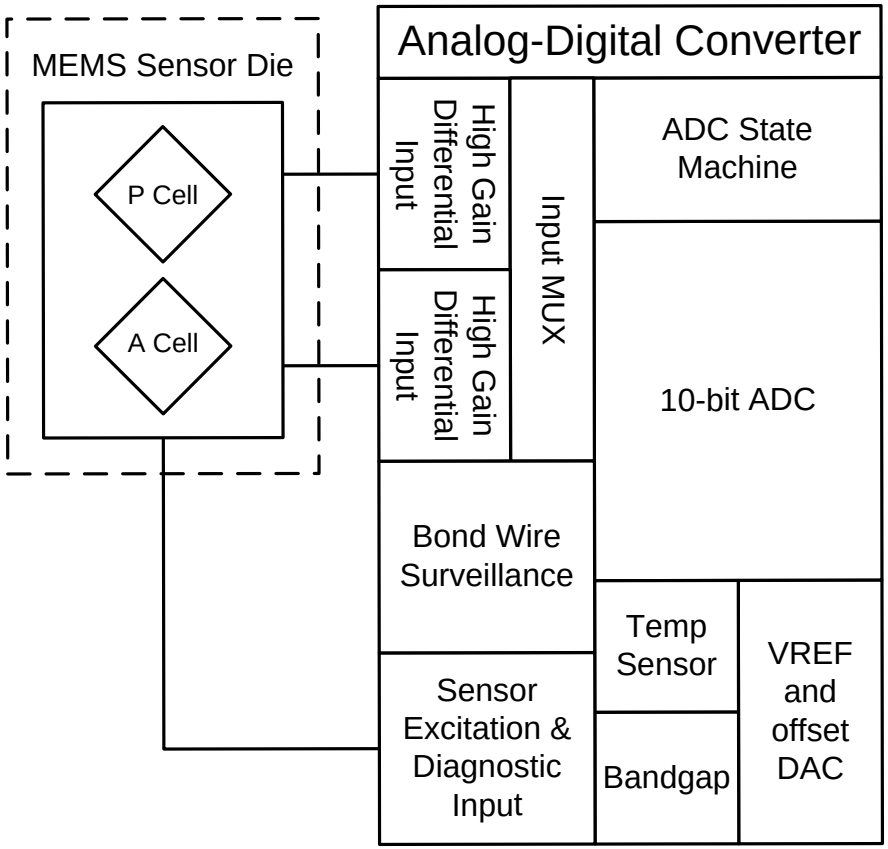

SP37 UHF Transmitter Details

- **Multi-Band UHF Transmitter**
  - 315 and 434 MHz bands
    - One PLL supports both bands of operation
    - PLL Monitoring
    - Two power classes (+5/8 dBm nominal)
    - Overcritical "class C" output stage
  - Crystal Oscillator
    - Software trimming of RF center frequency
    - Integrated crystal load capacitor
  - ASK and FSK Modulation
    - Software trimming of FSK deviation
    - FSK deviation up to +/-50kHz
  - Data Encoder
    - Manchester and Bi-Phase to 20kb/s
    - "Chip" encoding supports PWM, NRZ, etc.
    - Simple UART-like interface to CPU
    - RF bitrate controlled by Timer 1
    - CPU can be idled during RF transmission

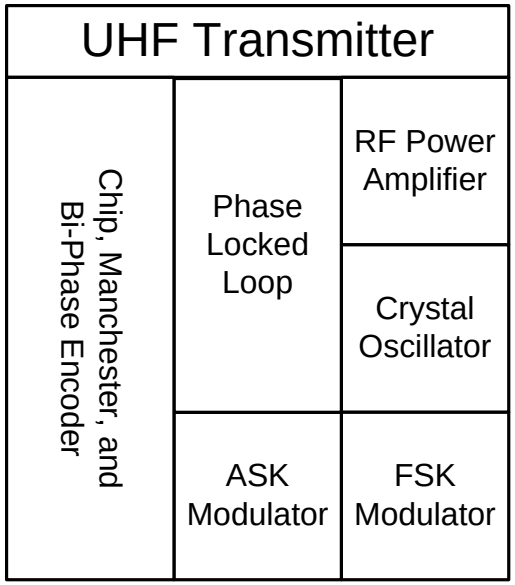

SP37 LF Receiver Details

- **125 KHz Low Power Low-Frequency (LF) Receiver**
  - TPMS High Sensitive ASK Receiver
    - Sensitive analog frontend amplifier
    - Automatic Gain Control (AGC) feature
  - LF Carrier Detector
    - Optional CPU wakeup on LF carrier
    - Programmable carrier detector filter response
    - Self-calibrating threshold detector
  - Digital Baseband Data Decoder
    - May be configured to wakeup CPU on LF sync
    - Manchester or Bi-Phase, 3.92Kb/s
    - Simple UART-like interface to CPU
    - "Chip" decoding supports special wakeup patterns
  - Dedicated LF Polling Interval Timer
    - Allows LF polling without CPU intervention
    - Programmable ON and OFF polling times
  - RC LF Oscillator
    - Low Power RC LF Oscillator
    - Allows Low Power Digital Baseband functionality

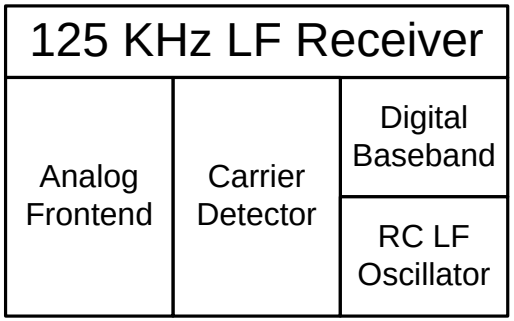

SP37 ROM Firmware Library

- **ROM Firmware Library Routine Examples**
  - Sensor Measurement
    - Compensated Pressure measurement Library Function
    - Compensated Acceleration measurement Library Function
    - Compensated Temperature measurement Library Function
    - Compensated Supply Voltage measurement Library Function
  - Interval Timer and LF On/Off Timer Calibration
    - Interval timer can be calibrated to between 50mS…1S resolution
    - LF On/Off Timer is calibrated to 50mS resolution
    - Can be calibrated from Crystal or 12 MHz RC oscillator source
  - Data Security
    - CRC8 calculation Library Function
  - Fault Protection
    - ADC Selftest
    - 12 MHz Clock check

SP37 Application Schematic Example

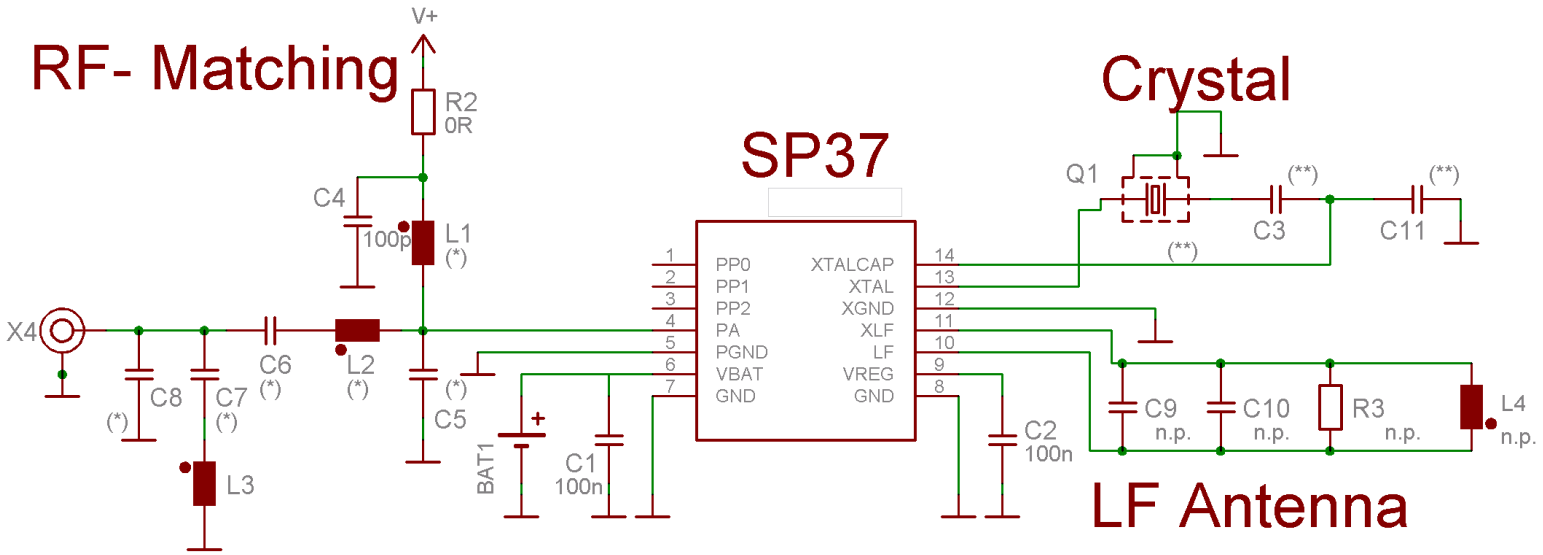

Notes: C3 and C4 are optional pulling capacitors

SP37 Development Kit

- Quick-start development kit
  - Device operating at 315 MHz or 433.92 MHz
  - Real time debugging
  - USB interface for programming
  - Digital I/O for further experiments / RS232 Interface

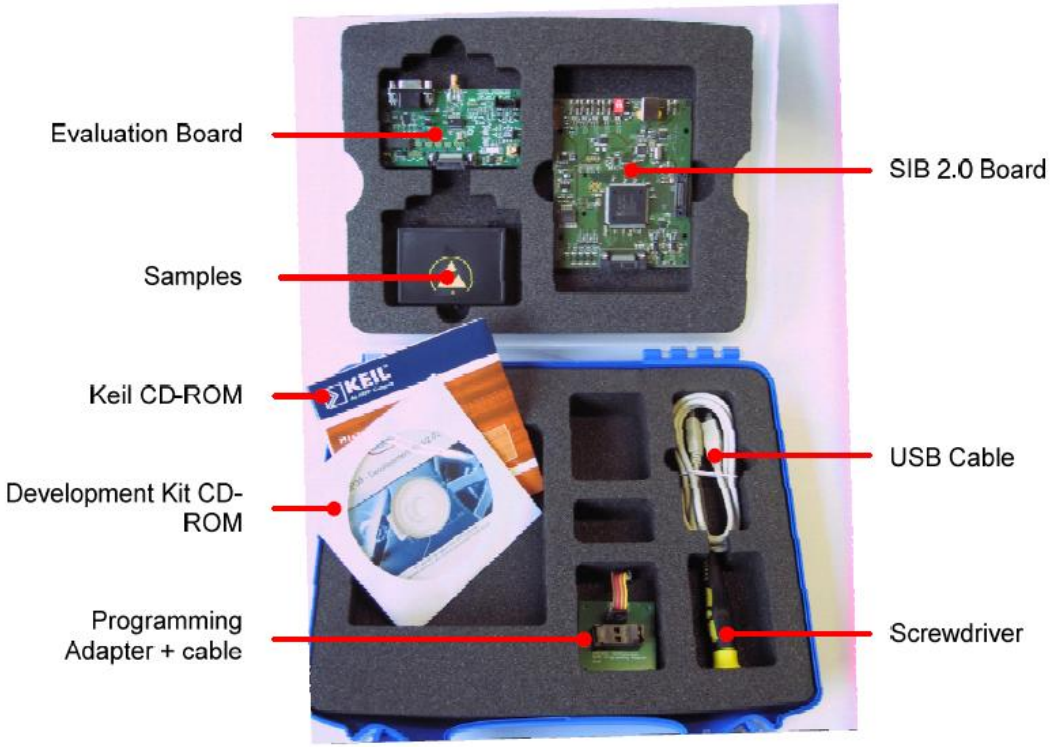

SP37 Development Kit

- SP37 Development RF Kit is Available in two “flavors”
  - Operating frequency of 315 MHz or 433.92 MHz
  - Output power of 8dBm
- Complete and “Ready to go” out of the box
  - CD with Windows drivers and documentation
  - Sample code provided
- Capability Highlights
  - Download and debug code in FLASH via USB
  - 50-ohm SMA output connector facilitates RF testing
  - SMA input connector /placeholders for antenna facilitates LF testing
  - RS232 Interface allows easy input to PC

SP37 Timeline

- Engineering Samples available — available
- Samples for Qualification available — available
- Qualified samples — available

- Development kit for SP37 — available, price 1800 Euro

- SP37 Target Datasheet V1.0 — available

- SP37 Target ROM Library Guide V0.3 — available

- Application Notes:
  - RF Baudrate Timer — available
  - RF Transmitter Usage — available
  - Interval Timer Calibration — availalbe
  - Programming Guide — in work