Never stop thinking

NovalithIC™ H-Bridge Demo Board

Version 2.2 (BTN89xxTA)

Demo Board Description

V1.0, 2011-09-23

Automotive Power

Figure 1 Demo board (top view)

1 General Description

The NovalithIC H-Bridge/Dual-Halfbridge Demo Board contains two NovalithICs used as two half-bridges or in a typical H-bridge configuration including peripheral components and reverse polarity protection. Control signals can be supplied via a 26 pin header connector. The board is suitable for all members of the NovalithIC family (BTN89xxTA).

1.1 Layout Considerations

Special care has been taken to the PCB layout to minimize stray inductances in the power bridge design as it is necessary in all switched high power bridges. The NovalithIC™ has no separate pin for power ground and logic ground. Therefore it is recommended to assure that the offset between the ground connection of the slew rate resistor, the current sense resistor and ground pin of the device (GND / pin 1) is minimized. The voltage offset between the GND pins of the two half bridges should be small as well. In this board this is achieved by positioning the two NovalithICs in a way that the GND pins are facing each other and by routing the high current traces from the 470µF supply capacitor to the bridges so that the area spanned by the loop is as small as possible.

A ceramic capacitor from VS to GND close to each half bridge is implemented to provide current for the switching phase via a low inductance path and therefore reducing noise and ground bounce. The digital inputs are protected from excess currents (e.g. caused by induced voltage spikes) by 10 kΩ series resistors.

1.2 Connector Pin Assignment

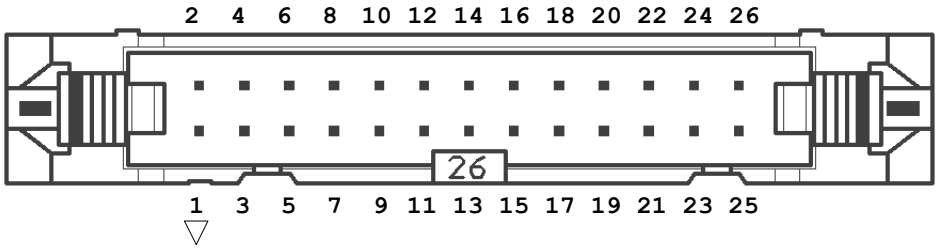

Figure 2 Header connector (top view)

Pin	Signal	Description
1	IN1	Input of IC1
2	INH1	Inhibit of IC1
3	IN2	Input of IC2
4	INH2	Inhibit of IC2
17	R_ID	Output of “board id” voltage divider
18	AGND	Analog GND
20	GND	GND
21	IS2	Current sense of IC2
22	VBAT	VBAT going to control board / starter kit
23	IS1	Current sense of IC1
24	5V	5V coming from control board / starter kit
25	GND	GND
26	GND	GND
others	NC	Not connected

1.3 Jumper Settings

Jumper	Description
JP1	Connects INH1 and INH2 Default: connected
JP2	Current sense output IC1 (IS1) Pos.1: IS1 connected to IS2 (pin 1-2) Pos.2: IS1 and IS2 routed separately (pin 3-4) Default: Pos. 2

1.4 Board ID

The NovalithIC H-Bridge Demo Board features a voltage divider formed by the resistors R10 and R11, which can be used to distinguish between different types of demo boards. The input voltage for this divider (pin 24 on the 26 pin header connector) has to be supplied by the controller board or starter kit. The output of the divider (pin 17) can be connected to an analog input of the microcontroller. Based on the measured voltage the controller can then determine which type of board is connected.

When choosing the values of R10 and R11 it has to be considered that the voltage divider is drawing current from the controller board supply. Therefore the sum of these resistors should be high in order to minimize this current.

By default the board is delivered with R10=open and R11=0Ω.

2 Schematic

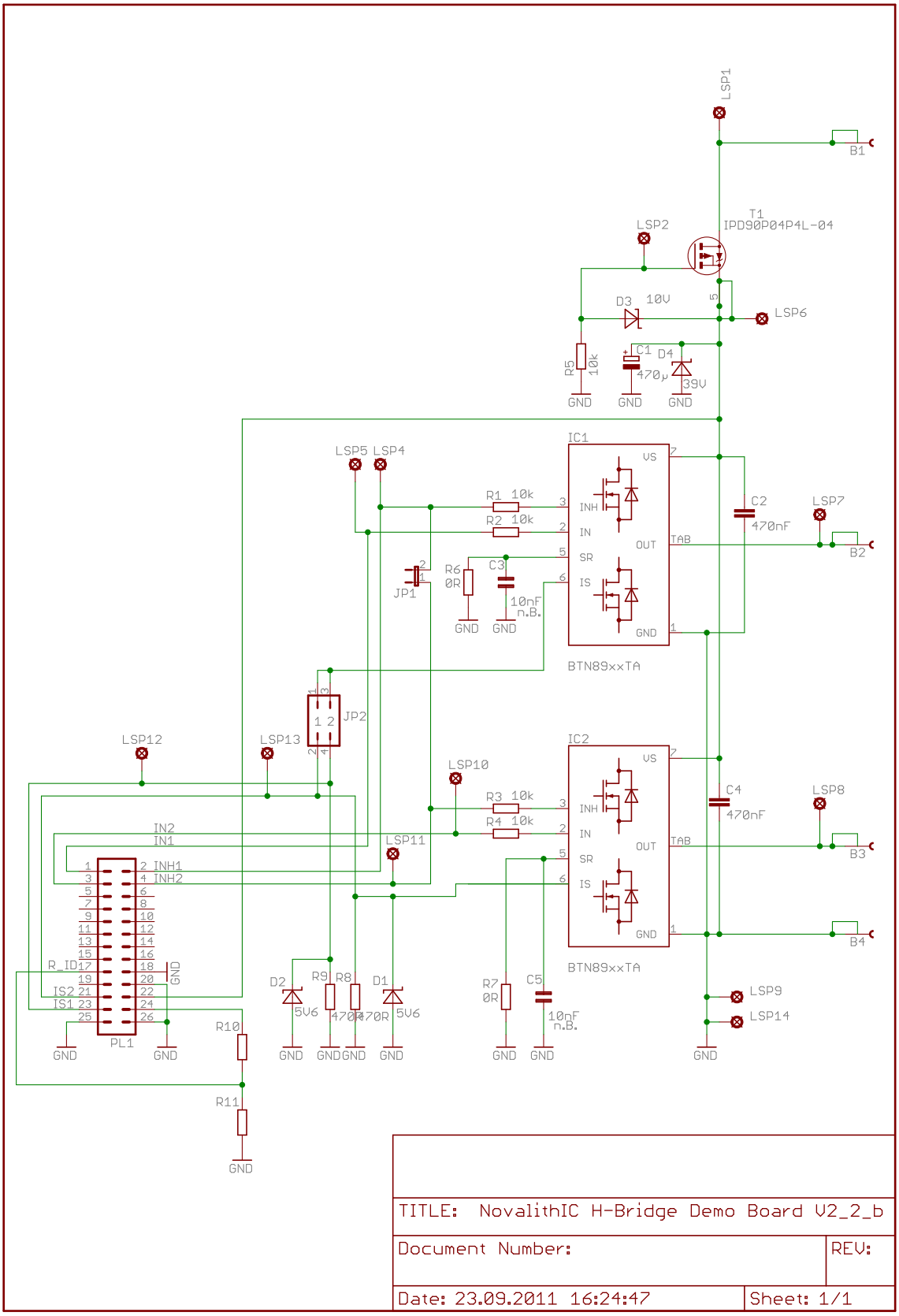

Figure 3 Schematic

3 Top Layer

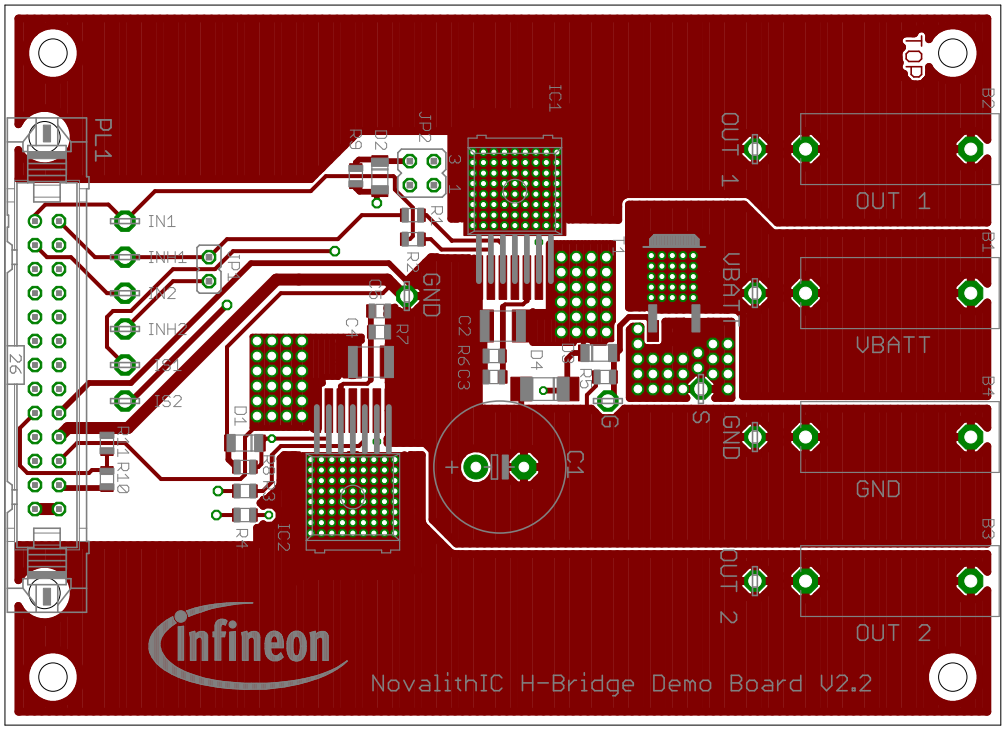

Figure 4 **Top layer**

4 Bottom Layer

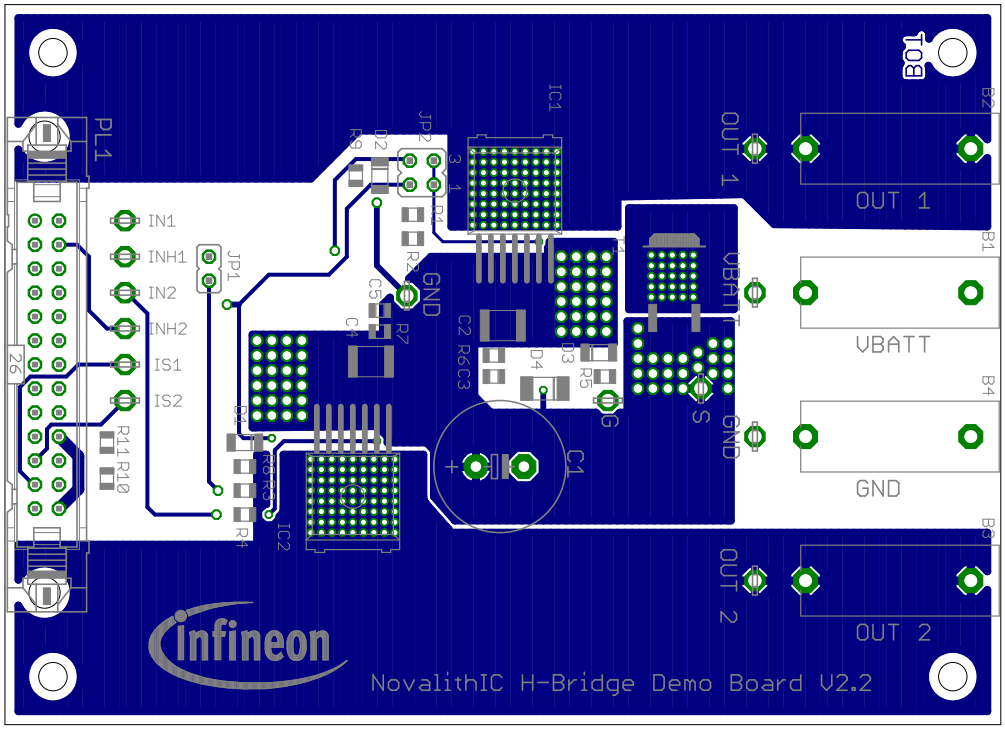

Figure 5 **Bottom layer**

5 Revision History

NovalithIC™

Revision History: V1.0, 2011-09-23

Edition 2011-09-23

Published by
Infineon Technologies AG
81726 Munich, Germany

© 2011 Infineon Technologies AG
All Rights Reserved.

LEGAL DISCLAIMER

THE INFORMATION GIVEN IN THIS APPLICATION NOTE IS GIVEN AS A HINT FOR THE IMPLEMENTATION OF THE INFINEON TECHNOLOGIES COMPONENT ONLY AND SHALL NOT BE REGARDED AS ANY DESCRIPTION OR WARRANTY OF A CERTAIN FUNCTIONALITY, CONDITION OR QUALITY OF THE INFINEON TECHNOLOGIES COMPONENT. THE RECIPIENT OF THIS APPLICATION NOTE MUST VERIFY ANY FUNCTION DESCRIBED HEREIN IN THE REAL APPLICATION. INFINEON TECHNOLOGIES HEREBY DISCLAIMS ANY AND ALL WARRANTIES AND LIABILITIES OF ANY KIND (INCLUDING WITHOUT LIMITATION WARRANTIES OF NON-INFRINGEMENT OF INTELLECTUAL PROPERTY RIGHTS OF ANY THIRD PARTY) WITH RESPECT TO ANY AND ALL INFORMATION GIVEN IN THIS APPLICATION NOTE.

Information

For further information on technology, delivery terms and conditions and prices, please contact the nearest Infineon Technologies Office (**www.infineon.com**).

Warnings

Due to technical requirements, components may contain dangerous substances. For information on the types in question, please contact the nearest Infineon Technologies Office.

Infineon Technologies components may be used in life-support devices or systems only with the express written approval of Infineon Technologies, if a failure of such components can reasonably be expected to cause the failure of that life-support device or system or to affect the safety or effectiveness of that device or system. Life support devices or systems are intended to be implanted in the human body or to support and/or maintain and sustain and/or protect human life. If they fail, it is reasonable to assume that the health of the user or other persons may be endangered.

w w w . i n f i n e o n . c o m

Published by Infineon Technologies AG

Doc_Number