XMC7000 microcontroller

32-bit Arm® Cortex®-M7

General description

XMC7100 is a family of XMC7000 microcontrollers targeted at Industrial applications. XMC7100 has one or two Arm® Cortex®-M7 CPUs for primary processing, and an Arm® Cortex®-M0+ CPU for peripheral and security processing. These devices contain embedded peripherals supporting Controller Area Network with Flexible Data rate (CAN FD) and Ethernet. XMC7000 devices are manufactured on an advanced 40-nm process. XMC7100 incorporates Infineon's low-power flash memory, multiple high-performance analog and digital peripherals, and enables the creation of a secure computing platform.

Features

- **CPU subsystem**
  - One or two[1] 250-MHz 32-bit Arm® Cortex®-M7 CPUs, each with
    - Single-cycle multiply
    - Single/double-precision floating point unit (FPU)
    - 16-KB data cache, 16-KB instruction cache
    - Memory Protection Unit (MPU)
    - 16-KB instruction and 16-KB data Tightly-Coupled Memories (TCM)
  - 100-MHz 32-bit Arm® Cortex® M0+ CPU with
    - Single-cycle multiply
    - MPU
  - Inter-processor communication in hardware
  - Three DMA controllers
    - Peripheral DMA controller #0 (P-DMA0, DW0) with 100 channels
    - Peripheral DMA controller #1 (P-DMA1, DW1) with 58 channels
    - Memory DMA controller (M-DMA0, DMAC0) with 8 channels
- **Integrated memories**
  - Up to 4160 KB of code-flash with an additional up to 256 KB of work-flash
    - Read-While-Write (RWW) allows updating the code-flash/work-flash while executing from it
    - Single- and dual-bank modes (specifically for Firmware update Over The Air (FOTA))
    - Flash programming through SWD/JTAG interface
  - Up to 768 KB of SRAM with selectable retention granularity
- **Cryptography engine**
  - Supports Enhanced Secure Hardware Extension (eSHE) and Hardware Security Module (HSM)
  - Secure boot and authentication
    - Using digital signature verification
    - Using fast secure boot
  - AES: 128-bit blocks, 128-/192-/256-bit keys
  - 3DES: 64-bit blocks, 64-bit key
  - Vector unit supporting asymmetric key cryptography such as Rivest-Shamir-Adleman (RSA) and Elliptic Curve (ECC)
  - SHA-1/2/3: SHA-512, SHA-256, SHA-160 with variable length input data
  - CRC: supports CCITT CRC16 and IEEE-802.3 CRC32
  - True Random Number Generator (TRNG) and Pseudo Random number Generator (PRNG)
  - Galois/counter mode (GCM)

Note
1. For more information, see **"Ordering information"** on page 190.

- **Safety for application**
  - Memory protection unit (MPU)
  - Shared memory protection unit (SMPU)
  - Peripheral protection unit (PPU)
  - Watchdog timer (WDT)
  - Multi-Counter watchdog timer (MCWDT)
  - Low-voltage detector (LVD)
  - Brownout detection (BOD)
  - Overvoltage detection (OVD)
  - Clock supervisor (CSV)
  - Hardware error correction (SECDED ECC) on all safety-critical memories (SRAM, flash, TCM)
- **Low-power 2.7 V to 5.5V operation**
  - Low-power Active, Sleep, Low-power Sleep, Deep Sleep, and Hibernate modes for fine-grained power management
  - Configurable options for robust BOD
    - Two threshold levels (2.7 V and 3.0 V) for BOD on V_{DDD} and V_{DDA}
    - One threshold level (1.1 V) for BOD on V_{CCD}
- **Wakeup**
  - Up to two pins to wake from Hibernate mode
  - Up to 220 GPIO pins to wake from Sleep modes
  - Event Generator, SCB, watchdog Timer, RTC alarms to wake from Deep Sleep modes
- **Clocks**
  - Internal main oscillator (IMO)
  - Internal low-speed oscillator (ILO)
  - External crystal oscillator (ECO)
  - Watch crystal oscillator (WCO)
  - Phase-locked loop (PLL)
  - Frequency-locked loop (FLL)
- **Communication interfaces**
  - Up to eight CAN FD channels
    - Increased data rate (up to 8 Mbps) compared to classic CAN, limited by physical layer topology and transceivers
    - Compliant with ISO 11898-1:2015
    - Supports all the requirements of Bosch CAN FD Specification V1.0 for non-ISO CAN FD
    - ISO 16845:2015 certificate available
  - Up to 11 runtime-reconfigurable serial communication block (SCB) channels, each configurable as I^2C, SPI, or UART
  - One 10/100 Mbps Ethernet MAC interface conforming to IEEE-802.3bw
    - Supports the following PHY interfaces: Media-independent interface (MII) and Reduced media-independent interface (RMII)
    - Compliant with IEEE-802.1BA Audio Video Bridging (AVB)
    - Compliant with IEEE-1588 Precision Time Protocol (PTP)
- **External memory interface**
  - One SPI (Single, Dual, Quad, or Octal) or HYPERBUS™ interface
  - On-the-fly encryption and decryption
  - Execute-in-place (XIP) from external memory

- **SDHC interface**
  - One secure digital high capacity (SDHC) interface supporting embedded MultiMediaCard (eMMC), secure digital (SD), or secure digital input output (SDIO)
    - Compliant with eMMC 5.1, SD 6.0, and SDIO 4.10 specifications
  - Data rates up to SD Hi-speed 50 MHz, or eMMC 52-MHz DDR
- **Audio interface**
  - Three inter-IC sound (I^2S) interface for connecting digital audio devices
  - I^2S, left justified, or time division multiplexed (TDM) audio formats
  - Independent transmit or receive operation, each in master or slave mode
- **Timers**
  - Up to 75 16-bit and eight 32-bit Timer/Counter Pulse-Width Modulator (TCPWM) blocks
    - Up to twelve 16-bit counters for motor control
    - Up to 63 16-bit counters and eight 32-bit counters for regular operations
    - Supports timer, capture, quadrature decoding, pulse-width modulation (PWM), PWM with dead time (PWM_DT), pseudo-random PWM (PWM_PR), and Shift register (SR) modes
  - Up to sixteen event generation (EVTGEN) timers supporting cyclic wakeup from Deep Sleep
    - Events trigger a specific device operation (such as execution of an interrupt handler, a SAR ADC conversion, and so on)
- **Real time clock (RTC)**
  - Year/Month/Date, Day-of-week, Hour:Minute:Second fields
  - 12- and 24-hour formats
  - Automatic leap-year correction
- **I/O**
  - Up to 220 programmable I/Os
  - Three I/O types
    - GPIO standard (GPIO_STD)
    - GPIO enhanced (GPIO_ENH)
    - High-Speed I/O standard (HSIO_STD)
- **Regulators**
  - Generate a 1.1-V nominal core supply from a 2.7-V to 5.5-V input supply
  - Three regulators:
    - Deep Sleep
    - Core internal
    - Core external
- **Programmable analog**
  - Three SAR A/D converters with up to 75 external channels (72 I/Os + 3 I/Os for motor control)
    - ADC0 supports 32 logical channels, with 32 + 1 physical connections
    - ADC1 supports 32 logical channels, with 32 + 1 physical connections
    - ADC2 supports 8 logical channels, with 8 + 1 physical connections
    - Any external channel can be connected to any logical channel in the respective SAR
  - Each ADC supports 12-bit resolution and sampling rates of up to 1 Msps
  - Each ADC also supports six internal analog inputs like
    - Bandgap reference to establish absolute voltage levels
    - Calibrated diode for junction temperature calculations
    - Two AMUXBUS inputs and two direct connections to monitor supply levels
  - Each ADC supports addressing of external multiplexers
  - Each ADC has a sequencer supporting autonomous scanning of configured channels
  - Synchronized sampling of all ADCs for motor-sense applications

- **Smart I/O**
  - Up to five Smart I/O blocks, which can perform Boolean operations on signals going to and from I/Os
  - Up to 36 I/Os (GPIO_STD) supported
- **Debug interface**
  - JTAG controller and interface compliant to IEEE-1149.1-2001
  - Arm® Serial Wire Debug (SWD) port
  - Supports Arm® Embedded Trace Macrocell (ETM) Trace
    - Data trace using SWD
    - Instruction and data trace using JTAG
- **Industry advanced development tools**
  - Infineon IDE ModusToolbox™ software for code development and debugging
- **Packages**
  - 100-TEQFP, 14 × 14 × 1.6 mm (max), 0.5-mm lead pitch
  - 144-TEQFP, 20 × 20 × 1.6 mm (max), 0.5-mm lead pitch
  - 176-TEQFP, 24 × 24 × 1.6 mm (max), 0.5-mm lead pitch
  - 272-BGA, 16 × 16 × 1.7 mm (max), 0.8-mm ball pitch

Table of contents

General description **1**
Features **1**
Table of contents **5**
1 Features list **7**
1.1 Communication peripheral instance list 9
2 Blocks and functionality **10**
2.1 Architecture block diagram 10
3 Functional description **11**
3.1 CPU subsystem 11
3.2 System resources 12
3.3 Peripherals 16
3.4 I/Os 19
4 XMC7100 address map **21**
5 Flash base address map **23**
6 Peripheral I/O map **24**
7 XMC7100 clock diagram **26**
8 XMC7100 CPU start-up sequence **27**
9 Pin assignment **28**
10 Hi-speed I/O matrix connections **35**
11 Package pin list and alternate functions **36**
12 Power pin assignments **45**
13 Alternate function pin assignments **46**
13.1 Pin function description 58
14 Interrupts and wake-up assignments **61**
15 Core interrupt types **71**
16 Trigger multiplexer **72**
17 Triggers group inputs **74**
18 Triggers group outputs **78**
19 Triggers one-to-one **79**
20 Peripheral clocks **85**
21 Faults **88**
22 Peripheral protection unit fixed structure pairs **93**
23 Bus masters **108**
24 Miscellaneous configuration **109**
25 Development support **111**
25.1 Documentation 111
25.2 Tools 111
26 Electrical specifications **112**
26.1 Absolute maximum ratings 112
26.2 Device-level specifications 120
26.3 Smoothing capacitor recommendations 121
26.4 DC specifications 122
26.5 Reset specifications 128
26.6 I/O 129
26.7 Analog peripherals 135
26.8 AC specifications 140
26.9 Digital peripherals 141
26.10 Memory 149
26.11 System resources 152
26.12 Clock specifications 162
26.13 **Clock timing diagrams** **169**

26.14 Ethernet specifications 170
26.15 SDHC specifications 173
26.16 Audio subsystem specifications 178
26.17 Serial memory interface specifications 183
27 Ordering information 190
27.1 Part number nomenclature 190
28 Packaging 191
29 Appendix 195
29.1 Bootloading or end-of-line (EoL) programming 195
29.2 External IP revisions 196
30 Acronyms 197
31 Errata 199
Revision history 213

1 Features list

Table 1 XMC7100 feature list

Features	Packages			
	100-TEQFP	**144-TEQFP**	**176-TEQFP**	**272-BGA**
CPU				
Core	One or two 32-bit Arm® Cortex®-M7 CPUs and a 32-bit Arm® Cortex® M0+ CPU			
Operating voltage	2.7 V to 5.5 V			
Operating voltage for HSIO_STD	Not supported			2.7 V to 3.6 V
Core voltage	1.05 V to 1.15 V			
Operating frequency	Arm® Cortex®-M7 250 MHz (max for each) and Arm® Cortex®-M0+ 100 MHz (max)			
MPU, PPU	Supported			
FPU	Supports both single (32-bit) and double (64-bit) precision			
DSP-MUL/DIV/MAC	Supported by Arm® Cortex®-M7 CPUs			
TCM	16-KB instruction and 16-KB data for each Cortex®-M7 CPU			
Memory				
Code flash	1088 KB (960 KB + 128 KB) / 2112 KB (1984 KB + 128 KB) / 4160 KB (4032 KB + 128 KB)[2]			
Work flash	128 KB (96 KB + 32 KB) / 256 KB (192 KB + 64 KB)[2]			
SRAM (configurable for retention)	192 KB / 384 KB / 768 KB[2]			
ROM	64 KB			
Communication interfaces				
CAN0 (CAN-FD: Up to 8 Mbps)	4 ch			
CAN1 (CAN-FD: Up to 8 Mbps)	4[3]/3[4] ch	4 ch		
CAN RAM	32 KB per instance (CAN0/1), 64 KB in total			
Serial Communication Block (SCB/UART)	9 ch	10 ch		11 ch
Serial Communication Block (SCB/I^2C)	9[5]/8[6] ch	10 ch		11 ch
Serial Communication Block (SCB/SPI)	8 ch	10 ch		11 ch
Ethernet MAC	1 ch × 10/100 (ETH0, MII/RMII on GPIO_STD)			
Memory interfaces				
eMMC/SD	1 ch (GPIO_STD at 32 MHz)			1 ch (HSIO_STD at 50 MHz, GPIO_STD at 32 MHz)
Single SPI / Dual SPI / Quad SPI / Octal SPI / HYPERBUS™	1 ch (GPIO_STD at 32 MHz)			1 ch (HSIO_STD at 100 MHz, GPIO_STD at 32 MHz)
Timers				
RTC	1 ch			
TCPWM (16-bit) (motor control)	12 ch			

Notes
2. For more information, see **"Ordering information"** on page 190.
3. Function EXT_PS_CTL0 on P22.1 is not used.
4. Function EXT_PS_CTL0 on P22.1 is used.
5. Functions EXT_PS_CTL0 on P21.1 and EXT_PS_CTL1 on P21.2 are not used.
6. Function EXT_PS_CTL0 on P21.1 or EXT_PS_CTL1 on P21.2 is used.
7. Enhanced Secure Hardware Extension (eSHE) and Hardware Security Module (HSM) support are enabled by third-party firmware.

Table 1 XMC7100 feature list

Features	Packages			
	100-TEQFP	**144-TEQFP**	**176-TEQFP**	**272-BGA**
TCPWM (16-bit)	63 ch			
TCPWM (32-bit)	8 ch			
External interrupts	72	116	148	220
Analog				
12-bit, 1 Msps SAR ADC	3 units (SAR0/32, SAR1/32, SAR2/8 logical channels)			
	37 external channels (SAR0/14 ch, SAR1/15 ch, SAR2/8 ch)	52 external channels (SAR0/21 ch, SAR1/23 ch, SAR2/8 ch)	64 external channels (SAR0/24 ch, SAR1/32 ch, SAR2/8 ch)	72 external channels (SAR0/32 ch, SAR1/32 ch, SAR2/8 ch)
	18 ch (6 per ADC) Internal sampling			
Motor control input	3 ch (synchronous sampling of one channel on each of the 3 ADCs)			
Security				
Flash Security (program/work read protection)	Supported			
Flash chip erase enable	Configurable			
eSHE / HSM	By separate firmware[7]			
Audio				
I^2S / TDM	Tx 2 ch, Rx 2 ch	Tx 3 ch, Rx 3 ch		
System				
DMA controller	P-DMA0 with 100 channels (16 general-purpose), P-DMA1 with 58 channels (8 general-purpose), and M-DMA0 with 8 channels			
Internal main oscillator	8 MHz			
Internal low-speed oscillator	32.768 kHz (nominal)			
PLL	Input: 3.988 to 33.34 MHz, PLL output: up to 250 MHz			
FLL	Input: 0.25 to 80 MHz, FLL output: up to 100 MHz			
Watchdog timer and Multi-counter Watchdog timer	Supported (WDT + 3 × MCWDT)			
Clock Supervisor	Supported			
Cyclic wakeup from Deep Sleep	Supported			
GPIO_STD	68	112	144	203
GPIO_ENH	4			
HSIO_STD	Not supported			13
Smart I/O (blocks)	3 blocks, mapped through 15 I/Os	5 blocks, mapped through 27 I/Os	5 blocks, mapped through 36 I/Os	
Low-voltage detect	Two, 26 selectable levels			
Maximum ambient temperature	125°C			
Debug interface	SWD/JTAG			
Debug trace	Arm® Cortex®-M7 ETB size of 8 KB, Arm® Cortex® M0+ MTB size of 4 KB			

Notes
2. For more information, see **"Ordering information"** on page 190.
3. Function EXT_PS_CTL0 on P22.1 is not used.
4. Function EXT_PS_CTL0 on P22.1 is used.
5. Functions EXT_PS_CTL0 on P21.1 and EXT_PS_CTL1 on P21.2 are not used.
6. Function EXT_PS_CTL0 on P21.1 or EXT_PS_CTL1 on P21.2 is used.
7. Enhanced Secure Hardware Extension (eSHE) and Hardware Security Module (HSM) support are enabled by third-party firmware.

1.1 Communication peripheral instance list

Table 1 lists the instances supported under each package for communication peripherals, based on the minimum pins needed for the functionality.

Table 2 Communication peripheral instance list

Module	100-TEQFP	144-TEQFP	176-TEQFP	272-BGA	Minimum pin functions
CAN0	0/1/2/3	0/1/2/3	0/1/2/3	0/1/2/3	TX, RX
CAN1	0/1/2/3[8] or 0/2/3[9]	0/1/2/3	0/1/2/3	0/1/2/3	TX, RX
SCB/UART	0 to 8	0 to 9	0 to 9	0 to 10	TX, RX
SCB/I2C	0 to 8[11] or 0/1/2/3/4/5/7/8[12]	0 to 9	0 to 9	0 to 10	SCL, SDA
SCB/SPI	0/1/2/3/4/5/7/8	0 to 9	0 to 9	0 to 10	MISO, MOSI, SCK, SELECT0

Notes

8. For more information, see **"Ordering information"** on page 190.
9. Function EXT_PS_CTL0 on P22.1 is not used.
10. Function EXT_PS_CTL0 on P22.1 is used.
11. Functions EXT_PS_CTL0 on P21.1 and EXT_PS_CTL1 on P21.2 are not used.
12. Function EXT_PS_CTL0 on P21.1 or EXT_PS_CTL1 on P21.2 is used.

2 Blocks and functionality

2.1 Architecture block diagram

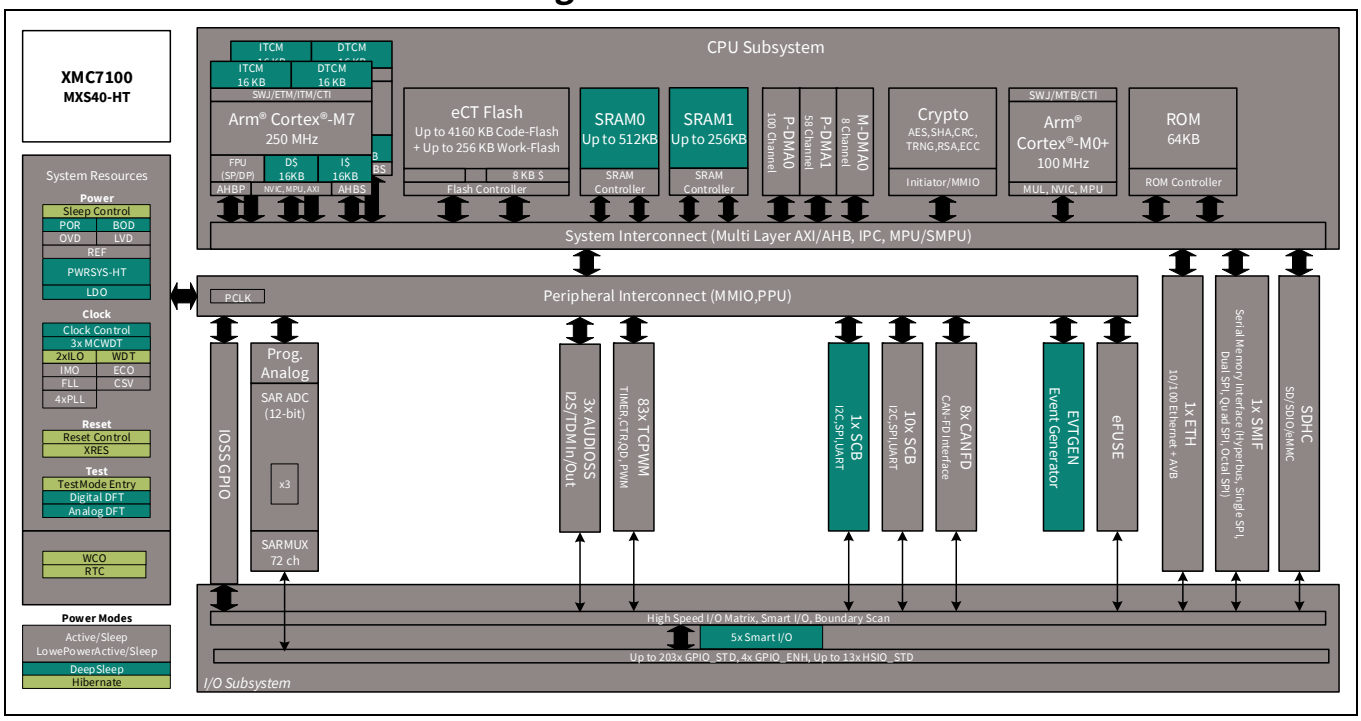

The **Architecture block diagram** shows a simplified view of the interconnection between subsystems and blocks. XMC7100 has four major subsystems: CPU, system resources, peripherals, and I/O[13, 14, 15]. The color-coding shows the lowest power mode where the particular block is still functional.

XMC7100 provides extensive support for programming, testing, debugging, and tracing of both hardware and firmware.

Debug-on-chip functionality enables in-system debugging using the production device. It does not require special interfaces, debugging pods, simulators, or emulators.

The JTAG interface is fully compatible with industry-standard third-party probes such as I-jet and J-Link.

The debug circuits are enabled by default.

XMC7100 provides a high level of security with robust flash protection and the ability to disable features such as debug.

Additionally, each device interface can be permanently disabled for applications concerned with phishing attacks from a maliciously reprogrammed device or attempts to defeat security by starting and interrupting flash programming sequences. All programming, debug, and test interfaces are disabled when maximum device security is enabled.

Notes

13. GPIO_STD supports 2.7 V to 5.5 V V_{DDIO} range.
14. GPIO_ENH supports 2.7 V to 5.5 V V_{DDIO} range with higher currents at lower voltages.
15. HSIO_STD supports 2.7 V to 3.6 V V_{DDIO} range with high-speed signalling and programmable drive strength.

3 Functional description

3.1 CPU subsystem

3.1.1 CPU

The XMC7100 CPU subsystem contains a 32-bit Arm® Cortex®-M0+ CPU with MPU, and one or two 32-bit Arm® Cortex®-M7 CPUs, each with MPU, single/double-precision FPU, and 16-KB data and instruction caches. This subsystem also includes P-/M-DMA controllers, a cryptographic accelerator, up to 4160 KB of code-flash, up to 256 KB of work-flash, up to 768 KB of SRAM, and 64 KB of ROM.

The Cortex®-M0+ CPU provides a secure, un-interruptible boot function. This guarantees that, following completion of the boot function, system integrity is valid and privileges are enforced. Shared resources (flash, SRAM, peripherals, and so on) can be accessed through bus arbitration, and exclusive accesses are supported by an inter-processor communication (IPC) mechanism using hardware semaphores.

Each Cortex-M7 CPU has 16 KB of instruction and 16 KB of data TCM with programmable read wait states. Each TCM is clocked by the associated Cortex-M7 CPU clock.

3.1.2 DMA controllers

XMC7100 has three DMA controllers: P-DMA0 with 16 general-purpose and 84 dedicated channels, P-DMA1 with 8 general-purpose and 50 dedicated channels, and M-DMA0 with eight channels. P-DMA is used for peripheral-to-memory and memory-to-peripheral data transfers and provides low latency for a large number of channels. Each P-DMA controller uses a single data-transfer engine that is shared by the associated channels. General-purpose channels have a rich interconnect matrix including P-DMA cross triggering which enables demanding data-transfer scenarios. Dedicated channels have a single triggering input (such as an ADC channel) to handle common transfer needs. M-DMA is used for memory-to-memory data transfers and provides high memory bandwidth for a small number of channels. M-DMA uses a dedicated data-transfer engine for each channel. They support independent accesses to peripherals using the AHB multi-layer bus.

3.1.3 Flash

XMC7100 has 1088 KB (960 KB with a 32-KB sector size, and 128 KB with an 8-KB sector size), 2112 KB (1984 KB with a 32-KB sector size, and 128 KB with an 8-KB sector size) or 4160 KB (4032 KB with a 32-KB sector size, and 128 KB with an 8-KB sector size) of code-flash with an additional work-flash of 128 KB (96 KB with a 2-KB sector size, and 32 KB with a 128-B sector size) or 256 KB (192 KB with a 2-KB sector size, and 64 KB with a 128-B sector size). The work-flash is optimized for reprogramming many more times than code-flash. The code-flash supports Read-While-Write (RWW) operation allowing flash to be updated while the CPU is active. Both the code-flash and work-flash areas support dual-bank operation for over-the-air (OTA) programming.

3.1.4 SRAM

XMC7100 has up to 768 KB of SRAM with two independent controllers. SRAM0 provides Deep Sleep retention in 32-KB increments while SRAM1 is selectable between fully retained and not retained.

3.1.5 ROM

XMC7100 has 64 KB of ROM that contains boot and configuration routines. This ROM enables secure boot and authentication of user flash to guarantee a secure system.

3.1.6 Cryptography accelerator for security

The cryptography accelerator implements (3)DES block cipher, AES block cipher, SHA hash, cyclic redundancy check, Pseudo Random Number Generation (PRNG), True Random Number Generation (TRNG), Galois/counter mode, and a vector unit to support asymmetric key cryptography such as RSA and ECC.

3.2 System resources

3.2.1 Power system

The power system ensures that the supply voltage levels meet the requirements of each power mode, and provides a full-system reset when these levels are not valid. Internal power-on reset (POR) guarantees full-chip reset during the initial power ramp.

Three BOD circuits monitor the external supply voltages (V_{DDD}, V_{DDA}, V_{CCD}). The BOD on V_{DDD} and V_{CCD} is initially enabled and cannot be disabled. The BOD on V_{DDA} is initially disabled and can be enabled by the user. For the external supplies V_{DDD} and V_{DDA}, BOD circuits are software-configurable with two settings; a 2.7-V minimum voltage that is robust for all internal signaling, and a 3.0-V minimum voltage, which is also robust for all I/O specifications (which are guaranteed at 2.7 V). The BOD on V_{CCD} is provided as a safety measure and is not a robust detector.

Three overvoltage detection (OVD) circuits are provided for monitoring external supplies (V_{DDD}, V_{DDA}, V_{CCD}), and overcurrent detection circuits (OCD) for monitoring internal and external regulators. OVD thresholds on V_{DDD} and V_{DDA} are configurable with two settings; a 5.0 V and 5.5 V maximum voltage.

Two voltage detection circuits are provided to monitor the external supply voltage (V_{DDD}) for falling and rising levels, each configurable for one of the 26 selectable levels.

All BOD, OVD, and OCD circuits on V_{DDD} and V_{CCD} generate a reset, because these protect the CPUs and fault logic. The BOD and OVD circuits on V_{DDA} can be configured to generate either a reset, or a fault.

3.2.2 Regulators

XMC7100 contains three regulators that provide power to the low-voltage core transistors: Deep Sleep, core internal, and core external. These regulators accept a 2.7-V to 5.5-V V_{DDD} supply and provide a low-noise 1.1-V supply to various parts of the device. These regulators are automatically enabled and disabled by hardware and firmware when switching between power modes. The core internal and core external regulators operate in Active mode, and provide power to the CPU subsystem and associated peripherals.

3.2.2.1 Deep Sleep

The Deep Sleep regulator is used to maintain power in a small number of blocks when in Deep Sleep mode. These blocks include the ILO and WDT timers, BOD detector, SCB0, SRAM memories, Smart I/O, and other configuration memories. The Deep Sleep regulator is enabled when in Deep Sleep mode, and the core internal regulator is disabled. It is disabled when XRES_L is asserted (LOW) and when the core internal regulator is disabled.

3.2.2.2 Core internal

The core internal regulator supports load currents up to 300 mA, and is operational during device start-up (boot process), and in Active/Sleep modes.

3.2.2.3 Core external[16]

To support worst-case loading, with both M7 CPUs and the M0+ CPU at their maximum clock frequency and all integrated peripherals operating, a core external regulator is required, capable of load currents up to 600 mA. While the control and monitor circuits for the core external regulator are internal to XMC7100, the power regulating element (NPN pass transistor, PMIC, or LDO) is external. This reduces the overall power dissipation within the XMC7100 package, while maintaining a well-regulated core supply.

The core external regulator may be implemented with either an external NPN pass transistor, PMIC, or linear regulator (LDO). Each implementation requires different external components on the PCB, and different connections to XMC7100 for both regulation and control.

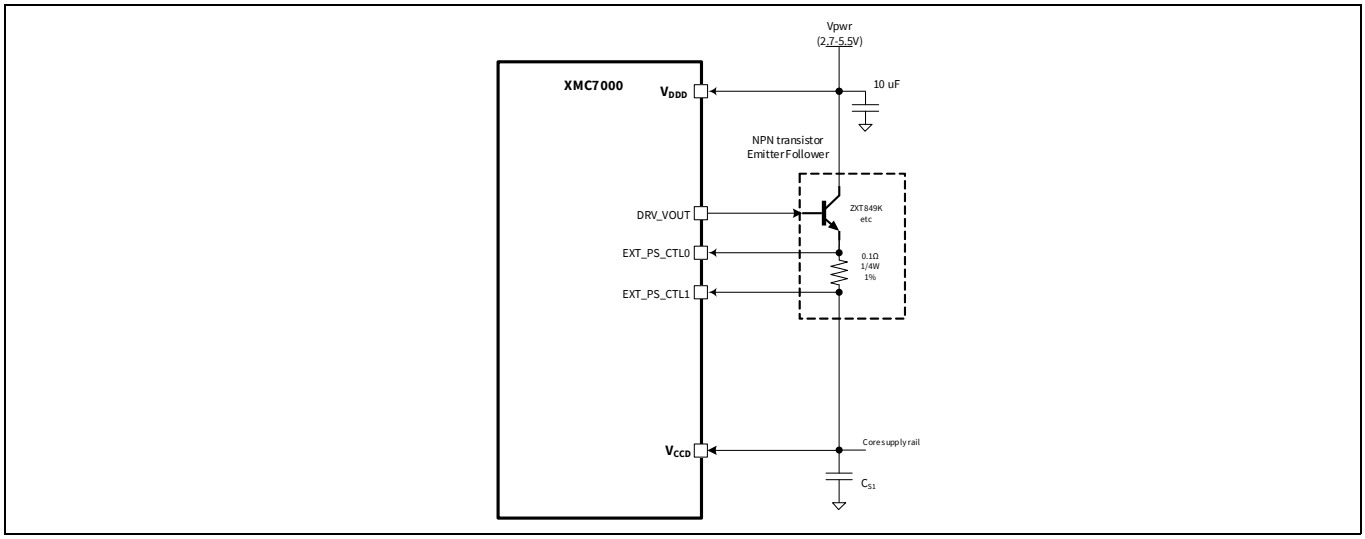

Figure 1 Sample core external regulator with NPN transistor

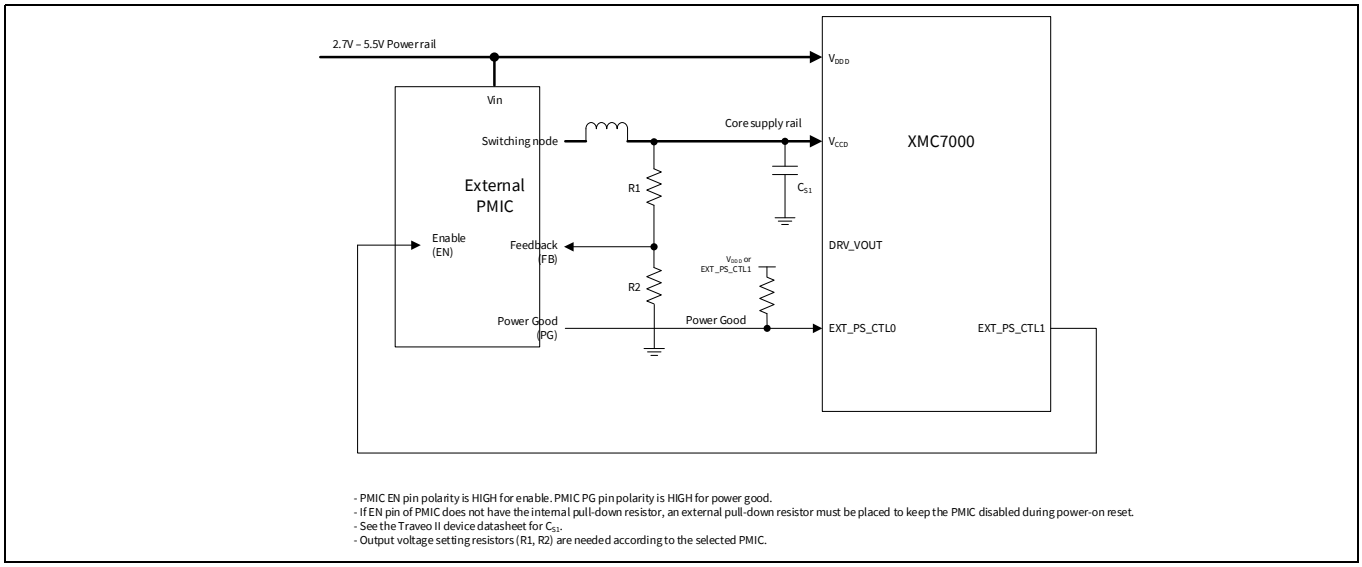

Figure 2 Sample core external regulator with PMIC/LDO

Note

16. When XMC7100 is in Hibernate mode, the GPIO used to control the core external regulator are High-Z. This may require an external pull-up or pull-down resistor to disable the external regulator and configure it for minimum operating current.

Both the core internal and core external regulators require an external bulk storage capacitor connected to the VCCD pin. This capacitor provides charge under the dynamic loads of the low-voltage core transistors.

3.2.3 Clock system

The XMC7100 clock system provides clocks to all subsystems that require them, and glitch-free switching between different clock sources. In addition, the clock system ensures that no metastable conditions occur.

The clock system for XMC7100 consists of the 8 MHz IMO, two ILOs, four watchdog timers, four PLLs, an FLL, five clock supervisors (CSV), a 8- to 33.34-MHz ECO, and a 32.768-kHz WCO.

The clock system supports three main clock domains: CLK_HF, CLK_SLOW, and CLK_LF.

- CLK_HFx are the Active mode clocks. Each can use any of the high-frequency clock sources including IMO, EXT_CLK, ECO, FLL, or PLL
- CLK_SLOW provides a reference clock for the Cortex®-CM0+ CPU, Crypto, P-/M-DMA, and other slow infrastructure blocks of CPU subsystem
- CLK_LF is a Deep Sleep domain clock and provides a reference clock for the MCWDT or RTC modules. The reference clock for the CLK_LF domain is either disabled or selectable from ILO0, ILO1, or WCO.

Table 3 CLK_HF destinations

Name	Description
CLK_HF0	CPUSS (Memories, CLK_SLOW, peripherals)
CLK_HF1	CPUSS (Cortex®-M7 CPU 0, 1)
CLK_HF2	CAN FD, TCPWM, SCB, SAR
CLK_HF3	Event generator
CLK_HF4	Ethernet
CLK_HF5	Audio subsystem (I^2S)
CLK_HF6	SDHC interface, SMIF

3.2.3.1 IMO clock source

The IMO is the frequency reference in XMC7100 when no external reference is available or enabled. The IMO operates at a frequency of around 8 MHz.

3.2.3.2 ILO clock source

An ILO is a low-power oscillator, nominally 32.768 kHz, which generates clocks for a watchdog timer when in Deep Sleep mode. There are two ILOs to ensure clock supervisor (CSV) capability in Deep Sleep mode. ILO-driven counters can be calibrated to the IMO, WCO, or ECO to improve their accuracy. ILO1 is also used for clock supervision.

3.2.3.3 PLL and FLL

A PLL (one of the two 200 MHz and two 400 MHz) or FLL may be used to generate high-speed clocks from the IMO, ECO, or an EXT_CLK. The FLL provides a much faster lock than the PLL (5 µs instead of 45 µs) in exchange for a small amount (±2%) of frequency error[17]. A 400-MHz PLL supports spread spectrum clock generation (SSCG) with down spreading.

Note

17. Operation of reference-timed peripherals (such as a UART) with an FLL-based reference is not recommended due the allowed frequency error.

3.2.3.4 Clock supervisor (CSV)

Each CSV allows one clock (reference) to supervise the behavior of another clock (monitored). Each CSV has counters for both the monitored and reference clocks. Parameters for each counter determine the frequency of the reference clock as well as the upper and lower frequency limits of the monitored clock. If the frequency-range comparator detects a stopped clock or a clock outside the specified frequency range, an abnormal state is signaled and either a reset or an interrupt is generated.

3.2.3.5 EXT_CLK

One of the three GPIO_STD I/Os can be used to provide an external clock input of up to 80 MHz. This clock can be used as the source clock for either the PLL or FLL, or can be used directly by the CLK_HF domain.

3.2.3.6 ECO

The ECO provides high-frequency clocking using an external crystal connected to the ECO_IN and ECO_OUT pins. It supports fundamental mode (non-overtone) quartz crystals, in the range of 8 to 33.34 MHz. When used in conjunction with the PLL, it generates CPU and peripheral clocks up to the device's maximum frequency. ECO accuracy depends on the selected crystal. If the ECO is disabled, the associated pins can be used for any of the available I/O functions.

3.2.3.7 WCO

The WCO is a low-power, watch-crystal oscillator intended for real-time-clock applications. It requires an external 32.768-kHz crystal connected to the WCO_IN and WCO_OUT pins. The WCO can also be configured as a clock reference for CLK_LF, which is the clock source for the MCWDT and RTC.

3.2.4 Reset

XMC7100 can be reset from a variety of sources, including software. Most reset events are asynchronous and guarantee reversion to a known state. The reset cause (POR, BOD, OVD, overcurrent, XRES_L, WDT, MCWDT, software reset, fault, CSV, Hibernate wakeup, debug) is recorded in a register, which is sticky through reset and allows software to determine the cause of the reset. An XRES_L pin is available for external reset.

3.2.5 Watchdog timer

XMC7100 has one watchdog timer (WDT) and three multi-counter watchdog timers (MCWDT).

The WDT is a free-running counter clocked only by ILO0, which allows it to be used as a wakeup source from Hibernate. Watchdog operation is possible during all power modes. To prevent a device reset from a WDT timeout, the WDT must be serviced during a configured window. A watchdog reset is recorded in the reset cause register.

An MCWDT is available for each of the CPU cores. These timers provide more capabilities than the WDT, and are only available in Active, Sleep, and Deep Sleep modes. These timers have multiple counters that can be used separately or cascaded to trigger interrupts and/or resets. They are clocked from ILO0 or the WCO.

3.2.6 Power modes

XMC7100 has six power modes.

- Active – all peripherals are available
- Low-Power Active (LPACTIVE) – Low-power profile of Active mode where all peripherals and the CPUs are available, but with limited capability
- Sleep – all peripherals except the CPUs are available
- Low-power Sleep (LPSLEEP) – Low-power profile of Sleep mode where all peripherals except the CPUs are available, but with limited capability
- Deep Sleep – only peripherals which work with CLK_LF are available
- Hibernate – the device and I/Os are frozen, the device resets on wakeup

3.3 Peripherals

3.3.1 Peripheral clock dividers

Integer and fractional clock dividers are provided for peripheral and timing purposes.

Table 4 Clock dividers - CPUSS Group (Nr. 0)

Divider Type	Instances	Description
div_8	3	Integer divider, 8 bits
div_16	1	Integer divider, 16 bits

Table 5 Clock dividers - COMM Group (Nr. 1)

Divider Type	Instances	Description
div_8	16	Integer divider, 8 bits
div_16	17	Integer divider, 16 bits
div_24_5	16	Fractional divider, 24.5 bits (24 integer bits, 5 fractional bits)

3.3.2 Peripheral protection unit

The Peripheral Protection Unit (PPU) controls and monitors unauthorized access from all masters (CPU, P-/M-DMA, Crypto, and any enabled debug interface) to the peripherals. It allows or restricts data transfers on the bus infrastructure. The access rules are enforced based on specific properties of a transfer, such as an address range for the transfer and access attributes (such as read/write, user/privilege, and secure/non-secure).

3.3.3 12-bit SAR ADC

XMC7100 contains three 1-Msps SAR ADCs. These ADCs can be clocked at up to 26.67 MHz and provide a 12-bit result in 26 clock cycles. The references for all three SAR ADCs come from a dedicated pair of inputs: VREFH and VREFL[18].

XMC7100 supports up to 93 logical ADC channels, and external inputs from up to 75 I/Os. Each ADC also supports six internal connections for diagnostic and monitoring purposes. The number of ADC channels (per ADC and package type) are listed in **Table 1**.

Each ADC has a sequencer, which autonomously cycles through the configured channels (sequencer scan) with zero-switching overhead (that is, the aggregate sampling bandwidth, when clocked at 26.67 MHz, is equal to 1 Msps whether it is for a single channel or distributed over several channels). The sequencer switching is controlled through a state machine or firmware. The sequencer prioritizes trigger requests, enables the appropriate analog channel, controls ADC sampling, initiates ADC data conversion, manages results, and initiates subsequent conversions for repetitive or group conversions without CPU intervention.

Each SAR ADC has an analog multiplexer used to connect the signals to be measured to the ADC. It has 32 GPIO_STD inputs, one special GPIO_STD input for motor-sense, and six additional inputs to measure internal signals such as a band-gap reference, a temperature sensor, and power supplies. The device supports synchronous sampling of one motor-sense channel on each of the three ADCs.

XMC7100 has one temperature sensor that is shared by all three ADCs. The temperature sensor must only be sampled by one ADC at a time. Software post-processing is required to convert the temperature sensor reading into kelvin or Celsius values.

Note

18. VREF_L prevents IR drops in the VSSIO and VSSA paths from impacting the measurements. VREF_L, when properly connected, reduces or removes the impact of IR drops in the VSSIO and VSSA paths from measurements.

To accommodate signals with varying source impedances and frequencies, it is possible to have different sample times programmed for each channel. Each ADC also supports range comparison, which allows fast detection of out-of-range values without having to wait for a sequencer scan to complete and for the CPU firmware to evaluate the measurement for out-of-range values. The ADCs are not usable in Deep Sleep and Hibernate modes as they require a high-speed clock. The ADC input reference voltage VREFH range is 2.7 V to V_{DDA} and VREFL is V_{SSA}.

3.3.4 Timer/counter/PWM block (TCPWM)

The TCPWM block consists of 16-bit (75 channels) and 32-bit (8 channels) counters with user-programmable period. Twelve of the 16-bit counters are optimized for motor-control operations. Each TCPWM counter contains a capture register to record the count at the time of an event, a period register (used to either stop or auto-reload the counter when its count is equal to the period register), and compare registers to generate signals that are used as PWM duty-cycle outputs.

Each counter within the TCPWM block supports several functional modes such as timer, capture, quadrature, PWM, PWM with dead-time insertion (PWM_DT, 8-bit), pseudo-random PWM (PWM_PR), and shift-register.

In motor-control applications, the counter within the TCPWM block supports enhanced quadrature mode with features such as asymmetric PWM generation, dead-time insertion (16-bit), and association of different dead times for PWM output signals.

The TCPWM block also provides true and complement outputs, with programmable offset between them, to allow their use as deadband complementary PWM outputs. The TCPWM block also has a kill input (only for the PWM mode) to force outputs to a predetermined state; for example, this may be used in motor-drive systems when an overcurrent state is detected and the PWMs driving the FETs need to be shut off immediately (no time for software intervention).

3.3.5 Serial communication blocks (SCB)

XMC7100 contains up to 11 serial communication blocks, each configurable to support I^2C, UART, or SPI.

3.3.5.1 I^2C interface

An SCB can be configured to implement a full I^2C master (capable of multi-master arbitration) or slave interface. Each SCB configured for I^2C can operate at speeds of up to 1 Mbps (Fast-mode Plus) and has flexible buffering options to reduce the interrupt overhead and latency of the CPU. In addition, each SCB supports FIFO buffering for receive and transmit data, which, by increasing the time for the CPU to read the data, reduces the need for clock stretching. The I^2C interface is compatible with Standard, Fast-mode, and Fast-mode Plus devices as specified in the NXP I^2C-bus specification and user manual (UM10204). The I^2C-bus I/O is implemented with GPIO in open-drain modes[19, 20].

3.3.5.2 UART interface

When configured as a UART, each SCB provides a full-featured UART with maximum signalling rate determined by the configured peripheral-clock frequency and over-sampling rate. It supports infrared interface (IrDA) and SmartCard (ISO 7816) protocols, which are minor variants of the UART protocol. It also supports the 9-bit multi-processor mode that allows the addressing of peripherals connected over common RX and TX lines. Common UART functions such as parity, number of stop bits, break detect, and frame error are supported. FIFO buffering of transmit and receive data allows greater CPU service latencies to be tolerated.

Notes

19. This is not 100% compliant with the I^2C-bus specification; I/Os are not over-voltage tolerant, do not support the 20-mA sink requirement of Fast-mode Plus, and violate the leakage specification when no power is applied.
20. Only Port 0 with the slew rate control enabled meets the minimum fall time requirement.
21. The Easy SPI (EZSPI) protocol is based on the Motorola SPI protocol operating in any mode (0, 1, 2, or 3). It allows communication between master and slave while reducing the need for CPU intervention.
22. The Easy I^2C (EZI2C) protocol is a unique communication scheme built on top of the I^2C protocol by Infineon. It uses a meta protocol around the standard I^2C protocol to communicate to an I^2C slave using indexed memory transfers. This reduces the need for CPU intervention.

3.3.5.3 SPI interface

The SPI configuration supports full Motorola SPI, TI Synchronous Serial Protocol (SSP, essentially adds a start pulse that is used to synchronize SPI-based codecs), and National Microwire (a half-duplex form of SPI). The SPI interface can use the FIFO. The SPI interface operates with up to a 12.5-MHz SPI Clock. SCB also supports EZSPI[21] mode.

SCB0 supports the following additional features:

- Operable as a slave in Deep Sleep mode
- I^2C slave EZ (EZI^2C[22]) mode with up to 256-B data buffer for multi-byte communication without CPU intervention
- I^2C slave externally-clocked operations
- Command/response mode with a 512-B data buffer for multi-byte communication without CPU intervention

3.3.6 CAN FD

XMC7100 contains two CAN FD controller blocks, each supporting four CAN FD channel. All CAN FD controllers are compliant with the ISO 11898-1:2015 standard; an ISO 16845:2015 certificate is available. It also implements the time-triggered CAN (TTCAN) protocol specified in ISO 11898-4 (TTCAN protocol levels 1 and 2) completely in hardware. All functions concerning the handling of messages are implemented by the Rx and Tx handlers. The Rx handler manages message acceptance filtering, transfer of received messages from the CAN core to a message RAM, and provides receive-message status. The Tx handler is responsible for the transfer of transmit messages from the message RAM to the CAN core, and provides transmit-message status.

3.3.7 Ethernet MAC

XMC7100 supports one Ethernet channel with transfer rates of 10, or 100 Mbps. The input/output frames and flow control are complaint to the Ethernet/IEEE 802.3bw standard and also IEEE-1588 precision-time protocol (PTP). XMC7100 supports full-duplex data transport using external PHY devices. The MAC supports glue-free connection to PHYs through IEEE standard MII, and RMII interfaces. The device also supports Audio-Video Bridging (AVB). The MAC supports standard 6-byte programmable addresses. Module uses AHB-Lite interface for DMA access.

3.3.8 External memory interface

In addition to the internal flash memory, XMC7100 supports direct connection to as much as 128 MB of external flash or RAM memory. This connection is made through either a HYPERBUS™ or serial peripheral interface (SPI). HYPERBUS™ allows connection to HYPERFLASH™ and HYPERRAM™ devices, while SPI (single, dual, quad, or octal SPI) can connect with serial flash memory. Code stored in memory connected through this interface allows execute-in-place (XIP) operation, which does not require the instructions to be first copied to internal memory, and on-the-fly encryption and decryption for environments requiring secure external data and code.

3.3.9 SDHC interface

XMC7100 supports one Secure Digital High Capacity (SDHC) interface, which conforms to Secure Digital (SD) 6.0, Secure Digital Input Output (SDIO) 4.10, and Embedded Multimedia Card (eMMC) 5.1 specifications, along with Host Control Interface (HCI) 4.2 specification. The interface supports System DMA (SDMA), Advance DMA (ADMA2, ADMA3), and command queuing (CQ) features. This interface supports data rates of SD DS (Default Speed, 4-bits at 25 MHz), SD HS (High Speed, 4-bits at 50 MHz, and eMMC 52-MHz DDR (8-bits at 52-MHz card clock).

3.3.10 Audio interface

XMC7100 supports three instances of Inter-IC Sound Bus (I^2S) interface to connect to digital audio devices: Supports I2S, Left Justified (LJ), and eight-channel Time Division Multiplexed (TDM) digital audio interface formats in both master and slave modes with independent operations in receive and transmit directions.

3.3.11 One-time-programmable (OTP) eFuse

XMC7100 contains a 1024-bit OTP eFuse memory that can be used to store and access a unique and unalterable identifier or serial number for each device. eFuses are also used to control the device life-cycle (manufacturing, programming, normal operation, end-of-life, and so on) and the security state. Of the 1024 bits, 192 are available for user purposes.

3.3.12 Event generator

The event generator supports generation of interrupts and triggers in Active mode and interrupts in Deep Sleep mode. The event generators are used to trigger a specific device operation (execution of an interrupt handler, a SAR ADC conversion, and so on) and to provide a cyclic wakeup mechanism from Deep Sleep mode. They provide CPU-free triggers for device functions, and reduce CPU involvement in triggering device functions, thus reducing overall power consumption and processing overhead.

3.3.13 Trigger multiplexer

XMC7100 supports connection of various peripherals using trigger signals. Triggers are used to inform a peripheral of the occurrence of an event or change of state. These triggers are used to affect or initiate some action in other peripherals. The trigger multiplexer is used to route triggers from a source peripheral to a destination. Triggers provide active logic functionality and are typically supported in Active mode.

3.4 I/Os

XMC7100 has up to 220 programmable I/Os.

The I/Os are organized as logical entities called ports, which are a maximum of 8 bits wide. During power-on and reset, the I/Os are forced to the High-Z state. During the Hibernate mode, I/Os are frozen.

Every I/O can generate an interrupt (if enabled) and each port has an interrupt request (IRQ) and interrupt service routine (ISR) associated with it.

I/O port power source mapping is listed in **Table 6**. The associated supply determines the V_{OH}, V_{OL}, V_{IH}, and V_{IL} levels when configured for CMOS and Industrial thresholds.

Table 6 I/O port power source

Supply pins	Ports
VDDD	P0, P1, P2, P3, P4, P5, P16, P17, P18, P19, P20, P21, P22, P23, P28, P29, P30, P31
VDDIO_1	P6, P7, P8, P9, P32
VDDIO_2	P10, P11, P12, P13, P14, P15, P26, P27
VDDIO_3	P24, P25

3.4.1 Port nomenclature

Px.y describes a particular bit “y” available within an I/O port “x.”

For example, P4.2 reads “port 4, bit 2”.

Each I/O implements the following:

- Programmable drive mode
  - High impedance
  - Resistive pull-up
  - Resistive pull-down
  - Open drain with strong pull-down
  - Open drain with strong pull-up
  - Strong pull-up or pull-down
  - Weak pull-up or pull-down

XMC7100 has three types of programmable I/Os: GPIO Standard, GPIO Enhanced, and HSIO Standard.

3.4.2 GPIO standard (GPIO_STD)

Supports standard industrial signaling across the 2.7 V to 5.5 V V_{DDIO} range. GPIO Standard I/Os have multiple configurable drive levels, drive modes, and selectable input levels.

3.4.3 GPIO enhanced (GPIO_ENH)

Supports extended functionality industrial signalling across the 2.7 V to 5.5 V V_{DDIO} range with higher currents at lower voltages (full I^2C timing support, slew-rate control).

Both GPIO_STD and GPIO_ENH implement the following:

- Configurable input threshold (CMOS, TTL, or industrial)
- Hold mode for latching previous state (used for retaining the I/O state in Deep Sleep mode)
- Analog input mode (input and output buffers disabled)

3.4.4 HSIO Standard (HSIO_STD)

These I/Os are optimized exclusively for high-speed signaling and do not support slew-rate control, Deep Sleep operation, POR mode control, analog connections, or non-CMOS signaling levels. HSIO_STD supports high-speed peripherals such as QSPI, HYPERBUS™, Ethernet, and SDHC controller. HSIO_STD also supports programmable drive strength. These I/Os are available only in Active mode and retain state in Deep Sleep mode.

3.4.5 Smart I/O

The Smart I/O allows Boolean operations on signals going to the I/O from the subsystems of the chip or on signals coming into the chip. XMC7100 has five Smart I/O blocks. The operation can be synchronous or asynchronous and the blocks operate in all device power modes except for hibernate.

4 XMC7100 address map

XMC7100 microcontroller supports the memory spaces shown in **Figure 3**.

- 1088 KB (960 KB + 128 KB), 2112 KB (1984 KB + 128 KB), or 4160 KB (4032 KB + 128 KB) of code-flash, used in the single- or dual-bank mode based on the associated bit in the flash control register
  - Single-bank mode: 1088 KB, 2112 KB, or 4160 KB
  - Dual-bank mode: 544 KB, 1056 KB, or 2080 KB per bank
- 128 KB (96 KB + 32 KB) or 256 KB (192 KB + 64 KB) of work-flash, used in the single- or dual-bank mode based on the associated bit in the flash control register
  - Single-bank mode: 128 KB or 256 KB
  - Dual-bank mode: 64 KB or 128 KB per bank
- 64 KB of secure ROM
- 192 KB, 384 KB, or 768 KB of SRAM (First 2 KB is reserved for internal usage)
- 16 KB of Instruction TCM for each Cortex-M7 CPU
- 16 KB of Data TCM for each Cortex-M7 CPU
- 128 MB SMIF XIP

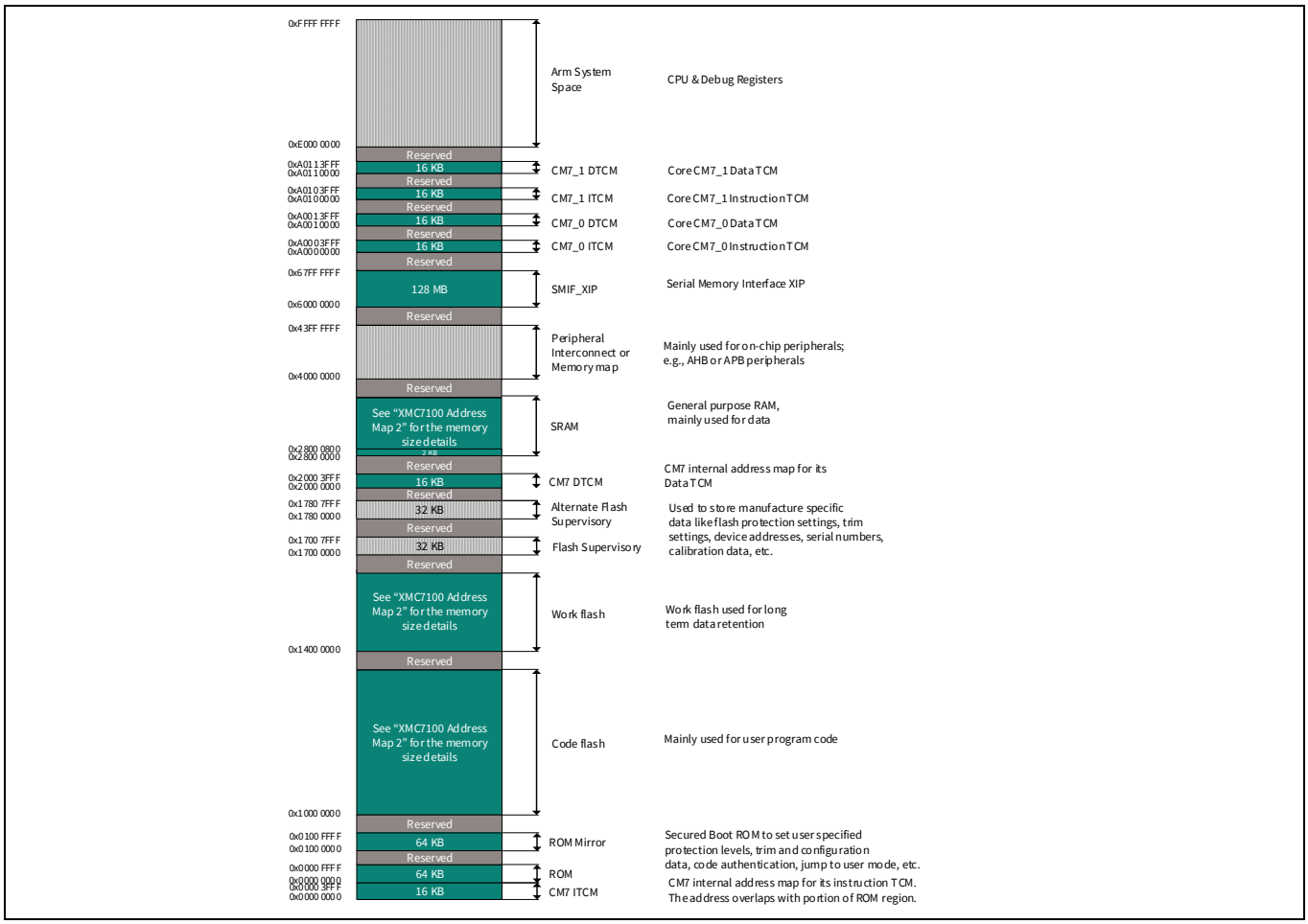

Figure 3 XMC7100 address map 1[23, 24]

Notes

23. The size representation is not up to scale.
24. First 2 KB of SRAM is reserved, not available for users. User must keep the power of first 32KB block of SRAM0 in enabled or retained in all Active, LP Active, Sleep, LP Sleep, Deep Sleep modes.

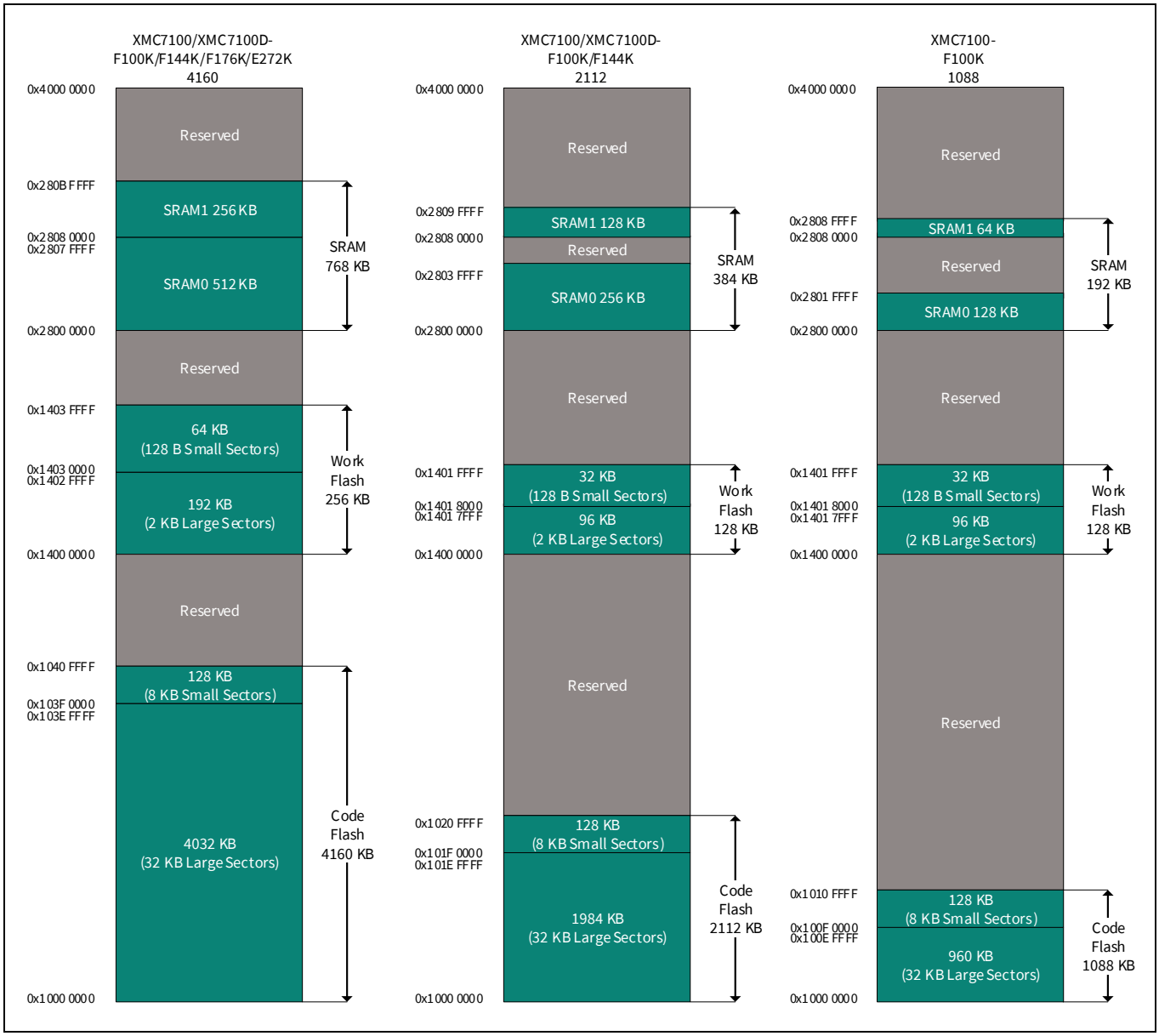

Figure 4 **XMC7100 address map 2**[25]

Note
25.The size representation is not up to scale.

5 Flash base address map

Table 7 through Table 12 give information about the sector mapping of the code- and work-flash regions along with their respective base addresses.

Table 7 Code-flash address mapping in single-bank mode

Code-flash size (KB)	Large sectors (LS)	Small sectors (SS)	Large sector base address	Small sector base address
4160	32 KB × 126	8 KB × 16	0x1000 0000	0x103F 0000
2112	32 KB x 62	8 KB x 16	0x1000 0000	0x101F 0000
1088	32 KB x 30	8 KB x 16	0x1000 0000	0x100F 0000

Table 8 Work-flash address mapping in single-bank mode

Work-flash size (KB)	Large sectors	Small sectors	Large sector base address	Small sector base address
256	2 KB × 96	128 B × 512	0x1400 0000	0x1403 0000
128	2 KB x 48	128 B x 256	0x1400 0000	0x1401 8000

Table 9 Code-flash address mapping in dual-bank mode (Mapping A)

Code-flash size (KB)	First half LS	First half SS	Second half LS	Second half SS	First half LS base address	First half SS base address	Second half LS base address	Second half SS base address
4160	32 KB × 63	8 KB × 8	32 KB × 63	8 KB × 8	0x1000 0000	0x101F 8000	0x1200 0000	0x121F 8000
2112	32 KB x 31	8 KB x 8	32 KB x 31	8 KB x 8	0x1000 0000	0x100F 8000	0x1200 0000	0x120F 8000
1088	32 KB x 15	8 KB x 8	32 KB x 15	8 KB x 8	0x1000 0000	0x1007 8000	0x1200 0000	0x1207 8000

Table 10 Code-flash address mapping in dual-bank mode (Mapping B)

Code-flash size (KB)	First half LS	First half SS	Second half LS	Second half SS	First half LS base address	First half SS base address	Second half LS base address	Second half SS base address
4160	32 KB × 63	8 KB × 8	32 KB × 63	8 KB × 8	0x1200 0000	0x121F 8000	0x1000 0000	0x101F 8000
2112	32 KB x 31	8 KB x 8	32 KB x 31	8 KB x 8	0x1200 0000	0x120F 8000	0x1000 0000	0x100F 8000
1088	32 KB x 15	8 KB x 8	32 KB x 15	8 KB x 8	0x1200 0000	0x1207 8000	0x1000 0000	0x1007 8000

Table 11 Work-flash address mapping in dual-bank mode (Mapping A)

Work-flash size (KB)	First half LS	First half SS	Second half LS	Second half SS	First half LS base address	First half SS base address	Second half LS base address	Second half SS base address
256	2 KB × 48	128 B × 256	2 KB × 48	128 B × 256	0x1400 0000	0x1401 8000	0x1500 0000	0x1501 8000
128	2 KB x 24	128 B x 128	2 KB x 24	128 B x 128	0x1400 0000	0x1400 C000	0x1500 0000	0x1500 C000

Table 12 Work-flash address mapping in dual-bank mode (Mapping B)

Work-flash size (KB)	First half LS	First half SS	Second half LS	Second half SS	First half LS base address	First half SS base address	Second half LS base address	Second half SS base address
256	2 KB × 48	128 B × 256	2 KB × 48	128 B × 256	0x1500 0000	0x1501 8000	0x1400 0000	0x1401 8000
128	2 KB x 24	128 B x 128	2 KB x 24	128 B x 128	0x1500 0000	0x1500 C000	0x1400 0000	0x1400 C000

6 Peripheral I/O map

Table 13 XMC7100 peripheral I/O map

Section	Description	Base address	Instances	Instance size	Group	Slave
PERI	Peripheral interconnect	0x4000 0000	–	–	0	0
	Peripheral group (0, 1, 2, 3, 4, 5, 6, 8, 9)	0x4000 4000	9	0x40		
	Peripheral trigger group	0x4000 8000	11	0x400		
	Peripheral 1:1 trigger group	0x4000 C000	11	0x400		
PERI_MS	Peripheral interconnect, master interface	0x4002 0000	–	–	0	1
	PERI Programmable PPU	0x4002 0000	10[26]	0x40		
	PERI Fixed PPU	0x4002 0800	700	0x40		
PERI_PCLK	Peripheral Clock Groups	0x4004 0000	2	0x2000	0	2
CRYPTO	Cryptography component	0x4010 0000	–	–	1	0
CPUSS	CPU subsystem (CPUSS)	0x4020 0000	–	–	2	0
FAULT	Fault structure subsystem	0x4021 0000	–	–	2	1
	Fault structures	0x4021 0000	4	0x100		
IPC	Inter process communication	0x4022 0000	–	–	2	2
	IPC structures	0x4022 0000	8	0x20		
	IPC interrupt structures	0x4022 1000	8	0x20		
PROT	Protection	0x4023 0000	–	–	2	3
	Shared memory protection unit structures	0x4023 2000	16	0x40		
	Memory protection unit structures	0x4023 4000	16	0x400		
FLASHC	Flash controller	0x4024 0000	–	–	2	4
SRSS	System Resources Sub-System Core Registers	0x4026 0000	–	–	2	5
	Clock Supervision High Frequency	0x4026 1400	8	0x10		
	Clock Supervision Reference Frequency	0x4026 1710	1	–		
	Clock Supervision Low Frequency	0x4026 1720	1	–		
	Clock Supervision Internal Low Frequency	0x4026 1730	1	–		
	Clock PLL 400 MHz	0x4026 1900	2	0x10		
	Multi Counter WDT	0x4026 8000	3	0x100		
	Free Running WDT	0x4026 C000	1	–		
BACKUP	SRSS Backup Domain/RTC	0x4027 0000	–	–	2	6
	Backup Register	0x4027 1000	4	0x04		
P-DMA	P-DMA0 Controller	0x4028 0000	–	–	2	7
	P-DMA0 channel structures	0x4028 8000	100	0x40		
	P-DMA1 Controller	0x4029 0000	–	–	2	8
	P-DMA1 channel structures	0x4029 8000	58	0x40		
M-DMA	M-DMA0 Controller	0x402A 0000	–	–	2	9
	M-DMA0 channels	0x402A 1000	8	0x100		
eFUSE	eFUSE Customer Data (192 bits)	0x402C 0868	6	0x04	2	10
HSIOM	High-Speed I/O Matrix (HSIOM)	0x4030 0000	33	0x10	3	0
GPIO	GPIO port control/configuration	0x4031 0000	33	0x80	3	1

Note
26. These Programmable PPUs are configured by the Boot ROM and are available for the user based on the access rights. See the device-specific TRM to know more about the configuration of these programmable PPUs.

Table 13 XMC7100 peripheral I/O map *(continued)*

Section	Description	Base address	Instances	Instance size	Group	Slave
SMARTIO	Programmable I/O configuration	0x4032 0000	–	–	3	2
	SMARTIO port configuration	0x4032 0C00	5	0x100		
EVTGEN	Event generator 0 (EVTGEN0)	0x403F 0000	–	–	3	3
	Event generator 0 comparator structures	0x403F 0800	16	0x20		
SMIF	Serial Memory Interface 0 (SMIF0)	0x4042 0000	–	–	4	0
	SMIF0 Devices	0x4042 0800	1	0x80		
SDHC	Secure Digital High Capacity 0 (SDHC0)	0x4046 0000	–	–	4	1
	SDHC0 Wrap	0x4046 0000	–	–		
	SDHC0 Core	0x4046 1000		–		
ETH	Ethernet 0 (ETH0)	0x4048 0000	1	0x10000	4	2
TTCANFD	CAN0 controller	0x4052 0000	4	0x200	5	1
	Message RAM CAN0	0x4053 0000		0x8000		
	CAN1 controller	0x4054 0000	4	0x200	5	2
	Message RAM CAN1	0x4055 0000	–	0x8000		
TCPWM	Timer/Counter/PWM 0 (TCPWM0)	0x4058 0000	–	–	5	3
	TCPWM0 Group #0 (16-bit)	0x4058 0000	63	0x80		
	TCPWM0 Group #1 (16-bit, Motor control)	0x4058 8000	12	0x80		
	TCPWM0 Group #2 (32-bit)	0x4059 0000	8	0x80		
SCB	Serial Communications Block (SPI/UART/I^2C)	0x4060 0000	11	0x10000	6	0-10
I^2S	I^2S Audio Subsystem	0x4080 0000	3	0x1000	8	0-2
SAR PASS	Programmable Analog Subsystem (PASS0)	0x4090 0000	–	–	9	0
	SAR0 channel controller	0x4090 0000	–	–		
	SAR1 channel controller	0x4090 1000	–	–		
	SAR2 channel controller	0x4090 2000	–	–		
	SAR0 channel structures	0x4090 0800	32	0x40		
	SAR1 channel structures	0x4090 1800	32	0x40		
	SAR2 channel structures	0x4090 2800	8	0x40		

Note
26. These Programmable PPUs are configured by the Boot ROM and are available for the user based on the access rights. See the device-specific TRM to know more about the configuration of these programmable PPUs.

7 XMC7100 clock diagram

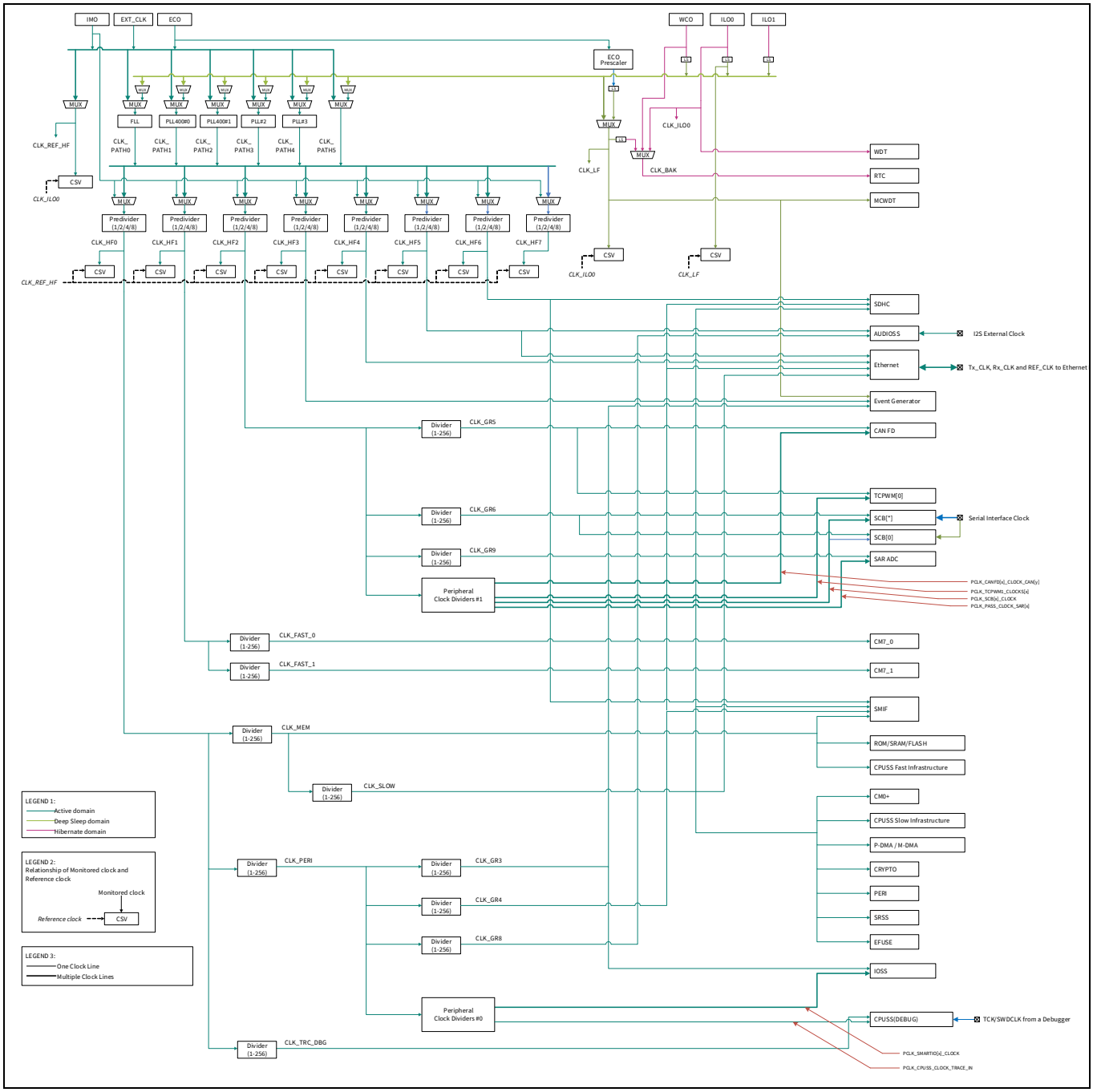

Figure 5 XMC7100 clock diagram

8 XMC7100 CPU start-up sequence

The start-up sequence is described in the following steps:

- System Reset (@0x0000 0000)
- CM0+ executes ROM boot (@0x0000 0004)
  - Applies trims
  - Applies Debug Access port (DAP) access restrictions and system protection from eFuse and supervisory flash
  - Authenticates flash boot (only in SECURE life-cycle stage) and transfers control to it
- CM0+ executes flash boot (from Supervisory flash @0x1700 2000)
  - Debug pins are configured based on the SWD/JTAG spec[27]
  - Sets CM0+ vector offset register (CM0_VTOR part of the Arm® system space) to the beginning of flash (@0x1000 0000)
  - CM0+ branches to its Reset handler
- CM0+ starts execution of application
  - Moves CM0+ vector table to SRAM (updates CM0+ vector table base)
  - Sets clocks for CM7_0 (CLK_HF1) and CM7_1 (CLK_HF1)
  - Sets CM7_0 (CM7_0_VECTOR_TABLE_BASE @0x4020 0200) and CM7_1 (CM7_1_VECTOR_TABLE_BASE @0x4020 0600) vector tables to the respective locations, also and mentioned in flash (specified in the linker definition file)
  - Enables the power for both the CPU cores CM7_0 and CM7_1
  - Disables CPU_WAIT to allow accesses from the debugger
  - Releases CM7_0 and/or CM7_1 from reset
  - Continues execution of CM0+ user application
- CM7_0 and/or CM7_1 executes directly from either code-flash or SRAM
  - CM7_0/CM7_1 branches to its Reset handler
  - Continues execution of the user application

Note
27. Port configuration of SWD/JTAG pins will be changed from the default GPIO mode to support debugging after the boot process, see **Table 15** for pin assignments.

9 Pin assignment

Note For all TEQFP packages, the thermal pad needs to be connected to VSSD.

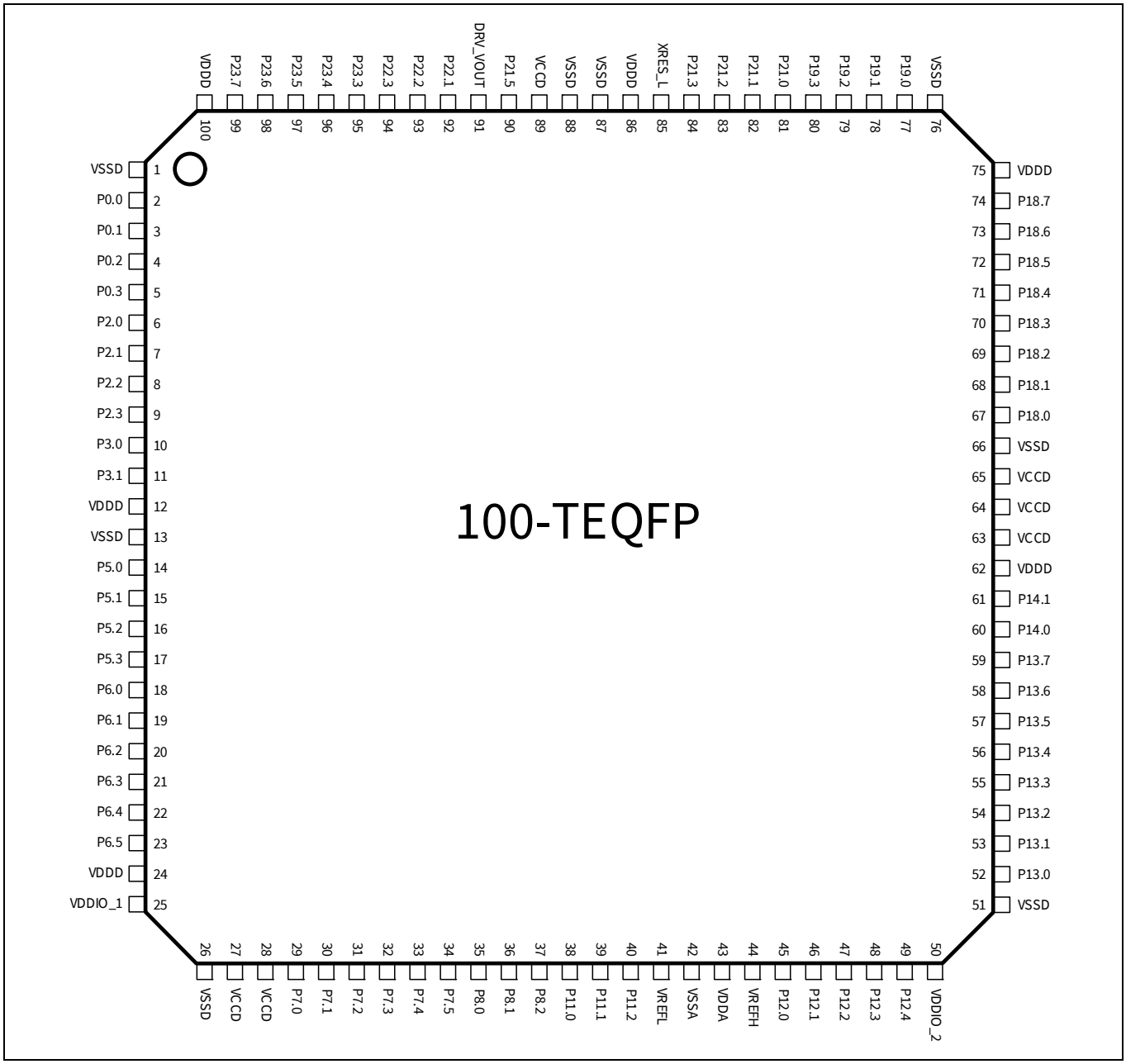

Figure 6 **100-TEQFP pin assignment**

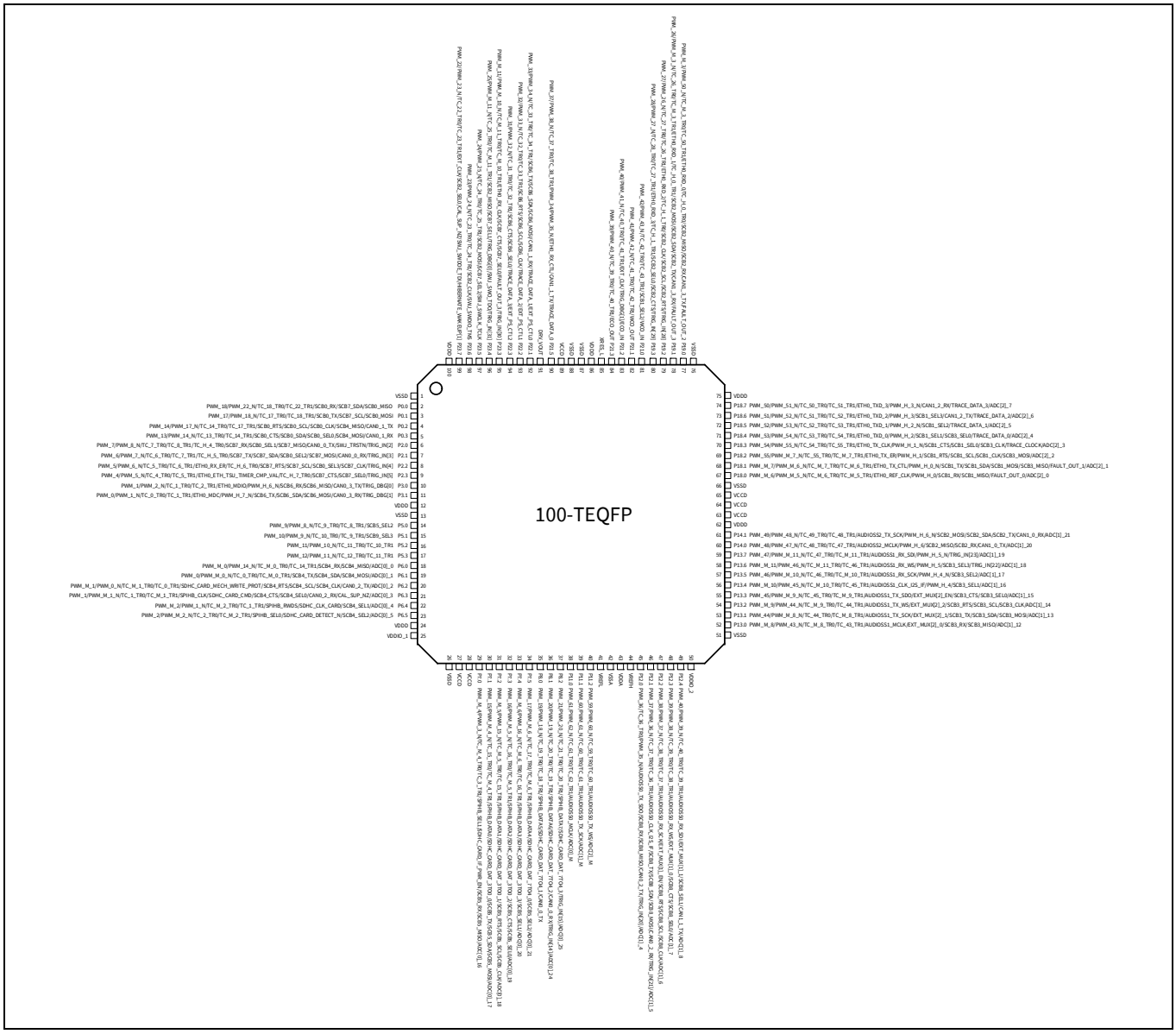

Figure 7 100-TEQFP pin assignment with alternate functions

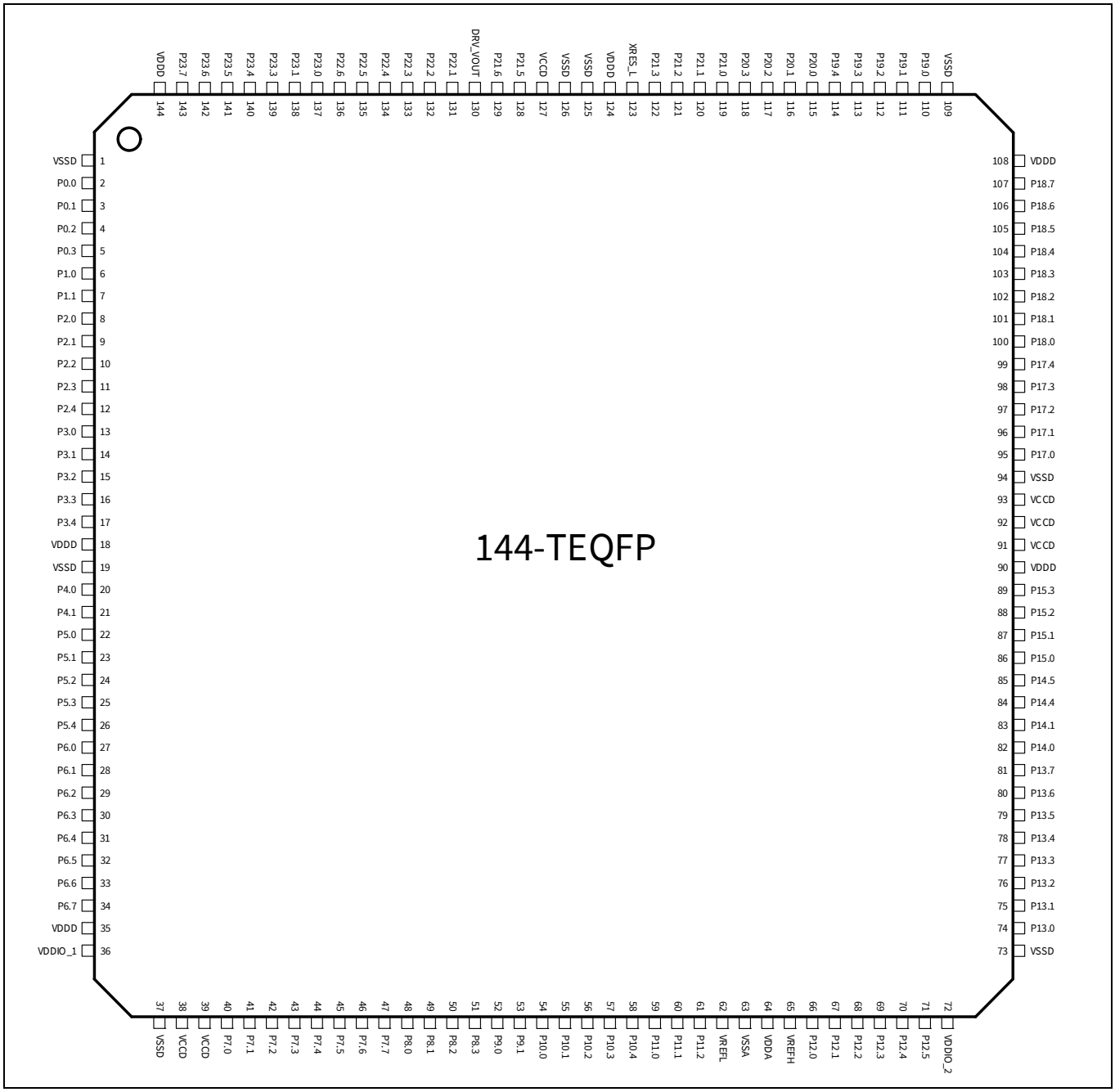

Figure 8 144-TEQFP pin assignment

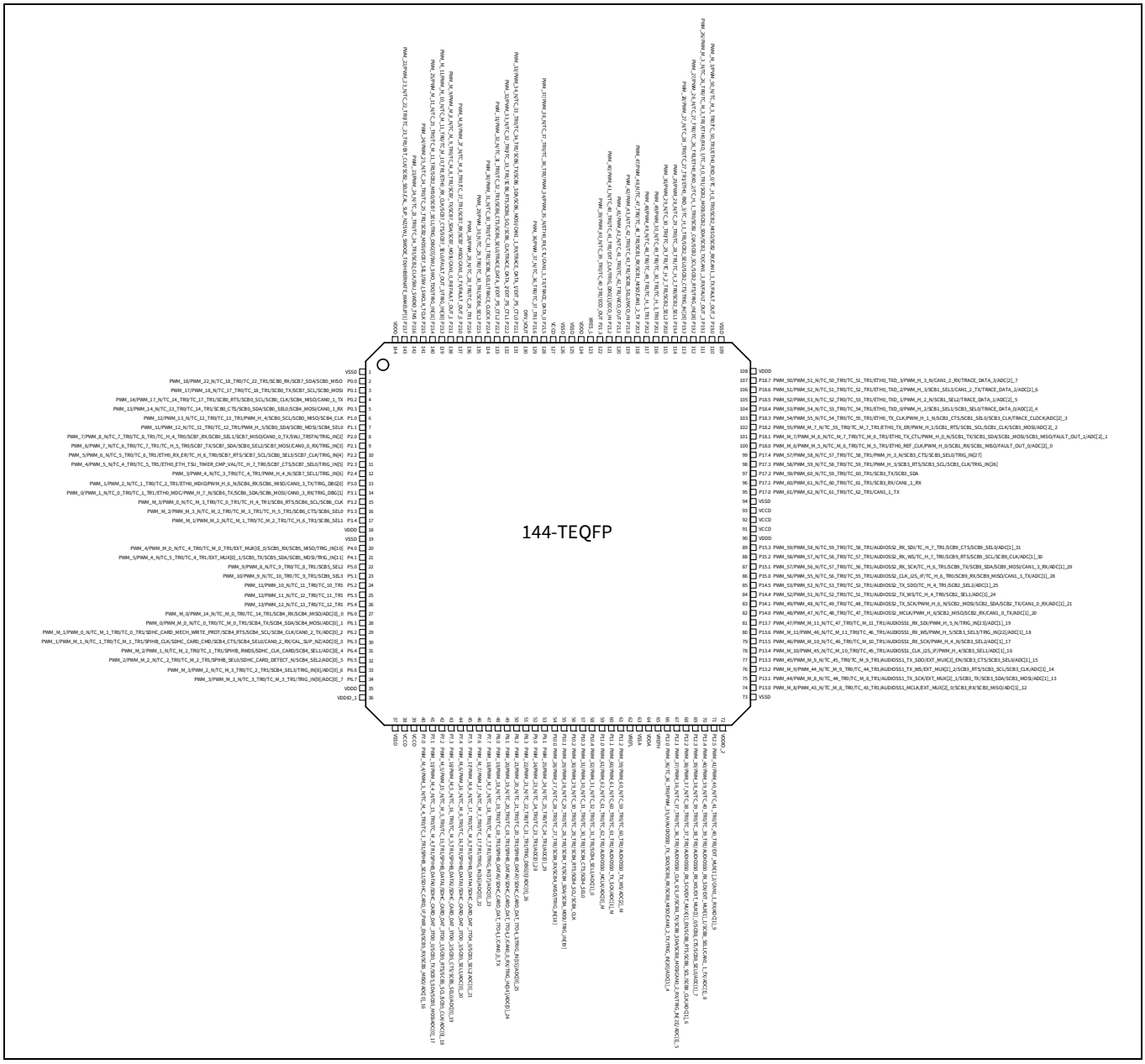

Figure 9 144-TEQFP pin assignment with alternate functions

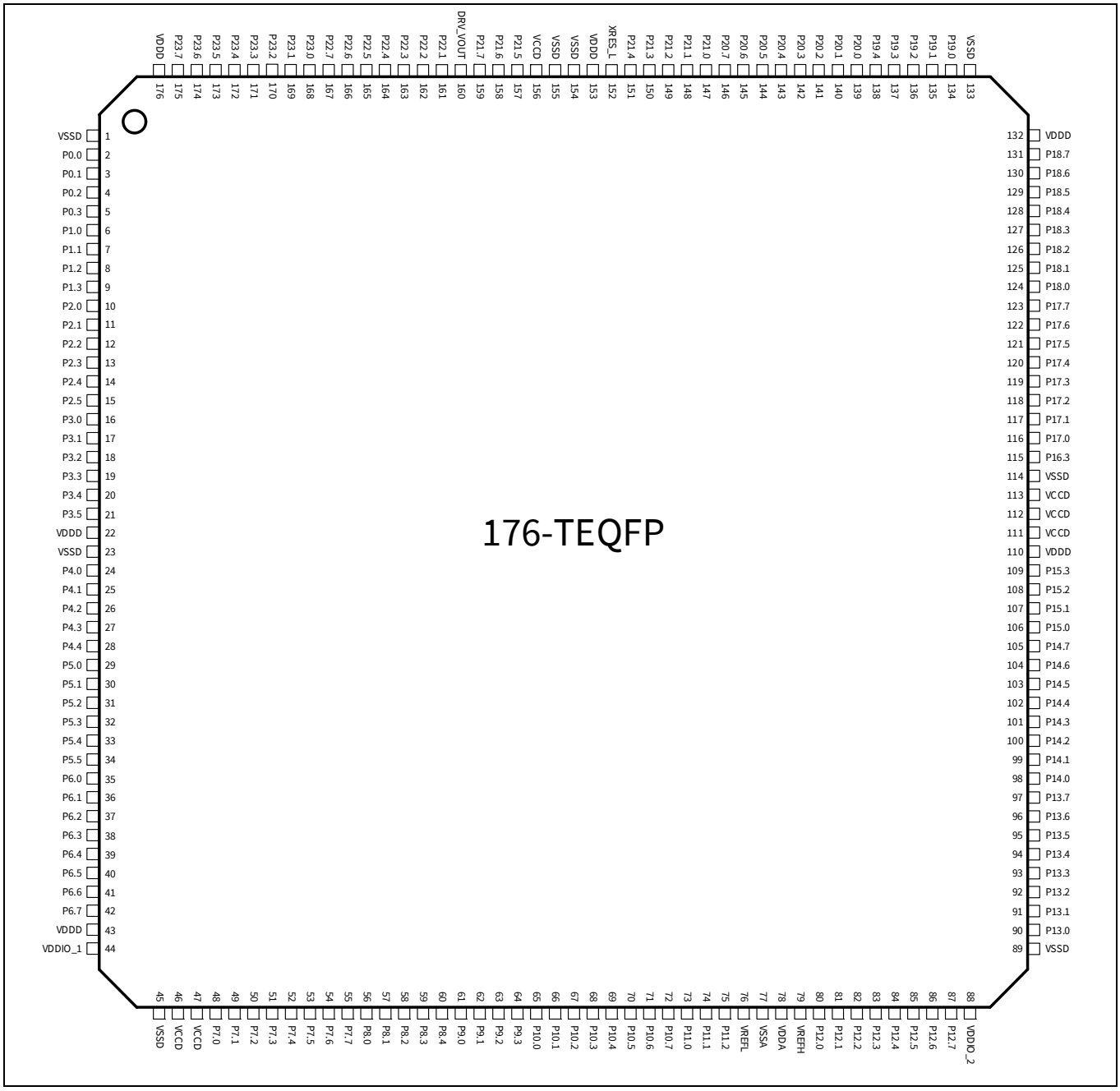

Figure 10 176-TEQFP pin assignment

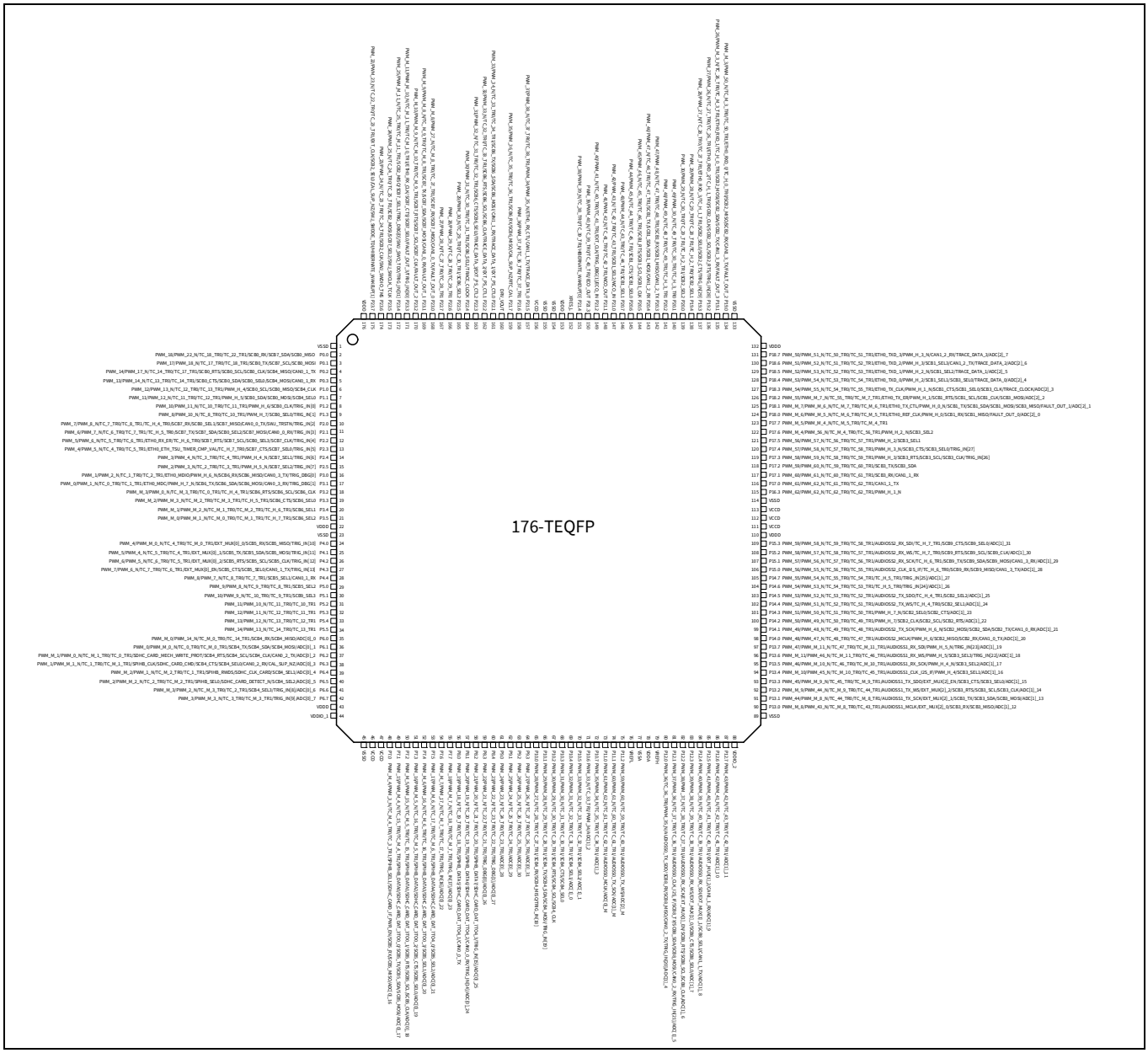

Figure 11 176-TEQFP pin assignment with alternate functions

	1	2	3	4	5	6	7	8	9	10	11	12	13	14	15	16	17	18
A	VSSD	P6.5	P6.2	P31.2	P31.0	P5.0	P4.4	P4.0	P29.5	P29.1	P29.0	P3.1	P3.0	P2.0	P1.1	P1.0	P0.2	VSSD
B	P6.7	P6.6	P6.3	P6.0	P31.1	P5.1	P30.0	P4.1	P29.6	P29.2	P3.5	P3.2	P2.4	P2.1	P1.2	P0.3	P0.1	P0.0
C	P32.0	P32.1	P6.4	P6.1	P5.4	P5.2	P30.1	P4.2	P29.7	P29.3	P3.6	P3.3	P2.5	P2.2	P1.3	P28.7	P28.6	P28.5
D	P32.2	P32.3	P32.4	P32.5	P5.5	P5.3	P30.2	P4.3	VSSD	P29.4	P3.7	P3.4	P2.6	P2.3	P1.4	P28.4	P28.3	P28.2
E	P7.0	P7.1	P32.6	P32.7											P28.1	P28.0	P23.7	P23.6
F	P7.2	P7.3	P7.4	P7.5		VCCD	P30.3	VDDD	VDDIO_1	VDDIO_1	VDDIO_1	P2.7	VCCD		P23.5	P23.4	P23.3	P22.3
G	P7.6	P7.7	P8.0	P8.1		P8.2	VSSD					VSSD	P23.2		P23.1	P23.0	P22.7	P22.2
H	P9.0	P9.1	P8.3	P8.4		VDDIO_3		VSSIO_3	VSSD	VSSD	VSSD		VDDD		P22.6	P22.5	P22.4	P22.1
J	P9.2	P9.3	P24.0	P24.1		VDDIO_3		VSSIO_3	VSSD	VSSD	VSSD		VDDD		VSSD	P21.7	P21.6	DRV_VOUT
K	P24.2	P24.3	P24.4	P25.0		VREFH		VREFL	VSSD	VSSD	VSSD		VDDD		P20.7	P20.6	P21.5	XRES_L
L	P25.1	P25.2	P25.3	P25.4		VDDA		VSSA	VSSIO_4	VSSIO_4	VSSD_1		VDDD		P20.5	P20.4	P21.4	VSSD_2
M	P10.0	P25.5	P25.6	P25.7		P11.0	VSSD					VSSD	P20.3		P20.2	P20.1	P21.2	P21.3
N	P10.1	P10.2	P10.3	P10.4		VCCD	P14.5	VDDIO_2	VDDIO_4	VDDIO_4	VDDD	P16.7	VCCD		P19.4	P20.0	P21.0	P21.1
P	P10.5	P10.6	P10.7	P11.1											P18.7	P19.3	P19.2	VSSD_2
R	P12.0	P12.1	P12.2	P11.2	VSSD	P14.4	P14.7	P26.1	P26.5	P27.1	P27.5	P27.7	P16.5	VSSD	P18.6	P18.5	P19.1	P19.0
T	P12.3	P12.4	P12.5	P13.5	P13.7	P14.3	P14.6	P26.0	P26.4	P27.0	P27.4	P27.6	P16.4	P16.6	P17.4	P18.4	P18.3	P18.2
U	P12.6	P12.7	P13.2	P13.4	P13.6	P14.2	P15.1	P15.3	P26.3	P26.7	P27.3	P16.1	P16.3	P17.1	P17.3	P17.6	P18.1	P18.0
V	VSSD	P13.0	P13.1	P13.3	P14.0	P14.1	P15.0	P15.2	P26.2	P26.6	P27.2	P16.0	P16.2	P17.0	P17.2	P17.5	P17.7	VSSD

Figure 12 272-BGA ball map

10 Hi-speed I/O matrix connections

Table 14 HSIOM connections reference

Name	Number	Description
HSIOM_SEL_GPIO	0	GPIO controls 'out'
HSIOM_SEL_GPIO_DSI	1	Reserved
HSIOM_SEL_DSI_DSI	2	
HSIOM_SEL_DSI_GPIO	3	
HSIOM_SEL_AMUXA	4	
HSIOM_SEL_AMUXB	5	
HSIOM_SEL_AMUXA_DSI	6	
HSIOM_SEL_AMUXB_DSI	7	
HSIOM_SEL_ACT_0	8	Active functionality 0
HSIOM_SEL_ACT_1	9	Active functionality 1
HSIOM_SEL_ACT_2	10	Active functionality 2
HSIOM_SEL_ACT_3	11	Active functionality 3
HSIOM_SEL_DS_0	12	Deep Sleep functionality 0
HSIOM_SEL_DS_1	13	Deep Sleep functionality 1
HSIOM_SEL_DS_2	14	Deep Sleep functionality 2
HSIOM_SEL_DS_3	15	Deep Sleep functionality 3
HSIOM_SEL_ACT_4	16	Active functionality 4
HSIOM_SEL_ACT_5	17	Active functionality 5
HSIOM_SEL_ACT_6	18	Active functionality 6
HSIOM_SEL_ACT_7	19	Active functionality 7
HSIOM_SEL_ACT_8	20	Active functionality 8
HSIOM_SEL_ACT_9	21	Active functionality 9
HSIOM_SEL_ACT_10	22	Active functionality 10
HSIOM_SEL_ACT_11	23	Active functionality 11
HSIOM_SEL_ACT_12	24	Active functionality 12
HSIOM_SEL_ACT_13	25	Active functionality 13
HSIOM_SEL_ACT_14	26	Active functionality 14
HSIOM_SEL_ACT_15	27	Active functionality 15
HSIOM_SEL_DS_4	28	Deep Sleep functionality 4
HSIOM_SEL_DS_5	29	Deep Sleep functionality 5
HSIOM_SEL_DS_6	30	Deep Sleep functionality 6
HSIOM_SEL_DS_7	31	Deep Sleep functionality 7

11 Package pin list and alternate functions

Most pins have alternate functionality, as specified in **Table 15**.

Port 11 has the following additional features,

- *Ability to pass full-level analog signals to the SAR without clipping to V_{DDIO} in cases where $V_{DDIO} < V_{DDA}$*
- *Ability to simultaneously capture all three ADC signals with highest priority (ADC[0:2]_M)*
- Lower noise, for the most sensitive sensors

Table 15 Pin selector and alternate pin functions in Deep Sleep (DS) Mode, Analog, Smart I/O (Preliminary)

Name	I/O type	Package				Deep Sleep mapping			Analog	SMART I/O
	HCon#0[22]	272-BGA	176-TEQFP	144-TEQFP	100-TEQFP	HCon#14	HCon#29	HCon#30		
		Pin	Pin	Pin	Pin	DS #0[23, 24]	DS #1	DS #2		
P0.0	GPIO_ENH	B18	2	2	2	–	–	SCB0_MISO	–	–
P0.1	GPIO_ENH	B17	3	3	3	–	–	SCB0_MOSI	–	–
P0.2	GPIO_ENH	A17	4	4	4	SCB0_SCL	–	SCB0_CLK	–	–
P0.3	GPIO_ENH	B16	5	5	5	SCB0_SDA	–	SCB0_SEL0	–	–
P1.0	GPIO_STD	A16	6	6	NA	SCB0_SCL	–	SCB0_MISO	–	–
P1.1	GPIO_STD	A15	7	7	NA	SCB0_SDA	–	SCB0_MOSI	–	–
P1.2	GPIO_STD	B15	8	NA	NA	–	–	SCB0_CLK	–	–
P1.3	GPIO_STD	C15	9	NA	NA	–	–	SCB0_SEL0	–	–
P1.4	GPIO_STD	D15	NA	NA	NA	–	–	–	–	–
P2.0	GPIO_STD	A14	10	8	6	–	SWJ_TRSTN	SCB0_SEL1	–	–
P2.1	GPIO_STD	B14	11	9	7	–	–	SCB0_SEL2	–	–
P2.2	GPIO_STD	C14	12	10	8	–	–	SCB0_SEL3	–	–
P2.3	GPIO_STD	D14	13	11	9	–	–	–	–	–
P2.4	GPIO_STD	B13	14	12	NA	–	–	–	–	–
P2.5	GPIO_STD	C13	15	NA	NA	–	–	–	–	–
P2.6	GPIO_STD	D13	NA	NA	NA	–	–	–	–	–
P2.7	GPIO_STD	F12	NA	NA	NA	–	–	–	–	–
P3.0	GPIO_STD	A13	16	13	10	–	–	–	–	–
P3.1	GPIO_STD	A12	17	14	11	–	–	–	–	–

Notes

22. HCon refers to Hi-Speed I/O matrix connection reference as per **Table 14**.
23. Deep Sleep ordering (DS #0, DS #1, DS #2) does not have any impact on choosing any alternate functions; the HSIOM module handles the individual alternate function assignment.
24. All port pin functions available in Deep Sleep mode are also available in Active mode.
25. I/O pins that support an oscillator function (WCO or ECO) must be configured for high-Z if the oscillator is enabled.
26. This I/O has increased leakage to ground when the V_{DDD} supply is below the POR threshold.

Table 15 Pin selector and alternate pin functions in Deep Sleep (DS) Mode, Analog, Smart I/O (Preliminary) *(continued)*

Name	I/O type	Package				Deep Sleep mapping			Analog	SMART I/O
	HCon#0[22]	272-BGA	176-TEQFP	144-TEQFP	100-TEQFP	HCon#14	HCon#29	HCon#30		
		Pin	Pin	Pin	Pin	DS #0[23, 24]	DS #1	DS #2		
P3.2	GPIO_STD	B12	18	15	NA	–	–	–	–	–
P3.3	GPIO_STD	C12	19	16	NA	–	–	–	–	–
P3.4	GPIO_STD	D12	20	17	NA	–	–	–	–	–
P3.5	GPIO_STD	B11	21	NA	NA	–	–	–	–	–
P3.6	GPIO_STD	C11	NA	NA	NA	–	–	–	–	–
P3.7	GPIO_STD	D11	NA	NA	NA	–	–	–	–	–
P4.0	GPIO_STD	A8	24	20	NA	–	–	–	–	–
P4.1	GPIO_STD	B8	25	21	NA	–	–	–	–	–
P4.2	GPIO_STD	C8	26	NA	NA	–	–	–	–	–
P4.3	GPIO_STD	D8	27	NA	NA	–	–	–	–	–
P4.4	GPIO_STD	A7	28	NA	NA	–	–	–	–	–
P5.0	GPIO_STD	A6	29	22	14	–	–	–	–	–
P5.1	GPIO_STD	B6	30	23	15	–	–	–	–	–
P5.2	GPIO_STD	C6	31	24	16	–	–	–	–	–
P5.3	GPIO_STD	D6	32	25	17	–	–	–	–	–
P5.4	GPIO_STD	C5	33	26	NA	–	–	–	–	–
P5.5	GPIO_STD	D5	34	NA	NA	–	–	–	–	–
P6.0	GPIO_STD	B4	35	27	18	–	–	–	ADC[0]_0	–
P6.1	GPIO_STD	C4	36	28	19	–	–	–	ADC[0]_1	–
P6.2	GPIO_STD	A3	37	29	20	–	–	–	ADC[0]_2	–
P6.3	GPIO_STD	B3	38	30	21	–	–	–	ADC[0]_3	–
P6.4	GPIO_STD	C3	39	31	22	–	–	–	ADC[0]_4	–
P6.5	GPIO_STD	A2	40	32	23	–	–	–	ADC[0]_5	–
P6.6	GPIO_STD	B2	41	33	NA	–	–	–	ADC[0]_6	–
P6.7	GPIO_STD	B1	42	34	NA	–	–	–	ADC[0]_7	–
P7.0	GPIO_STD	E1	48	40	29	–	–	–	ADC[0]_16	–

Notes

22. HCon refers to Hi-Speed I/O matrix connection reference as per **Table 14**.
23. Deep Sleep ordering (DS #0, DS #1, DS #2) does not have any impact on choosing any alternate functions; the HSIOM module handles the individual alternate function assignment.
24. All port pin functions available in Deep Sleep mode are also available in Active mode.
25. I/O pins that support an oscillator function (WCO or ECO) must be configured for high-Z if the oscillator is enabled.
26. This I/O has increased leakage to ground when the V_{DDD} supply is below the POR threshold.

Table 15 Pin selector and alternate pin functions in Deep Sleep (DS) Mode, Analog, Smart I/O (Preliminary) *(continued)*

Name	I/O type	Package				Deep Sleep mapping			Analog	SMART I/O
	HCon#0[22]	272-BGA	176-TEQFP	144-TEQFP	100-TEQFP	HCon#14	HCon#29	HCon#30		
		Pin	Pin	Pin	Pin	DS #0[23, 24]	DS #1	DS #2		
P7.1	GPIO_STD	E2	49	41	30	–	–	–	ADC[0]_17	–
P7.2	GPIO_STD	F1	50	42	31	–	–	–	ADC[0]_18	–
P7.3	GPIO_STD	F2	51	43	32	–	–	–	ADC[0]_19	–
P7.4	GPIO_STD	F3	52	44	33	–	–	–	ADC[0]_20	–
P7.5	GPIO_STD	F4	53	45	34	–	–	–	ADC[0]_21	–
P7.6	GPIO_STD	G1	54	46	NA	–	–	–	ADC[0]_22	–
P7.7	GPIO_STD	G2	55	47	NA	–	–	–	ADC[0]_23	–
P8.0	GPIO_STD	G3	56	48	35	–	–	–	–	–
P8.1	GPIO_STD	G4	57	49	36	–	–	–	ADC[0]_24	–
P8.2	GPIO_STD	G6	58	50	37	–	–	–	ADC[0]_25	–
P8.3	GPIO_STD	H3	59	51	NA	–	–	–	ADC[0]_26	–
P8.4	GPIO_STD	H4	60	NA	NA	–	–	–	ADC[0]_27	–
P9.0	GPIO_STD	H1	61	52	NA	–	–	–	ADC[0]_28	–
P9.1	GPIO_STD	H2	62	53	NA	–	–	–	ADC[0]_29	–
P9.2	GPIO_STD	J1	63	NA	NA	–	–	–	ADC[0]_30	–
P9.3	GPIO_STD	J2	64	NA	NA	–	–	–	ADC[0]_31	–
P10.0	GPIO_STD	M1	65	54	NA	–	–	–	–	–
P10.1	GPIO_STD	N1	66	55	NA	–	–	–	–	–
P10.2	GPIO_STD	N2	67	56	NA	–	–	–	–	–
P10.3	GPIO_STD	N3	68	57	NA	–	–	–	–	–
P10.4	GPIO_STD	N4	69	58	NA	–	–	–	ADC[1]_0	–
P10.5	GPIO_STD	P1	70	NA	NA	–	–	–	ADC[1]_1	–
P10.6	GPIO_STD	P2	71	NA	NA	–	–	–	ADC[1]_2	–
P10.7	GPIO_STD	P3	72	NA	NA	–	–	–	ADC[1]_3	–
P11.0	GPIO_STD	M6	73	59	38	–	–	–	ADC[0]_M	–
P11.1	GPIO_STD	P4	74	60	39	–	–	–	ADC[1]_M	–

Notes
22. HCon refers to Hi-Speed I/O matrix connection reference as per **Table 14**.
23. Deep Sleep ordering (DS #0, DS #1, DS #2) does not have any impact on choosing any alternate functions; the HSIOM module handles the individual alternate function assignment.
24. All port pin functions available in Deep Sleep mode are also available in Active mode.
25. I/O pins that support an oscillator function (WCO or ECO) must be configured for high-Z if the oscillator is enabled.
26. This I/O has increased leakage to ground when the V_{DDD} supply is below the POR threshold.

Table 15 Pin selector and alternate pin functions in Deep Sleep (DS) Mode, Analog, Smart I/O (Preliminary) *(continued)*

Name	I/O type	Package				Deep Sleep mapping			Analog	SMART I/O
	HCon#0[22]	272-BGA	176-TEQFP	144-TEQFP	100-TEQFP	HCon#14	HCon#29	HCon#30		
		Pin	Pin	Pin	Pin	DS #0[23, 24]	DS #1	DS #2		
P11.2	GPIO_STD	R4	75	61	40	–	–	–	ADC[2]_M	–
P12.0	GPIO_STD	R1	80	66	45	–	–	–	ADC[1]_4	SMARTIO12_0
P12.1	GPIO_STD	R2	81	67	46	–	–	–	ADC[1]_5	SMARTIO12_1
P12.2	GPIO_STD	R3	82	68	47	–	–	–	ADC[1]_6	SMARTIO12_2
P12.3	GPIO_STD	T1	83	69	48	–	–	–	ADC[1]_7	SMARTIO12_3
P12.4	GPIO_STD	T2	84	70	49	–	–	–	ADC[1]_8	SMARTIO12_4
P12.5	GPIO_STD	T3	85	71	NA	–	–	–	ADC[1]_9	SMARTIO12_5
P12.6	GPIO_STD	U1	86	NA	NA	–	–	–	ADC[1]_10	SMARTIO12_6
P12.7	GPIO_STD	U2	87	NA	NA	–	–	–	ADC[1]_11	SMARTIO12_7
P13.0	GPIO_STD	V2	90	74	52	–	–	–	ADC[1]_12	SMARTIO13_0
P13.1	GPIO_STD	V3	91	75	53	–	–	–	ADC[1]_13	SMARTIO13_1
P13.2	GPIO_STD	U3	92	76	54	–	–	–	ADC[1]_14	SMARTIO13_2
P13.3	GPIO_STD	V4	93	77	55	–	–	–	ADC[1]_15	SMARTIO13_3
P13.4	GPIO_STD	U4	94	78	56	–	–	–	ADC[1]_16	SMARTIO13_4
P13.5	GPIO_STD	T4	95	79	57	–	–	–	ADC[1]_17	SMARTIO13_5
P13.6	GPIO_STD	U5	96	80	58	–	–	–	ADC[1]_18	SMARTIO13_6
P13.7	GPIO_STD	T5	97	81	59	–	–	–	ADC[1]_19	SMARTIO13_7
P14.0	GPIO_STD	V5	98	82	60	–	–	–	ADC[1]_20	SMARTIO14_0
P14.1	GPIO_STD	V6	99	83	61	–	–	–	ADC[1]_21	SMARTIO14_1
P14.2	GPIO_STD	U6	100	NA	NA	–	–	–	ADC[1]_22	SMARTIO14_2
P14.3	GPIO_STD	T6	101	NA	NA	–	–	–	ADC[1]_23	SMARTIO14_3
P14.4	GPIO_STD	R6	102	84	NA	–	–	–	ADC[1]_24	SMARTIO14_4
P14.5	GPIO_STD	N7	103	85	NA	–	–	–	ADC[1]_25	SMARTIO14_5
P14.6	GPIO_STD	T7	104	NA	NA	–	–	–	ADC[1]_26	SMARTIO14_6
P14.7	GPIO_STD	R7	105	NA	NA	–	–	–	ADC[1]_27	SMARTIO14_7
P15.0	GPIO_STD	V7	106	86	NA	–	–	–	ADC[1]_28	SMARTIO15_0

Notes
22. HCon refers to Hi-Speed I/O matrix connection reference as per **Table 14**.
23. Deep Sleep ordering (DS #0, DS #1, DS #2) does not have any impact on choosing any alternate functions; the HSIOM module handles the individual alternate function assignment.
24. All port pin functions available in Deep Sleep mode are also available in Active mode.
25. I/O pins that support an oscillator function (WCO or ECO) must be configured for high-Z if the oscillator is enabled.
26. This I/O has increased leakage to ground when the V_{DDD} supply is below the POR threshold.

Table 15 Pin selector and alternate pin functions in Deep Sleep (DS) Mode, Analog, Smart I/O (Preliminary) *(continued)*

Name	I/O type	Package				Deep Sleep mapping			Analog	SMART I/O
	HCon#0[22]	272-BGA	176-TEQFP	144-TEQFP	100-TEQFP	HCon#14	HCon#29	HCon#30		
		Pin	Pin	Pin	Pin	DS #0[23, 24]	DS #1	DS #2		
P15.1	GPIO_STD	U7	107	87	NA	–	–	–	ADC[1]_29	SMARTIO15_1
P15.2	GPIO_STD	V8	108	88	NA	–	–	–	ADC[1]_30	SMARTIO15_2
P15.3	GPIO_STD	U8	109	89	NA	–	–	–	ADC[1]_31	SMARTIO15_3
P16.0	GPIO_STD	V12	NA	NA	NA	–	–	–	–	–
P16.1	GPIO_STD	U12	NA	NA	NA	–	–	–	–	–
P16.2	GPIO_STD	V13	NA	NA	NA	–	–	–	–	–
P16.3	GPIO_STD	U13	115	NA	NA	–	–	–	–	–
P16.4	GPIO_STD	T13	NA	NA	NA	–	–	–	–	–
P16.5	GPIO_STD	R13	NA	NA	NA	–	–	–	–	–
P16.6	GPIO_STD	T14	NA	NA	NA	–	–	–	–	–
P16.7	GPIO_STD	N12	NA	NA	NA	–	–	–	–	–
P17.0	GPIO_STD	V14	116	95	NA	–	–	–	–	SMARTIO17_0
P17.1	GPIO_STD	U14	117	96	NA	–	–	–	–	SMARTIO17_1
P17.2	GPIO_STD	V15	118	97	NA	–	–	–	–	SMARTIO17_2
P17.3	GPIO_STD	U15	119	98	NA	–	–	–	–	SMARTIO17_3
P17.4	GPIO_STD	T15	120	99	NA	–	–	–	–	SMARTIO17_4
P17.5	GPIO_STD	V16	121	NA	NA	–	–	–	–	SMARTIO17_5
P17.6	GPIO_STD	U16	122	NA	NA	–	–	–	–	SMARTIO17_6
P17.7	GPIO_STD	V17	123	NA	NA	–	–	–	–	SMARTIO17_7
P18.0	GPIO_STD	U18	124	100	67	–	–	–	ADC[2]_0	–
P18.1	GPIO_STD	U17	125	101	68	–	–	–	ADC[2]_1	–
P18.2	GPIO_STD	T18	126	102	69	–	–	–	ADC[2]_2	–
P18.3	GPIO_STD	T17	127	103	70	–	–	–	ADC[2]_3	–
P18.4	GPIO_STD	T16	128	104	71	–	–	–	ADC[2]_4	–
P18.5	GPIO_STD	R16	129	105	72	–	–	–	ADC[2]_5	–
P18.6	GPIO_STD	R15	130	106	73	–	–	–	ADC[2]_6	–

Notes

22. HCon refers to Hi-Speed I/O matrix connection reference as per **Table 14**.
23. Deep Sleep ordering (DS #0, DS #1, DS #2) does not have any impact on choosing any alternate functions; the HSIOM module handles the individual alternate function assignment.
24. All port pin functions available in Deep Sleep mode are also available in Active mode.
25. I/O pins that support an oscillator function (WCO or ECO) must be configured for high-Z if the oscillator is enabled.
26. This I/O has increased leakage to ground when the V_{DDD} supply is below the POR threshold.

Table 15 Pin selector and alternate pin functions in Deep Sleep (DS) Mode, Analog, Smart I/O (Preliminary) *(continued)*

Name	I/O type	Package				Deep Sleep mapping			Analog	SMART I/O
	HCon#0[22]	272-BGA	176-TEQFP	144-TEQFP	100-TEQFP	HCon#14	HCon#29	HCon#30		
		Pin	Pin	Pin	Pin	DS #0[23, 24]	DS #1	DS #2		
P18.7	GPIO_STD	P15	131	107	74	–	–	–	ADC[2]_7	–
P19.0	GPIO_STD	R18	134	110	77	–	–	–	–	–
P19.1	GPIO_STD	R17	135	111	78	–	–	–	–	–
P19.2	GPIO_STD	P17	136	112	79	–	–	–	–	–
P19.3	GPIO_STD	P16	137	113	80	–	–	–	–	–
P19.4	GPIO_STD	N15	138	114	NA	–	–	–	–	–
P20.0	GPIO_STD	N16	139	115	NA	–	–	–	–	–
P20.1	GPIO_STD	M16	140	116	NA	–	–	–	–	–
P20.2	GPIO_STD	M15	141	117	NA	–	–	–	–	–
P20.3	GPIO_STD	M13	142	118	NA	–	–	–	–	–
P20.4	GPIO_STD	L16	143	NA	NA	–	–	–	–	–
P20.5	GPIO_STD	L15	144	NA	NA	–	–	–	–	–
P20.6	GPIO_STD	K16	145	NA	NA	–	–	–	–	–
P20.7	GPIO_STD	K15	146	NA	NA	–	–	–	–	–
P21.0	GPIO_STD	N17	147	119	81	–	–	–	WCO_IN[24]	–
P21.1	GPIO_STD	N18	148	120	82	–	–	–	WCO_OUT[24]	–
P21.2	GPIO_STD	M17	149	121	83	–	–	–	ECO_IN[24]	–
P21.3	GPIO_STD	M18	150	122	84	–	–	–	ECO_OUT[24]	–
P21.4	GPIO_STD	L17	151	NA	NA	–	–	–	HIBERNATE_WAKEUP[0][26]	–
XRES_L		K18	152	123	85	–	–	–	–	–
P21.5	GPIO_STD	K17	157	128	90	–	–	–	–	–
P21.6	GPIO_STD	J17	158	129	NA	–	–	–	–	–
P21.7	GPIO_STD	J16	159	NA	NA	–	RTC_CAL	–	–	–
DRV_VOUT		J18	160	130	91	–	–	–	–	–
P22.1	GPIO_STD	H18	161	131	92	–	–	–	EXT_PS_CTL0	–
P22.2	GPIO_STD	G18	162	132	93	–	–	–	EXT_PS_CTL1	–

Notes
22. HCon refers to Hi-Speed I/O matrix connection reference as per **Table 14**.
23. Deep Sleep ordering (DS #0, DS #1, DS #2) does not have any impact on choosing any alternate functions; the HSIOM module handles the individual alternate function assignment.
24. All port pin functions available in Deep Sleep mode are also available in Active mode.
25. I/O pins that support an oscillator function (WCO or ECO) must be configured for high-Z if the oscillator is enabled.
26. This I/O has increased leakage to ground when the V_{DDD} supply is below the POR threshold.

Table 15 Pin selector and alternate pin functions in Deep Sleep (DS) Mode, Analog, Smart I/O (Preliminary) *(continued)*

Name	I/O type	Package				Deep Sleep mapping			Analog	SMART I/O
	HCon#0[22]	272-BGA	176-TEQFP	144-TEQFP	100-TEQFP	HCon#14	HCon#29	HCon#30		
		Pin	Pin	Pin	Pin	DS #0[23, 24]	DS #1	DS #2		
P22.3	GPIO_STD	F18	163	133	94	–	–	–	EXT_PS_CTL2	–
P22.4	GPIO_STD	H17	164	134	NA	–	–	–	–	–
P22.5	GPIO_STD	H16	165	135	NA	–	–	–	–	–
P22.6	GPIO_STD	H15	166	136	NA	–	–	–	–	–
P22.7	GPIO_STD	G17	167	NA	NA	–	–	–	–	–
P23.0	GPIO_STD	G16	168	137	NA	–	–	–	–	–
P23.1	GPIO_STD	G15	169	138	NA	–	–	–	–	–
P23.2	GPIO_STD	G13	170	NA	NA	–	–	–	–	–
P23.3	GPIO_STD	F17	171	139	95	–	–	–	–	–
P23.4	GPIO_STD	F16	172	140	96	–	SWJ_SWO_TDO	–	–	–
P23.5	GPIO_STD	F15	173	141	97	–	SWJ_SWCLK_TCLK	–	–	–
P23.6	GPIO_STD	E18	174	142	98	–	SWJ_SWDIO_TMS	–	–	–
P23.7	GPIO_STD	E17	175	143	99	–	SWJ_SWDOE_TDI	–	HIBERNATE_WAKEUP[1][26]	–
P24.0	HSIO_STD	J3	NA	NA	NA	–	–	–	–	–
P24.1	HSIO_STD	J4	NA	NA	NA	–	–	–	–	–
P24.2	HSIO_STD	K1	NA	NA	NA	–	–	–	–	–
P24.3	HSIO_STD	K2	NA	NA	NA	–	–	–	–	–
P24.4	HSIO_STD	K3	NA	NA	NA	–	–	–	–	–
P25.0	HSIO_STD	K4	NA	NA	NA	–	–	–	–	–
P25.1	HSIO_STD	L1	NA	NA	NA	–	–	–	–	–
P25.2	HSIO_STD	L2	NA	NA	NA	–	–	–	–	–
P25.3	HSIO_STD	L3	NA	NA	NA	–	–	–	–	–
P25.4	HSIO_STD	L4	NA	NA	NA	–	–	–	–	–
P25.5	HSIO_STD	M2	NA	NA	NA	–	–	–	–	–
P25.6	HSIO_STD	M3	NA	NA	NA	–	–	–	–	–
P25.7	HSIO_STD	M4	NA	NA	NA	–	–	–	–	–

Notes

22. HCon refers to Hi-Speed I/O matrix connection reference as per **Table 14**.
23. Deep Sleep ordering (DS #0, DS #1, DS #2) does not have any impact on choosing any alternate functions; the HSIOM module handles the individual alternate function assignment.
24. All port pin functions available in Deep Sleep mode are also available in Active mode.
25. I/O pins that support an oscillator function (WCO or ECO) must be configured for high-Z if the oscillator is enabled.
26. This I/O has increased leakage to ground when the V_{DDD} supply is below the POR threshold.

Table 15 Pin selector and alternate pin functions in Deep Sleep (DS) Mode, Analog, Smart I/O (Preliminary) *(continued)*

Name	I/O type	Package				Deep Sleep mapping			Analog	SMART I/O
	HCon#0[22]	272-BGA	176-TEQFP	144-TEQFP	100-TEQFP	HCon#14	HCon#29	HCon#30		
		Pin	Pin	Pin	Pin	DS #0[23, 24]	DS #1	DS #2		
P26.0	GPIO_STD	T8	NA	NA	NA	–	–	–	–	–
P26.1	GPIO_STD	R8	NA	NA	NA	–	–	–	–	–
P26.2	GPIO_STD	V9	NA	NA	NA	–	–	–	–	–
P26.3	GPIO_STD	U9	NA	NA	NA	–	–	–	–	–
P26.4	GPIO_STD	T9	NA	NA	NA	–	–	–	–	–
P26.5	GPIO_STD	R9	NA	NA	NA	–	–	–	–	–
P26.6	GPIO_STD	V10	NA	NA	NA	–	–	–	–	–
P26.7	GPIO_STD	U10	NA	NA	NA	–	–	–	–	–
P27.0	GPIO_STD	T10	NA	NA	NA	–	–	–	–	–
P27.1	GPIO_STD	R10	NA	NA	NA	–	–	–	–	–
P27.2	GPIO_STD	V11	NA	NA	NA	–	–	–	–	–
P27.3	GPIO_STD	U11	NA	NA	NA	–	–	–	–	–
P27.4	GPIO_STD	T11	NA	NA	NA	–	–	–	–	–
P27.5	GPIO_STD	R11	NA	NA	NA	–	–	–	–	–
P27.6	GPIO_STD	T12	NA	NA	NA	–	–	–	–	–
P27.7	GPIO_STD	R12	NA	NA	NA	–	–	–	–	–
P28.0	GPIO_STD	E16	NA	NA	NA	–	–	–	–	–
P28.1	GPIO_STD	E15	NA	NA	NA	–	–	–	–	–
P28.2	GPIO_STD	D18	NA	NA	NA	–	–	–	–	–
P28.3	GPIO_STD	D17	NA	NA	NA	–	–	–	–	–
P28.4	GPIO_STD	D16	NA	NA	NA	–	–	–	–	–
P28.5	GPIO_STD	C18	NA	NA	NA	–	–	–	–	–
P28.6	GPIO_STD	C17	NA	NA	NA	–	–	–	–	–
P28.7	GPIO_STD	C16	NA	NA	NA	–	–	–	–	–
P29.0	GPIO_STD	A11	NA	NA	NA	–	–	–	–	–
P29.1	GPIO_STD	A10	NA	NA	NA	–	–	–	–	–

Notes
22. HCon refers to Hi-Speed I/O matrix connection reference as per **Table 14**.
23. Deep Sleep ordering (DS #0, DS #1, DS #2) does not have any impact on choosing any alternate functions; the HSIOM module handles the individual alternate function assignment.
24. All port pin functions available in Deep Sleep mode are also available in Active mode.
25. I/O pins that support an oscillator function (WCO or ECO) must be configured for high-Z if the oscillator is enabled.
26. This I/O has increased leakage to ground when the V_{DDD} supply is below the POR threshold.

Table 15 Pin selector and alternate pin functions in Deep Sleep (DS) Mode, Analog, Smart I/O (Preliminary) *(continued)*

Name	I/O type	Package				Deep Sleep mapping			Analog	SMART I/O
	HCon#0[22]	272-BGA	176-TEQFP	144-TEQFP	100-TEQFP	HCon#14	HCon#29	HCon#30		
		Pin	Pin	Pin	Pin	DS #0[23, 24]	DS #1	DS #2		
P29.2	GPIO_STD	B10	NA	NA	NA	–	–	–	–	–
P29.3	GPIO_STD	C10	NA	NA	NA	–	–	–	–	–
P29.4	GPIO_STD	D10	NA	NA	NA	–	–	–	–	–
P29.5	GPIO_STD	A9	NA	NA	NA	–	–	–	–	–
P29.6	GPIO_STD	B9	NA	NA	NA	–	–	–	–	–
P29.7	GPIO_STD	C9	NA	NA	NA	–	–	–	–	–
P30.0	GPIO_STD	B7	NA	NA	NA	–	–	–	–	–
P30.1	GPIO_STD	C7	NA	NA	NA	–	–	–	–	–
P30.2	GPIO_STD	D7	NA	NA	NA	–	–	–	–	–
P30.3	GPIO_STD	F7	NA	NA	NA	–	–	–	–	–
P31.0	GPIO_STD	A5	NA	NA	NA	–	–	–	–	–
P31.1	GPIO_STD	B5	NA	NA	NA	–	–	–	–	–
P31.2	GPIO_STD	A4	NA	NA	NA	–	–	–	–	–
P32.0	GPIO_STD	C1	NA	NA	NA	–	–	–	ADC[0]_8	–
P32.1	GPIO_STD	C2	NA	NA	NA	–	–	–	ADC[0]_9	–
P32.2	GPIO_STD	D1	NA	NA	NA	–	–	–	ADC[0]_10	–
P32.3	GPIO_STD	D2	NA	NA	NA	–	–	–	ADC[0]_11	–
P32.4	GPIO_STD	D3	NA	NA	NA	–	–	–	ADC[0]_12	–
P32.5	GPIO_STD	D4	NA	NA	NA	–	–	–	ADC[0]_13	–
P32.6	GPIO_STD	E3	NA	NA	NA	–	–	–	ADC[0]_14	–
P32.7	GPIO_STD	E4	NA	NA	NA	–	–	–	ADC[0]_15	–

Notes
22. HCon refers to Hi-Speed I/O matrix connection reference as per **Table 14**.
23. Deep Sleep ordering (DS #0, DS #1, DS #2) does not have any impact on choosing any alternate functions; the HSIOM module handles the individual alternate function assignment.
24. All port pin functions available in Deep Sleep mode are also available in Active mode.
25. I/O pins that support an oscillator function (WCO or ECO) must be configured for high-Z if the oscillator is enabled.
26. This I/O has increased leakage to ground when the V_{DDD} supply is below the POR threshold.

12 Power pin assignments

Table 16 Power pin assignments

Power pin name	Package				Remarks
	272-BGA	176-TEQFP	144-TEQFP	100-TEQFP	
VDDD	F8, H13, J13, K13, L13, N11	22, 43, 110, 132, 153, 176	18, 35, 90, 108, 124, 144	12, 24, 62, 75, 86, 100	Main digital supply
VSSD	A1, A18, D9, G7, G12, H9, H10, H11, J9, J10, J11, J15, K9, K10, K11, M7, M12, R5, R14, V1, V18, L9, L10	1, 23, 45, 89, 114, 133, 154, 155	1, 19, 37, 73, 94, 109, 125, 126	1, 13, 26, 51, 66, 76, 87, 88	Main digital ground
VSSD_1	L11	NA	NA	NA	Digital Ground
VSSD_2	L18, P18	NA	NA	NA	Noise guard for ECO inputs
VDDIO_1	F9, F10, F11	44	36	25	I/O supply (except analog I/Os on VDDA)
VDDIO_2	N8, N9, N10	88	72	50	I/O supply (except analog I/Os on VDDA)
VDDIO_3	H6, J6	NA	NA	NA	I/O supply for high speed domain#0 (HSIO_STD), P24, P25
VSSIO_3	H8, J8	NA	NA	NA	HSIO ground
VCCD[27]	F6, F13, N6, N13	46, 47, 111, 112, 113, 156	38, 39, 91, 92, 93, 127	27, 28, 63, 64, 65, 89	Main regulated supply. Driven by LDO regulator (either internal LDO or external LDO/PMIC)
VREFH	K6	79	65	44	High-reference voltage for SAR ADCs
VREFL	K8	76	62	41	Low-reference voltage for SAR ADCs
VDDA	L6	78	64	43	Main analog supply for SAR ADCs
VSSA	L8	77	63	42	Main analog ground
XRES_L	K18	152	123	85	Active LOW external reset input
DRV_VOUT	J18	160	130	91	Dedicated external supply control pin

Note
27. The V_{CCD} pins must be connected together to ensure a low-impedance connection. (see the requirement in **Figure 16**).

13 Alternate function pin assignments

Table 17 Alternate pin functions in Active Mode (Preliminary) [24, 30, 31]

Port Pin	Active Mapping															
	HCon#8 [28]	HCon#9	HCon#10	HCon#11	HCon#16	HCon#17	HCon#18	HCon#19	HCon#20	HCon#21	HCon#22	HCon#23	HCon#24	HCon#25	HCon#26	HCon#27
	ACT #0[29]	ACT #1	ACT #2	ACT #3	ACT #4	ACT #5	ACT #6	ACT #7	ACT #8	ACT #9	ACT #10	ACT #11	ACT #12	ACT #13	ACT #14	ACT #15
P0.0	PWM_18	PWM_22_N	TC_18_TR0	TC_22_TR1	–	SCB0_RX (0)	SCB7_SDA(2)	–	–	–	–	–	–	–	–	–
P0.1	PWM_17	PWM_18_N	TC_17_TR0	TC_18_TR1	–	SCB0_TX(0)	SCB7_SCL(2)	–	–	–	–	–	–	–	–	–
P0.2	PWM_14	PWM_17_N	TC_14_TR0	TC_17_TR1	–	SCB0_RTS (0)	–	SCB4_MISO (2)	–	CAN0_1_TX	–	–	–	–	–	–
P0.3	PWM_13	PWM_14_N	TC_13_TR0	TC_14_TR1	–	SCB0_CTS (0)	–	SCB4_MOSI (2)	–	CAN0_1_RX	–	–	–	–	–	–
P1.0	PWM_12	PWM_13_N	TC_12_TR0	TC_13_TR1	PWM_H_4	–	–	SCB4_CLK(2)	–	–	–	–	–	–	–	–
P1.1	PWM_11	PWM_12_N	TC_11_TR0	TC_12_TR1	PWM_H_5	–	–	SCB4_SEL0 (2)	–	–	–	–	–	–	–	–
P1.2	PWM_10	PWM_11_N	TC_10_TR0	TC_11_TR1	PWM_H_6	–	–	–	–	–	–	–	–	–	TRIG_IN[0]	–
P1.3	PWM_8	PWM_10_N	TC_8_TR0	TC_10_TR1	PWM_H_7	–	–	–	–	–	–	–	–	–	TRIG_IN[1]	–
P1.4	–	–	–	–	–	–	–	–	–	–	–	–	–	–	–	–
P2.0	PWM_7	PWM_8_N	TC_7_TR0	TC_8_TR1	TC_H_4_TR0	SCB7_RX(0)	–	SCB7_MISO (0)	–	CAN0_0_TX	–	–	–	–	TRIG_IN[2]	–
P2.1	PWM_6	PWM_7_N	TC_6_TR0	TC_7_TR1	TC_H_5_TR0	SCB7_TX(0)	SCB7_SDA(0)	SCB7_MOSI (0)	–	CAN0_0_RX	–	–	–	–	TRIG_IN[3]	–
P2.2	PWM_5	PWM_6_N	TC_5_TR0	TC_6_TR1	TC_H_6_TR0	SCB7_RTS(0)	SCB7_SCL(0)	SCB7_CLK(0)	–	–	–	–	ETH0_RX_ER(0)	–	TRIG_IN[4]	–
P2.3	PWM_4	PWM_5_N	TC_4_TR0	TC_5_TR1	TC_H_7_TR0	SCB7_CTS(0)	–	SCB7_SEL0 (0)	–	–	–	–	ETH0_ETH_T-SU_TIMER_C-MP_VAL(0)	–	TRIG_IN[5]	–
P2.4	PWM_3	PWM_4_N	TC_3_TR0	TC_4_TR1	PWM_H_4_N	–	–	SCB7_SEL1 (0)	–	–	–	–	–	–	TRIG_IN[6]	–
P2.5	PWM_2	PWM_3_N	TC_2_TR0	TC_3_TR1	PWM_H_5_N	–	–	SCB7_SEL2 (0)	–	–	–	–	–	–	TRIG_IN[7]	–
P2.6	–	–	–	–	–	–	–	–	–	–	–	–	–	–	–	–
P2.7	–	–	–	–	–	–	–	–	–	–	–	–	–	–	–	–
P3.0	PWM_1	PWM_2_N	TC_1_TR0	TC_2_TR1	PWM_H_6_N	SCB6_RX (0)	–	SCB6_MISO (0)	–	CAN0_3_TX	–	–	ETH0_MDIO(0)	–	–	TRIG_DBG [0]
P3.1	PWM_0	PWM_1_N	TC_0_TR0	TC_1_TR1	PWM_H_7_N	SCB6_TX(0)	SCB6_SDA(0)	SCB6_MOSI (0)	–	CAN0_3_RX	–	–	ETH0_MDC(0)	–	–	TRIG_DBG [1]

Notes
28. Hi-Speed I/O matrix connection (HCon) reference as per **Table 14**.
29. Active Mode ordering (ACT #0, ACT #1, and so on) does not have any impact on configuring alternate functions; the HSIOM module handles the alternate function assignments.
30. See **Table 18** for more information on pin multiplexer abbreviations used.
31. For any function marked with an identifier (n), the AC timing is only guaranteed within the respective group "n".

Table 17 Alternate pin functions in Active Mode (Preliminary) *(continued)*[24, 30, 31]

Port Pin	Active Mapping															
	HCon#8 [28]	HCon#9	HCon#10	HCon#11	HCon#16	HCon#17	HCon#18	HCon#19	HCon#20	HCon#21	HCon#22	HCon#23	HCon#24	HCon#25	HCon#26	HCon#27
	ACT #0[29]	ACT #1	ACT #2	ACT #3	ACT #4	ACT #5	ACT #6	ACT #7	ACT #8	ACT #9	ACT #10	ACT #11	ACT #12	ACT #13	ACT #14	ACT #15
P3.2	PWM_M_3	PWM_0_N	TC_M_3_TR0	TC_0_TR1	TC_H_4_TR1	SCB6_RTS(0)	SCB6_SCL(0)	SCB6_CLK(0)	–	–	–	–	–	–	–	–
P3.3	PWM_M_2	PWM_M_3_N	TC_M_2_TR0	TC_M_3_TR1	TC_H_5_TR1	SCB6_CTS(0)		SCB6_SEL0(0)	–	–	–	–	–	–	–	–
P3.4	PWM_M_1	PWM_M_2_N	TC_M_1_TR0	TC_M_2_TR1	TC_H_6_TR1	–	–	SCB6_SEL1(0)	–	–	–	–	–	–	–	–
P3.5	PWM_M_0	PWM_M_1_N	TC_M_0_TR0	TC_M_1_TR1	TC_H_7_TR1	–	–	SCB6_SEL2(0)	–	–	–	–	–	–	–	–
P3.6	–	–	–	–	–	–	–	SCB8_SEL2(0)		CAN1_2_TX	–	–	–	–	–	–
P3.7	–	–	–	–	–	–	–	–	–	CAN1_2_RX	–	–	–	–	–	–
P4.0	PWM_4	PWM_M_0_N	TC_4_TR0	TC_M_0_TR1	EXT_MUX[0]_0	SCB5_RX(0)	–	SCB5_MISO(0)	–	–	–	–	–	–	TRIG_IN[10]	–
P4.1	PWM_5	PWM_4_N	TC_5_TR0	TC_4_TR1	EXT_MUX[0]_1	SCB5_TX(0)	SCB5_SDA(0)	SCB5_MOSI(0)	–	–	–	–	–	–	TRIG_IN[11]	–
P4.2	PWM_6	PWM_5_N	TC_6_TR0	TC_5_TR1	EXT_MUX[0]_2	SCB5_RTS(0)	SCB5_SCL(0)	SCB5_CLK(0)	–	–	–	–	–	–	TRIG_IN[12]	–
P4.3	PWM_7	PWM_6_N	TC_7_TR0	TC_6_TR1	EXT_MUX[0]_EN	SCB5_CTS(0)		SCB5_SEL0(0)	–	CAN0_1_TX	–	–	–	–	TRIG_IN[13]	–
P4.4	PWM_8	PWM_7_N	TC_8_TR0	TC_7_TR1	–	–	–	SCB5_SEL1(0)	–	CAN0_1_RX	–	–	–	–	–	–
P5.0	PWM_9	PWM_8_N	TC_9_TR0	TC_8_TR1	–	–	–	SCB5_SEL2(0)	–	–	–	–	–	–	–	–
P5.1	PWM_10	PWM_9_N	TC_10_TR0	TC_9_TR1	–	–	–	SCB9_SEL3(0)	–	–	–	–	–	–	–	–
P5.2	PWM_11	PWM_10_N	TC_11_TR0	TC_10_TR1	–	–	–	–	–	–	–	–	–	–	–	–
P5.3	PWM_12	PWM_11_N	TC_12_TR0	TC_11_TR1	–	–	–	–	–	–	–	–	–	–	–	–
P5.4	PWM_13	PWM_12_N	TC_13_TR0	TC_12_TR1	–	–	–	–	–	–	–	–	–	–	–	–
P5.5	PWM_14	PWM_13_N	TC_14_TR0	TC_13_TR1	–	–	–	–	–	–	–	–	–	–	–	–
P6.0	PWM_M_0	PWM_14_N	TC_M_0_TR0	TC_14_TR1	–	SCB4_RX(0)	–	SCB4_MISO(0)	–	–	–	–	–	–	–	–
P6.1	PWM_0	PWM_M_0_N	TC_0_TR0	TC_M_0_TR1	–	SCB4_TX(0)	SCB4_SDA(0)	SCB4_MOSI(0)	–	–	–	–	–	–	–	–
P6.2	PWM_M_1	PWM_0_N	TC_M_1_TR0	TC_0_TR1	–	SCB4_RTS(0)	SCB4_SCL(0)	SCB4_CLK(0)	–	CAN0_2_TX	–	–	–	SDHC_-CARD_-MECH_WRITE_PROT(0)	–	–

Notes
28. Hi-Speed I/O matrix connection (HCon) reference as per **Table 14**.
29. Active Mode ordering (ACT #0, ACT #1, and so on) does not have any impact on configuring alternate functions; the HSIOM module handles the alternate function assignments.
30. See **Table 18** for more information on pin multiplexer abbreviations used.
31. For any function marked with an identifier (n), the AC timing is only guaranteed within the respective group "n".

Table 17 Alternate pin functions in Active Mode (Preliminary) *(continued)*[24, 30, 31]

Port Pin	Active Mapping															
	HCon#8 [28]	HCon#9	HCon#10	HCon#11	HCon#16	HCon#17	HCon#18	HCon#19	HCon#20	HCon#21	HCon#22	HCon#23	HCon#24	HCon#25	HCon#26	HCon#27
	ACT #0[29]	ACT #1	ACT #2	ACT #3	ACT #4	ACT #5	ACT #6	ACT #7	ACT #8	ACT #9	ACT #10	ACT #11	ACT #12	ACT #13	ACT #14	ACT #15
P6.3	PWM_1	PWM_M_1_N	TC_1_TR0	TC_M_1_TR1	–	SCB4_CTS (0)	–	SCB4_SEL0 (0)	–	CAN0_2_RX	–	SPIHB_CLK (0)	–	SDHC_-CARD_CMD (0)	–	CAL_SUP_NZ
P6.4	PWM_M_2	PWM_1_N	TC_M_2_TR0	TC_1_TR1	–	–	–	SCB4_SEL1 (0)	–	–	–	SPIHB_RWDS(0)	–	SDHC_-CLK_CARD(0)	–	–
P6.5	PWM_2	PWM_M_2_N	TC_2_TR0	TC_M_2_TR1	–	–	–	SCB4_SEL2 (0)	–	–	–	SPIHB_SEL0 (0)	–	SDHC_-CARD_DE-TECT_N(0)	–	–
P6.6	PWM_M_3	PWM_2_N	TC_M_3_TR0	TC_2_TR1	–	–	–	SCB4_SEL3 (0)	–	–	–	–	–	–	TRIG_IN[8]	–
P6.7	PWM_3	PWM_M_3_N	TC_3_TR0	TC_M_3_TR1	–	–	–		–	–	–	–	–	–	TRIG_IN[9]	–
P7.0	PWM_M_4	PWM_3_N	TC_M_4_TR0	TC_3_TR1	–	SCB5_RX (1)	–	SCB5_MISO (1)	–	–	–	SPIHB_SEL1 (0)	–	SDHC_-CARD_IF_P-WR_EN(0)	–	–
P7.1	PWM_15	PWM_M_4_N	TC_15_TR0	TC_M_4_TR1	–	SCB5_TX(1)	SCB5_SDA(1)	SCB5_MOSI (1)	–	–	–	SPIHB_-DATA0(0)	–	SDHC_-CARD_-DAT_3-TO0_0(0)	–	–
P7.2	PWM_M_5	PWM_15_N	TC_M_5_TR0	TC_15_TR1	–	SCB5_RTS (1)	SCB5_SCL(1)	SCB5_CLK(1)	–	–	–	SPIHB_-DATA1(0)	–	SDHC_-CARD_-DAT_3-TO0_1(0)	–	–
P7.3	PWM_16	PWM_M_5_N	TC_16_TR0	TC_M_5_TR1	–	SCB5_CTS (1)	–	SCB5_SEL0 (1)	–	–	–	SPIHB_-DATA2(0)	–	SDHC_-CARD_-DAT_3-TO0_2(0)	–	–
P7.4	PWM_M_6	PWM_16_N	TC_M_6_TR0	TC_16_TR1	–	–	–	SCB5_SEL1 (1)	–	–	–	SPIHB_-DATA3(0)	–	SDHC_-CARD_-DAT_3-TO0_3(0)	–	–
P7.5	PWM_17	PWM_M_6_N	TC_17_TR0	TC_M_6_TR1	–	–	–	SCB5_SEL2 (1)	–	–	–	SPIHB_-DATA4(0)	–	SDHC_-CARD_-DAT_7-TO4_0(0)	–	–
P7.6	PWM_M_7	PWM_17_N	TC_M_7_TR0	TC_17_TR1	–	–	–	–	–	–	–	–	–	–	TRIG_IN[16]	–
P7.7	PWM_18	PWM_M_7_N	TC_18_TR0	TC_M_7_TR1	–	–	–	–	–	–	–	–	–	–	TRIG_IN[17]	–
P8.0	PWM_19	PWM_18_N	TC_19_TR0	TC_18_TR1	–	–	–	–	–	CAN0_0_TX	–	SPIHB_-DATA5(0)	–	SDHC_-CARD_-DAT_7-TO4_1(0)	–	–

Notes
28. Hi-Speed I/O matrix connection (HCon) reference as per **Table 14**.
29. Active Mode ordering (ACT #0, ACT #1, and so on) does not have any impact on configuring alternate functions; the HSIOM module handles the alternate function assignments.
30. See **Table 18** for more information on pin multiplexer abbreviations used.
31. For any function marked with an identifier (n), the AC timing is only guaranteed within the respective group "n".

Table 17 Alternate pin functions in Active Mode (Preliminary) *(continued)*[24, 30, 31]

Port Pin	Active Mapping															
	HCon#8 [28]	HCon#9	HCon#10	HCon#11	HCon#16	HCon#17	HCon#18	HCon#19	HCon#20	HCon#21	HCon#22	HCon#23	HCon#24	HCon#25	HCon#26	HCon#27
	ACT #0[29]	ACT #1	ACT #2	ACT #3	ACT #4	ACT #5	ACT #6	ACT #7	ACT #8	ACT #9	ACT #10	ACT #11	ACT #12	ACT #13	ACT #14	ACT #15
P8.1	PWM_20	PWM_19_N	TC_20_TR0	TC_19_TR1	–	–	–	–	–	CAN0_0_RX	–	SPIHB_-DATA6(0)	–	SDHC_-CARD_-DAT_7-TO4_2(0)	TRIG_IN[14]	–
P8.2	PWM_21	PWM_20_N	TC_21_TR0	TC_20_TR1	–	–	–	–	–	–	–	SPIHB_-DATA7(0)	–	SDHC_-CARD_-DAT_7-TO4_3(0)	TRIG_IN[15]	–
P8.3	PWM_22	PWM_21_N	TC_22_TR0	TC_21_TR1	–	–	–	–	–	–	–	–	–	–	–	TRIG_DBG[0]
P8.4	PWM_23	PWM_22_N	TC_23_TR0	TC_22_TR1	–	–	–	–	–	–	–	–	–	–	–	TRIG_DBG[1]
P9.0	PWM_24	PWM_23_N	TC_24_TR0	TC_23_TR1	–	–	–	–	–	–	–	–	–	–	–	–
P9.1	PWM_25	PWM_24_N	TC_25_TR0	TC_24_TR1	–	–	–	–	–	–	–	–	–	–	–	–
P9.2	PWM_26	PWM_25_N	TC_26_TR0	TC_25_TR1	–	–	–	–	–	–	–	–	–	–	–	–
P9.3	PWM_27	PWM_26_N	TC_27_TR0	TC_26_TR1	–	–	–	–	–	–	–	–	–	–	–	–
P10.0	PWM_28	PWM_27_N	TC_28_TR0	TC_27_TR1	–	SCB4_RX (1)		SCB4_MISO (1)	–	–	–	–	–		TRIG_IN[18]	–
P10.1	PWM_29	PWM_28_N	TC_29_TR0	TC_28_TR1	–	SCB4_TX(1)	SCB4_SDA(1)	SCB4_MOSI (1)	–	–	–	–	–		TRIG_IN[19]	–
P10.2	PWM_30	PWM_29_N	TC_30_TR0	TC_29_TR1	–	SCB4_RTS (1)	SCB4_SCL(1)	SCB4_CLK(1)	–	–	–	–	–		–	–
P10.3	PWM_31	PWM_30_N	TC_31_TR0	TC_30_TR1	–	SCB4_CTS (1)	–	SCB4_SEL0 (1)	–	–	–	–	–		–	–
P10.4	PWM_32	PWM_31_N	TC_32_TR0	TC_31_TR1	–	–	–	SCB4_SEL1 (1)	–	–	–	–	–		–	–
P10.5	PWM_33	PWM_32_N	TC_33_TR0	TC_32_TR1	–	–	–	SCB4_SEL2 (1)	–	–	–	–	–		–	–
P10.6		PWM_33_N		TC_33_TR1	–	–	–	–	–	–	PWM_34	–	–		–	–
P10.7	PWM_35	PWM_34_N	TC_35_TR0	TC_34_TR1	–	–	–	–	–	–	–	–	–		–	–
P11.0	PWM_61	PWM_62_N	TC_61_TR0	TC_62_TR1	–	–	–	–	–	–	–	–	–	AUDIOSS0_MCLK	–	–
P11.1	PWM_60	PWM_61_N	TC_60_TR0	TC_61_TR1	–	–	–	–	–	–	–	–	–	AUDIOSS0_TX_SCK	–	–
P11.2	PWM_59	PWM_60_N	TC_59_TR0	TC_60_TR1	–	–	–	–	–	–	–	–	–	AUDIOSS0_TX_WS	–	–

Notes
28. Hi-Speed I/O matrix connection (HCon) reference as per **Table 14**.
29. Active Mode ordering (ACT #0, ACT #1, and so on) does not have any impact on configuring alternate functions; the HSIOM module handles the alternate function assignments.
30. See **Table 18** for more information on pin multiplexer abbreviations used.
31. For any function marked with an identifier (n), the AC timing is only guaranteed within the respective group "n".

Table 17 Alternate pin functions in Active Mode (Preliminary) *(continued)*[24, 30, 31]

Port Pin	Active Mapping															
	HCon#8 [28]	HCon#9	HCon#10	HCon#11	HCon#16	HCon#17	HCon#18	HCon#19	HCon#20	HCon#21	HCon#22	HCon#23	HCon#24	HCon#25	HCon#26	HCon#27
	ACT #0[29]	ACT #1	ACT #2	ACT #3	ACT #4	ACT #5	ACT #6	ACT #7	ACT #8	ACT #9	ACT #10	ACT #11	ACT #12	ACT #13	ACT #14	ACT #15
P12.0	PWM_36		TC_36_TR0		–	SCB8_RX(0)	–	SCB8_MISO(0)	–	CAN0_2_TX	–	PWM_35_N	–	AUDIOSS0_TX_SDO	TRIG_IN[20]	–
P12.1	PWM_37	PWM_36_N	TC_37_TR0	TC_36_TR1	–	SCB8_TX(0)	SCB8_SDA(0)	SCB8_MOSI(0)	–	CAN0_2_RX	–	–	–	AUDIOSS0_-CLK_I2S_IF	TRIG_IN[21]	–
P12.2	PWM_38	PWM_37_N	TC_38_TR0	TC_37_TR1	EXT_MUX[1]_EN	SCB8_RTS(0)	SCB8_SCL(0)	SCB8_CLK(0)	–	–	–	–	–	AUDIOSS0_RX_SCK	–	–
P12.3	PWM_39	PWM_38_N	TC_39_TR0	TC_38_TR1	EXT_MUX[1]_0	SCB8_CTS(0)	–	SCB8_SEL0(0)	–	–	–	–	–	AUDIOSS0_RX_WS	–	–
P12.4	PWM_40	PWM_39_N	TC_40_TR0	TC_39_TR1	EXT_MUX[1]_1	–	–	SCB8_SEL1(0)		CAN1_1_TX	–	–	–	AUDIOSS0_RX_SDI	–	–
P12.5	PWM_41	PWM_40_N	TC_41_TR0	TC_40_TR1	EXT_MUX[1]_2	–	–	–	–	CAN1_1_RX	–	–	–	–	–	–
P12.6	PWM_42	PWM_41_N	TC_42_TR0	TC_41_TR1	–	–	–	–	–	–	–	–	–	–	–	–
P12.7	PWM_43	PWM_42_N	TC_43_TR0	TC_42_TR1	–	–	–	–	–	–	–	–	–	–	–	–
P13.0	PWM_M_8	PWM_43_N	TC_M_8_TR0	TC_43_TR1	EXT_MUX[2]_0	SCB3_RX(0)	–	–	–	SCB3_MISO(0)	–	–	–	AUDIOSS1_MCLK	–	–
P13.1	PWM_44	PWM_M_8_N	TC_44_TR0	TC_M_8_TR1	EXT_MUX[2]_1	SCB3_TX(0)	SCB3_SDA(0)	–	–	SCB3_MOSI(0)	–	–	–	AUDIOSS1_TX_SCK	–	–
P13.2	PWM_M_9	PWM_44_N	TC_M_9_TR0	TC_44_TR1	EXT_MUX[2]_2	SCB3_RTS(0)	SCB3_SCL(0)	–	–	SCB3_CLK(0)	–	–	–	AUDIOSS1_TX_WS	–	–
P13.3	PWM_45	PWM_M_9_N	TC_45_TR0	TC_M_9_TR1	EXT_MUX[2]_EN	SCB3_CTS(0)	–	–	–	SCB3_SEL0(0)	–	–	–	AUDIOSS1_TX_SDO	–	–
P13.4	PWM_M_10	PWM_45_N	TC_M_10_TR0	TC_45_TR1	PWM_H_4	–	–	–	–	SCB3_SEL1(0)	–	–	–	AUDIOSS1_-CLK_I2S_IF	–	–
P13.5	PWM_46	PWM_M_10_N	TC_46_TR0	TC_M_10_TR1	PWM_H_4_N	–	–	–	–	SCB3_SEL2(0)	–	–	–	AUDIOSS1_RX_SCK	–	–
P13.6	PWM_M_11	PWM_46_N	TC_M_11_TR0	TC_46_TR1	PWM_H_5	–	–	–	–	SCB3_SEL3(0)	–	–	–	AUDIOSS1_RX_WS	TRIG_IN[22]	–
P13.7	PWM_47	PWM_M_11_N	TC_47_TR0	TC_M_11_TR1	PWM_H_5_N	–	–	–	–		–	–	–	AUDIOSS1_RX_SDI	TRIG_IN[23]	–
P14.0	PWM_48	PWM_47_N	TC_48_TR0	TC_47_TR1	PWM_H_6	SCB2_MISO(0)	–	SCB2_RX(0)	–	CAN1_0_TX	–	–	–	AUDIOSS2_MCLK	–	–
P14.1	PWM_49	PWM_48_N	TC_49_TR0	TC_48_TR1	PWM_H_6_N	SCB2_MOSI(0)	SCB2_SDA(0)	SCB2_TX(0)	–	CAN1_0_RX	–	–	–	AUDIOSS2_TX_SCK	–	–
P14.2	PWM_50	PWM_49_N	TC_50_TR0	TC_49_TR1	PWM_H_7	SCB2_CLK(0)	SCB2_SCL(0)	SCB2_RTS(0)	–	–	–	–	–	–	–	–
P14.3	PWM_51	PWM_50_N	TC_51_TR0	TC_50_TR1	PWM_H_7_N	SCB2_SEL0(0)	–	SCB2_CTS(0)	–	–	–	–	–	–	–	–
P14.4	PWM_52	PWM_51_N	TC_52_TR0	TC_51_TR1	TC_H_4_TR0	SCB2_SEL1(0)	–	–	–	–	–	–	–	AUDIOSS2_TX_WS	–	–

Notes
28. Hi-Speed I/O matrix connection (HCon) reference as per **Table 14**.
29. Active Mode ordering (ACT #0, ACT #1, and so on) does not have any impact on configuring alternate functions; the HSIOM module handles the alternate function assignments.
30. See **Table 18** for more information on pin multiplexer abbreviations used.
31. For any function marked with an identifier (n), the AC timing is only guaranteed within the respective group "n".

Table 17 Alternate pin functions in Active Mode (Preliminary) *(continued)*[24, 30, 31]

Port Pin	Active Mapping															
	HCon#8 [28]	HCon#9	HCon#10	HCon#11	HCon#16	HCon#17	HCon#18	HCon#19	HCon#20	HCon#21	HCon#22	HCon#23	HCon#24	HCon#25	HCon#26	HCon#27
	ACT #0[29]	ACT #1	ACT #2	ACT #3	ACT #4	ACT #5	ACT #6	ACT #7	ACT #8	ACT #9	ACT #10	ACT #11	ACT #12	ACT #13	ACT #14	ACT #15
P14.5	PWM_53	PWM_52_N	TC_53_TR0	TC_52_TR1	TC_H_4_TR1	SCB2_SEL2(0)	–	–	–	–	–	–	–	AUDIOSS2_TX_SDO	–	–
P14.6	PWM_54	PWM_53_N	TC_54_TR0	TC_53_TR1	TC_H_5_TR0	–	–	–	–	–	–	–	–	–	TRIG_IN[24]	–
P14.7	PWM_55	PWM_54_N	TC_55_TR0	TC_54_TR1	TC_H_5_TR1	–	–	–	–	–	–	–	–	–	TRIG_IN[25]	–
P15.0	PWM_56	PWM_55_N	TC_56_TR0	TC_55_TR1	TC_H_6_TR0	SCB9_RX(0)		SCB9_MISO(0)	–	CAN1_3_TX	–	–	–	AUDIOSS2_-CLK_I2S_IF	–	–
P15.1	PWM_57	PWM_56_N	TC_57_TR0	TC_56_TR1	TC_H_6_TR1	SCB9_TX(0)	SCB9_SDA(0)	SCB9_MOSI(0)	–	CAN1_3_RX	–	–	–	AUDIOSS2_RX_SCK	–	–
P15.2	PWM_58	PWM_57_N	TC_58_TR0	TC_57_TR1	TC_H_7_TR0	SCB9_RTS(0)	SCB9_SCL(0)	SCB9_CLK(0)	–	–	–	–	–	AUDIOSS2_RX_WS	–	–
P15.3	PWM_59	PWM_58_N	TC_59_TR0	TC_58_TR1	TC_H_7_TR1	SCB9_CTS(0)		SCB9_SEL0(0)	–	–	–	–	–	AUDIOSS2_RX_SDI	–	–
P16.0	PWM_60	PWM_59_N	TC_60_TR0	TC_59_TR1	PWM_H_0	–	–	SCB9_SEL1(0)	–	–	–	–	–	–	–	–
P16.1	PWM_61	PWM_60_N	TC_61_TR0	TC_60_TR1	PWM_H_0_N	–	–	SCB9_SEL2(0)	–	–	–	–	–	–	–	–
P16.2	PWM_62	PWM_61_N	TC_62_TR0	TC_61_TR1	PWM_H_1	–	–	SCB9_SEL3(0)	–	–	–	–	–	–	–	–
P16.3	PWM_62	PWM_62_N	TC_62_TR0	TC_62_TR1	PWM_H_1_N	–	–	–	–	–	–	–	–	–	–	–
P16.4	–	–	–	–	–	–	–	–	–	–	–	–	–	–	–	–
P16.5	–	–	–	–	–	–	–	–	–	–	–	–	–	–	–	–
P16.6	–	–	–	–	–	–	–	–	–	–	–	–	–	–	–	–
P16.7	–	–	–	–	–	–	–	–	–	–	–	–	–	–	–	–
P17.0	PWM_61	PWM_62_N	TC_61_TR0	TC_62_TR1	–	–	–	–	–	CAN1_1_TX	–	–	–	–	–	–
P17.1	PWM_60	PWM_61_N	TC_60_TR0	TC_61_TR1	–	SCB3_RX(1)	–	–	–	CAN1_1_RX	–	–	–	–	–	–
P17.2	PWM_59	PWM_60_N	TC_59_TR0	TC_60_TR1	–	SCB3_TX(1)	SCB3_SDA(1)	–	–		–	–	–	–	–	–
P17.3	PWM_58	PWM_59_N	TC_58_TR0	TC_59_TR1	PWM_H_3	SCB3_RTS(1)	SCB3_SCL(1)	–	–	SCB3_CLK(1)	–	–	–	–	TRIG_IN[26]	–
P17.4	PWM_57	PWM_58_N	TC_57_TR0	TC_58_TR1	PWM_H_3_N	SCB3_CTS(1)	–	–	–	SCB3_SEL0(1)	–	–	–	–	TRIG_IN[27]	–
P17.5	PWM_56	PWM_57_N	TC_56_TR0	TC_57_TR1	PWM_H_2	–	–	–	–	SCB3_SEL1(1)	–	–	–	–	–	–
P17.6	PWM_M_4	PWM_56_N	TC_M_4_TR0	TC_56_TR1	PWM_H_2_N	–	–	–	–	SCB3_SEL2(1)	–	–	–	–	–	–

Notes
28. Hi-Speed I/O matrix connection (HCon) reference as per **Table 14**.
29. Active Mode ordering (ACT #0, ACT #1, and so on) does not have any impact on configuring alternate functions; the HSIOM module handles the alternate function assignments.
30. See **Table 18** for more information on pin multiplexer abbreviations used.
31. For any function marked with an identifier (n), the AC timing is only guaranteed within the respective group "n".

Table 17 Alternate pin functions in Active Mode (Preliminary) *(continued)*[24, 30, 31]

Port Pin	Active Mapping															
	HCon#8 [28]	HCon#9	HCon#10	HCon#11	HCon#16	HCon#17	HCon#18	HCon#19	HCon#20	HCon#21	HCon#22	HCon#23	HCon#24	HCon#25	HCon#26	HCon#27
	ACT #0[29]	ACT #1	ACT #2	ACT #3	ACT #4	ACT #5	ACT #6	ACT #7	ACT #8	ACT #9	ACT #10	ACT #11	ACT #12	ACT #13	ACT #14	ACT #15
P17.7	PWM_M_5	PWM_M_4_N	TC_M_5_TR0	TC_M_4_TR1		–	–	–	–		–	–	–	–	–	–
P18.0	PWM_M_6	PWM_M_5_N	TC_M_6_TR0	TC_M_5_TR1	PWM_H_0	SCB1_RX(0)		SCB1_MISO(0)	–	–	–	–	ETH0_REF_CLK(0)	–	–	FAULT_OUT_0
P18.1	PWM_M_7	PWM_M_6_N	TC_M_7_TR0	TC_M_6_TR1	PWM_H_0_N	SCB1_TX(0)	SCB1_SDA(0)	SCB1_MOSI(0)		SCB3_MISO(1)	–	–	ETH0_TX_CTL(0)	–	–	FAULT_OUT_1
P18.2	PWM_55	PWM_M_7_N	TC_55_TR0	TC_M_7_TR1	PWM_H_1	SCB1_RTS(0)	SCB1_SCL(0)	SCB1_CLK(0)	–	SCB3_MOSI(1)	–	–	ETH0_TX_ER(0)	–	–	–
P18.3	PWM_54	PWM_55_N	TC_54_TR0	TC_55_TR1	PWM_H_1_N	SCB1_CTS(0)	–	SCB1_SEL0(0)	–	SCB3_CLK(2)	–	–	ETH0_TX_CLK(0)	–	–	TRACE_-CLOCK(0)
P18.4	PWM_53	PWM_54_N	TC_53_TR0	TC_54_TR1	PWM_H_2	–	–	SCB1_SEL1(0)	–	SCB3_SEL0(2)	–	–	ETH0_TXD_0(0)	–	–	TRACE_-DATA_0(0)
P18.5	PWM_52	PWM_53_N	TC_52_TR0	TC_53_TR1	PWM_H_2_N	–	–	SCB1_SEL2(0)	–	–	–	–	ETH0_TXD_1(0)	–	–	TRACE_-DATA_1(0)
P18.6	PWM_51	PWM_52_N	TC_51_TR0	TC_52_TR1	PWM_H_3	–	–	SCB1_SEL3(0)	–	CAN1_2_TX	–	–	ETH0_TXD_2(0)	–	–	TRACE_-DATA_2(0)
P18.7	PWM_50	PWM_51_N	TC_50_TR0	TC_51_TR1	PWM_H_3_N	–	–	–	–	CAN1_2_RX	–	–	ETH0_TXD_3(0)	–	–	TRACE_-DATA_3(0)
P19.0	PWM_M_3	PWM_50_N	TC_M_3_TR0	TC_50_TR1	TC_H_0_TR0	SCB2_MISO(1)	–	SCB2_RX(1)	–	CAN1_3_TX	–	–	ETH0_RXD_0(0)	–	–	FAULT_OUT_2(0)
P19.1	PWM_26	PWM_M_3_N	TC_26_TR0	TC_M_3_TR1	TC_H_0_TR1	SCB2_MOSI(1)	SCB2_SDA(1)	SCB2_TX(1)	–	CAN1_3_RX	–	–	ETH0_RXD_1(0)	–	–	FAULT_OUT_3(0)
P19.2	PWM_27	PWM_26_N	TC_27_TR0	TC_26_TR1	TC_H_1_TR0	SCB2_CLK(1)	SCB2_SCL(1)	SCB2_RTS(1)	–	–	–	–	ETH0_RXD_2(0)	–	TRIG_IN[28]	–
P19.3	PWM_28	PWM_27_N	TC_28_TR0	TC_27_TR1	TC_H_1_TR1	SCB2_SEL0(1)	–	SCB2_CTS(1)	–	–	–	–	ETH0_RXD_3(0)	–	TRIG_IN[29]	–
P19.4	PWM_29	PWM_28_N	TC_29_TR0	TC_28_TR1	TC_H_2_TR0	SCB2_SEL1(1)	–	–	–	–	–	–	–	–	–	–
P20.0	PWM_30	PWM_29_N	TC_30_TR0	TC_29_TR1	TC_H_2_TR1	SCB2_SEL2(1)	–	–	–	–	–	–	–	–	–	–
P20.1	PWM_49	PWM_30_N	TC_49_TR0	TC_30_TR1	TC_H_3_TR0	–	–	–	–	–	–	–	–	–	–	–
P20.2	PWM_48	PWM_49_N	TC_48_TR0	TC_49_TR1	TC_H_3_TR1	–	–	–	–	–	–	–	–	–	–	–
P20.3	PWM_47	PWM_48_N	TC_47_TR0	TC_48_TR1	–	SCB1_RX(1)	–	SCB1_MISO(1)	–	CAN1_2_TX	–	–	–	–	–	–
P20.4	PWM_46	PWM_47_N	TC_46_TR0	TC_47_TR1	–	SCB1_TX(1)	SCB1_SDA(1)	SCB1_MOSI(1)	–	CAN1_2_RX	–	–	–	–	–	–
P20.5	PWM_45	PWM_46_N	TC_45_TR0	TC_46_TR1	–	SCB1_RTS(1)	SCB1_SCL(1)	SCB1_CLK(1)	–	–	–	–	–	–	–	–
P20.6	PWM_44	PWM_45_N	TC_44_TR0	TC_45_TR1	–	SCB1_CTS(1)	–	SCB1_SEL0(1)	–	–	–	–	–	–	–	–

Notes
28. Hi-Speed I/O matrix connection (HCon) reference as per **Table 14**.
29. Active Mode ordering (ACT #0, ACT #1, and so on) does not have any impact on configuring alternate functions; the HSIOM module handles the alternate function assignments.
30. See **Table 18** for more information on pin multiplexer abbreviations used.
31. For any function marked with an identifier (n), the AC timing is only guaranteed within the respective group "n".

Table 17 Alternate pin functions in Active Mode (Preliminary) *(continued)*[24, 30, 31]

Port Pin	Active Mapping															
	HCon#8 [28]	HCon#9	HCon#10	HCon#11	HCon#16	HCon#17	HCon#18	HCon#19	HCon#20	HCon#21	HCon#22	HCon#23	HCon#24	HCon#25	HCon#26	HCon#27
	ACT #0[29]	ACT #1	ACT #2	ACT #3	ACT #4	ACT #5	ACT #6	ACT #7	ACT #8	ACT #9	ACT #10	ACT #11	ACT #12	ACT #13	ACT #14	ACT #15
P20.7	PWM_43	PWM_44_N	TC_43_TR0	TC_44_TR1	–	–	–	SCB1_SEL1(1)	–	–	–	–	–	–	–	–
P21.0	PWM_42	PWM_43_N	TC_42_TR0	TC_43_TR1	–	–	–	SCB1_SEL2(1)	–	–	–	–	–	–	–	–
P21.1	PWM_41	PWM_42_N	TC_41_TR0	TC_42_TR1	–	–	–	–	–	–	–	–	–	–	–	–
P21.2	PWM_40	PWM_41_N	TC_40_TR0	TC_41_TR1	–	–	–	–	–	–	EXT_CLK	–	–	–	–	TRIG_DBG[1]
P21.3	PWM_39	PWM_40_N	TC_39_TR0	TC_40_TR1	–	–	–	–	–	–	–	–	–	–	–	–
P21.4	PWM_38	PWM_39_N	TC_38_TR0	TC_39_TR1	–	–	–	–	–	–	–	–	–	–	–	–
P21.5	PWM_37	PWM_38_N	TC_37_TR0	TC_38_TR1	–	–	–	–	–	CAN1_1_TX	PWM_34	PWM_35_N	ETH0_RX_CTL(0)	–	–	TRACE_-DATA_0(!)
P21.6	PWM_36	PWM_37_N	TC_36_TR0	TC_37_TR1	–	–	–	–	–	–	–	–	–	–	–	–
P21.7	PWM_35	PWM_36_N	TC_35_TR0	TC_36_TR1	–	SCB6_RX(1)	–	SCB6_MISO(1)	–	–	–	–	–	–	–	CAL_SUP_NZ
P22.1	PWM_33	PWM_34_N	TC_33_TR0	TC_34_TR1	–	SCB6_TX(1)	SCB6_SDA(1)	SCB6_MOSI(1)	–	CAN1_1_RX	–	–	–	–	–	TRACE_-DATA_1(1)
P22.2	PWM_32	PWM_33_N	TC_32_TR0	TC_33_TR1	–	SCB6_RTS(1)	SCB6_SCL(1)	SCB6_CLK(1)	–	–	–	–	–	–	–	TRACE_-DATA_2(1)
P22.3	PWM_31	PWM_32_N	TC_31_TR0	TC_32_TR1	–	SCB6_CTS(1)		SCB6_SEL0(1)	–	–	–	–	–	–	–	TRACE_-DATA_3(1)
P22.4	PWM_30	PWM_31_N	TC_30_TR0	TC_31_TR1	–	–	–	SCB6_SEL1(1)	–	–	–	–	–	–	–	TRACE_-CLOCK(1)
P22.5	PWM_29	PWM_30_N	TC_29_TR0	TC_30_TR1	–	–	–	SCB6_SEL2	–	–	–	–	–	–	–	–
P22.6	PWM_28	PWM_29_N	TC_28_TR0	TC_29_TR1	–	–	–		–	–	–	–	–	–	–	–
P22.7	PWM_27	PWM_28_N	TC_27_TR0	TC_28_TR1	–	–	–	–	–	–	–	–	–	–	–	–
P23.0	PWM_M_8	PWM_27_N	TC_M_8_TR0	TC_27_TR1	–	SCB7_RX(1)		SCB7_MISO(1)	–	CAN1_0_TX	–	–	–	–	–	FAULT_OUT_0
P23.1	PWM_M_9	PWM_M_8_N	TC_M_9_TR0	TC_M_8_TR1	–	SCB7_TX(1)	SCB7_SDA(1)	SCB7_MOSI(1)	–	CAN1_0_RX	–	–	–	–	–	FAULT_OUT_1
P23.2	PWM_M_10	PWM_M_9_N	TC_M_10_TR0	TC_M_9_TR1	–	SCB7_RTS(1)	SCB7_SCL(1)	SCB7_CLK(1)	–	–	–	–	–	–	–	FAULT_OUT_2
P23.3	PWM_M_11	PWM_M_10_N	TC_M_11_TR0	TC_M_10_TR1	–	SCB7_CTS(1)	–	SCB7_SEL0(1)	–	–	–	–	ETH0_RX_CLK(0)	–	TRIG_IN[30]	FAULT_OUT_3
P23.4	PWM_25	PWM_M_11_N	TC_25_TR0	TC_M_11_TR1	–	SCB2_MISO(2)	–	SCB7_SEL1(1)	–	–	–	–	–	–	TRIG_IN[31]	TRIG_DBG[0]

Notes
28. Hi-Speed I/O matrix connection (HCon) reference as per **Table 14**.
29. Active Mode ordering (ACT #0, ACT #1, and so on) does not have any impact on configuring alternate functions; the HSIOM module handles the alternate function assignments.
30. See **Table 18** for more information on pin multiplexer abbreviations used.
31. For any function marked with an identifier (n), the AC timing is only guaranteed within the respective group "n".

Table 17 Alternate pin functions in Active Mode (Preliminary) *(continued)*[24, 30, 31]

Port Pin	Active Mapping															
	HCon#8 [28]	HCon#9	HCon#10	HCon#11	HCon#16	HCon#17	HCon#18	HCon#19	HCon#20	HCon#21	HCon#22	HCon#23	HCon#24	HCon#25	HCon#26	HCon#27
	ACT #0[29]	ACT #1	ACT #2	ACT #3	ACT #4	ACT #5	ACT #6	ACT #7	ACT #8	ACT #9	ACT #10	ACT #11	ACT #12	ACT #13	ACT #14	ACT #15
P23.5	PWM_24	PWM_25_N	TC_24_TR0	TC_25_TR1	–	SCB2_MOSI(2)	–	SCB7_SEL2	–	–	–	–	–	–	–	–
P23.6	PWM_23	PWM_24_N	TC_23_TR0	TC_24_TR1	–	SCB2_CLK(2)	–	–	–	–	–	–	–	–	–	–
P23.7	PWM_22	PWM_23_N	TC_22_TR0	TC_23_TR1	–	SCB2_SEL0(2)	–	–	–	–	EXT_CLK	–	–	–	–	CAL_SUP_NZ
P24.0	–	–	–	–	–	–	–	–	–	–	EXT_CLK	–	–	SDHC_CARD_DETECT_N(1)	–	–
P24.1	–	–	–	–	–	–	–	–	–	–	–	SPIHB_CLK(1)	–	SDHC_CARD_MECH_WRITE_PROT(1)	–	–
P24.2	–	–	–	–	–	–	–	–	–	–	–	SPIHB_RWDS(1)	–	SDHC_CLK_CARD(1)	–	–
P24.3	–	–	–	–	–	–	–	–	–	–	–	SPIHB_SEL0(1)	–	SDHC_CARD_CMD(1)	–	–
P24.4	–	–	–	–	–	–	–	–	–	–	–	SPIHB_SEL1(1)	–	SDHC_CARD_IF_PWR_EN(1)	–	–
P25.0	–	–	–	–	–	–	–	–	–	–	–	SPIHB_DATA0(1)	–	SDHC_CARD_DAT_3TO0_0(1)	–	–
P25.1	–	–	–	–	–	–	–	–	–	–	–	SPIHB_DATA1(1)	–	SDHC_CARD_DAT_3TO0_1(1)	–	–
P25.2	–	–	–	–	–	–	–	–	–	–	–	SPIHB_DATA2(1)	–	SDHC_CARD_DAT_3TO0_2(1)	–	–
P25.3	–	–	–	–	–	–	–	–	–	–	–	SPIHB_DATA3(1)	–	SDHC_CARD_DAT_3TO0_3(1)	–	–
P25.4	–	–	–	–	–	–	–	–	–	–	–	SPIHB_DATA4(1)	–	SDHC_CARD_DAT_7TO4_0(1)	–	–
P25.5	–	–	–	–	–	–	–	–	–	–	–	SPIHB_DATA5(1)	–	SDHC_CARD_DAT_7TO4_1(1)	–	–

Notes
28. Hi-Speed I/O matrix connection (HCon) reference as per **Table 14**.
29. Active Mode ordering (ACT #0, ACT #1, and so on) does not have any impact on configuring alternate functions; the HSIOM module handles the alternate function assignments.
30. See **Table 18** for more information on pin multiplexer abbreviations used.
31. For any function marked with an identifier (n), the AC timing is only guaranteed within the respective group "n".

Table 17 Alternate pin functions in Active Mode (Preliminary) *(continued)*[24, 30, 31]

Port Pin	Active Mapping															
	HCon#8 [28]	HCon#9	HCon#10	HCon#11	HCon#16	HCon#17	HCon#18	HCon#19	HCon#20	HCon#21	HCon#22	HCon#23	HCon#24	HCon#25	HCon#26	HCon#27
	ACT #0[29]	ACT #1	ACT #2	ACT #3	ACT #4	ACT #5	ACT #6	ACT #7	ACT #8	ACT #9	ACT #10	ACT #11	ACT #12	ACT #13	ACT #14	ACT #15
P25.6	–	–	–	–	–	–	–	–	–	–	–	SPIHB_-DATA6(1)	–	SDHC_-CARD_-DAT_7-TO4_2(1)	–	–
P25.7	–	–	–	–	–	–	–	–	–	–	–	SPIHB_-DATA7(1)	–	SDHC_-CARD_-DAT_7-TO4_3(1)	–	–
P26.0	–	–	–	–	–	–	–	–	–	–	–		–		–	–
P26.1	–	–	–	–	–	–	–	–	–	–	–	–	–	–	–	–
P26.2	–	–	–	–	–	–	–	–	–	–	–	–	–	–	–	–
P26.3	–	–	–	–	–	–	–	–	–	–	–	–	–	–	–	–
P26.4	–	–	–	–	–	–	–	–	–	–	–	–	–	–	–	–
P26.5	–	–	–	–	–	–	–	–	–	–	–	–	–	–	–	–
P26.6	–	–	–	–	–	–	–	–	–	–	–	–	–	–	–	–
P26.7	–	–	–	–	–	–	–	–	–	–	–	–	–	–	–	–
P27.0	–	–	–	–	–	–	–	–	–	–	–	–	–	–	–	–
P27.1	–	–	–	–	–	–	–	–	–	–	–	–	–	–	–	–
P27.2	–	–	–	–	–	–	–	–	–	–	–	–	–	–	–	–
P27.3	–	–	–	–	–	–	–	–	–	–	–	–	–	–	–	–
P27.4	–	–	–	–	–	–	–	–	–	–	–	–	–	–	–	–
P27.5	–	–	–	–	–	–	–	–	–	–	–	–	–	–	–	–
P27.6	–	–	–	–	–	–	–	–	–	–	–	–	–	–	–	–
P27.7	–	–	–	–	–	–	–	–	–	–	–	–	–	–	–	–
P28.0	–	–	–	–	–	SCB10_RX(0)	–	SCB10_MISO(0)	–	–	–	–	–	–	–	–
P28.1	–	–	–	–	–	SCB10_TX(0)	SCB10_SDA(0)	SCB10_MOSI(0)	–	–	–	–	–	–	–	–
P28.2	–	–	–	–	–	SCB10_RTS(0)	SCB10_SCL(0)	SCB10_CLK(0)	–	–	–	–	–	–	–	–
P28.3	–	–	–	–	–	SCB10_CTS(0)	–	SCB10_SEL0(0)	–	–	–	–	–	–	–	–
P28.4	–	–	–	–	–	–	–	SCB10_SEL1(0)	–	–	–	–	–	–	–	–

Notes
28. Hi-Speed I/O matrix connection (HCon) reference as per **Table 14**.
29. Active Mode ordering (ACT #0, ACT #1, and so on) does not have any impact on configuring alternate functions; the HSIOM module handles the alternate function assignments.
30. See **Table 18** for more information on pin multiplexer abbreviations used.
31. For any function marked with an identifier (n), the AC timing is only guaranteed within the respective group "n".

Table 17 Alternate pin functions in Active Mode (Preliminary) *(continued)*[24, 30, 31]

Port Pin	Active Mapping															
	HCon#8 [28]	HCon#9	HCon#10	HCon#11	HCon#16	HCon#17	HCon#18	HCon#19	HCon#20	HCon#21	HCon#22	HCon#23	HCon#24	HCon#25	HCon#26	HCon#27
	ACT #0[29]	ACT #1	ACT #2	ACT #3	ACT #4	ACT #5	ACT #6	ACT #7	ACT #8	ACT #9	ACT #10	ACT #11	ACT #12	ACT #13	ACT #14	ACT #15
P28.5	–	–	–	–	–	–	–	SCB10_SEL2(0)	–	–	–	–	–	–	–	–
P28.6	–	–	–	–	–	–	–	SCB10_SEL3(0)	–	–	–	–	–	–	–	–
P28.7	–	–	–	–	–	–	–	–	–	–	–	–	–	–	–	–
P29.0	–	–	–	–	–	–	–	–	–	–	–	–	–	–	–	–
P29.1	–	–	–	–	–	–	–	–	–	–	–	–	–	–	–	–
P29.2	–	–	–	–	–	–	–	–	–	–	–	–	–	–	–	–
P29.3	–	–	–	–	–	–	–	–	–	–	–	–	–	–	–	–
P29.4	–	–	–	–	–	–	–	–	–	–	–	–	–	–	–	–
P29.5	–	–	–	–	–	–	–	–	–	–	–	–	–	–	–	–
P29.6	–	–	–	–	–	–	–	–	–	–	–	–	–	–	–	–
P29.7	–	–	–	–	–	–	–	–	–	–	–	–	–	–	–	–
P30.0	–	–	–	–	–	SCB9_RTS(1)	–	SCB9_CLK(1)	–	–	–	–	–	–	–	–
P30.1	–	–	–	–	–	SCB9_CTS(1)	–	SCB9_SEL0(1)	–	–	–	–	–	–	–	–
P30.2	–	–	–	–	–	–	–	SCB9_SEL1(1)	–	CAN1_3_TX	–	–	–	–	–	–
P30.3	–	–	–	–	–	–	–	SCB9_SEL2(1)	–	CAN1_3_RX	–	–	–	–	–	–
P31.0	–	–	–	–	–	–	–	–	–	–	–	–	–	–	–	–
P31.1	–	–	–	–	–	–	–	–	–	–	–	–	–	–	–	–
P31.2	–	–	–	–	–	–	–	–	–	–	–	–	–	–	–	–
P32.0	–	–	–	–	–	SCB10_RX(1)		SCB10_MISO(1)	–	–	–	–	–	–	–	–
P32.1	–	–	–	–	–	SCB10_TX(1)	SCB10_SDA(1)	SCB10_MOSI(1)	–	–	–	–	–	–	–	–
P32.2	–	–	–	–	–	SCB10_RTS(1)	SCB10_SCL(1)	SCB10_CLK(1)	–	–	–	–	–	–	–	–
P32.3	–	–	–	–	–	SCB10_CTS(1)	–	SCB10_SEL0(1)	–	–	–	–	–	–	–	–
P32.4	–	–	–	–	–	–	–	SCB10_SEL1(1)	–	–	–	–	–	–	–	–

Notes
28. Hi-Speed I/O matrix connection (HCon) reference as per **Table 14**.
29. Active Mode ordering (ACT #0, ACT #1, and so on) does not have any impact on configuring alternate functions; the HSIOM module handles the alternate function assignments.
30. See **Table 18** for more information on pin multiplexer abbreviations used.
31. For any function marked with an identifier (n), the AC timing is only guaranteed within the respective group "n".

Table 17 Alternate pin functions in Active Mode (Preliminary) *(continued)*[24, 30, 31]

Port Pin	Active Mapping															
	HCon#8[28]	HCon#9	HCon#10	HCon#11	HCon#16	HCon#17	HCon#18	HCon#19	HCon#20	HCon#21	HCon#22	HCon#23	HCon#24	HCon#25	HCon#26	HCon#27
	ACT #0[29]	ACT #1	ACT #2	ACT #3	ACT #4	ACT #5	ACT #6	ACT #7	ACT #8	ACT #9	ACT #10	ACT #11	ACT #12	ACT #13	ACT #14	ACT #15
P32.5	–	–	–	–	–	–	–	SCB10_SEL2(1)	–	–	–	–	–	–	–	–
P32.6	–	–	–	–	–	–	–	SCB10_SEL3(1)	–	–	–	–	–	–	–	–
P32.7	–	–	–	–	–	–	–		–	–	–	–	–	–	–	–

Notes
28. Hi-Speed I/O matrix connection (HCon) reference as per **Table 14**.
29. Active Mode ordering (ACT #0, ACT #1, and so on) does not have any impact on configuring alternate functions; the HSIOM module handles the alternate function assignments.
30. See **Table 18** for more information on pin multiplexer abbreviations used.
31. For any function marked with an identifier (n), the AC timing is only guaranteed within the respective group "n".

13.1 Pin function description

Table 18 Pin function description

Sl. No.	Pin	Module	Description
1	PWMx_y	TCPWM	TCPWM 16-bit PWM (no motor control), PWM_DT and PWM_PR line out, x-TCPWM block, y-counter number
2	PWMx_y_N	TCPWM	TCPWM 16-bit PWM (no motor control), PWM_DT and PWM_PR complementary line out (N), x-TCPWM block, y-counter number
3	PWMx_M_y	TCPWM	TCPWM 16-bit PWM with motor control line out, x-TCPWM block, y-counter number
4	PWMx_M_y_N	TCPWM	TCPWM 16-bit PWM with motor control complementary line out (N), x-TCPWM block, y-counter number
5	PWMx_H_y	TCPWM	TCPWM 32-bit PWM, PWM_DT and PWM_PR line out, x-TCPWM block, y-counter number
6	PWMx_H_y_N	TCPWM	TCPWM 32-bit PWM, PWM_DT and PWM_PR complementary line out (N), x-TCPWM block, y-counter number
7	TCx_y_TRz	TCPWM	TCPWM 16-bit dedicated counter input triggers, x-TCPWM block, y-counter number, z-trigger number
8	TCx_M_y_TRz	TCPWM	TCPWM 16-bit dedicated counter input triggers with motor control, x-TCPWM block, y-counter number, z-trigger number
9	TCx_H_y_TRz	TCPWM	TCPWM 32-bit dedicated counter input triggers, x-TCPWM block, y-counter number, z-trigger number
10	SCBx_RX	SCB	UART Receive, x-SCB block
11	SCBx_TX	SCB	UART Transmit, x-SCB block
12	SCBx_RTS	SCB	UART Request to Send (Handshake), x-SCB block
13	SCBx_CTS	SCB	UART Clear to Send (Handshake), x-SCB block
14	SCBx_SDA	SCB	I2C Data line, x-SCB block
15	SCBx_SCL	SCB	I2C Clock line, x-SCB block
16	SCBx_MISO	SCB	SPI Master Input Slave Output, x-SCB block
17	SCBx_MOSI	SCB	SPI Master Output Slave Input, x-SCB block
18	SCBx_CLK	SCB	SPI Serial Clock, x-SCB block
19	SCBx_SELy	SCB	SPI Slave Select, x-SCB block, y-select line
23	CANx_y_TX	CANFD	CAN Transmit line, x-CAN block, y-channel number
24	CANx_y_RX	CANFD	CAN Receive line, x-CAN block, y-channel number
25	SPIHB_CLK	SMIF	SMIF interface clock
26	SPIHB_RWDS	SMIF	SMIF (SPI/HYPERBUS™) read-write-data-strobe line
27	SPIHB_SELx	SMIF	SMIF (SPI/HYPERBUS™) memory select line, x-select line number
28	SPIHB_DATAx	SMIF	SMIF (SPI/HYPERBUS™) memory data read and write line, x-0 to 7 data lines
29	ETHx_RX_ER	Ethernet	Ethernet receive error indication line, x-ETH module number
30	ETHx_ETH_TSU_TIMER_C-MP_VAL	Ethernet	Ethernet time stamp unit timer compare indication line, x-ETH module number
31	ETHx_MDIO	Ethernet	Ethernet management data input/output (MDIO) interface to PHY, x-ETH module number
32	ETHx_MDC	Ethernet	Ethernet management data clock (MDC) line, x-ETH module number
33	ETHx_REF_CLK	Ethernet	Ethernet reference clock line, x-ETH module number
34	ETHx_TX_CTL	Ethernet	Ethernet transmit control line, x-ETH module number
35	ETHx_TX_ER	Ethernet	Ethernet transmit error indication line, x-ETH module number
36	ETHx_TX_CLK	Ethernet	Ethernet transmit clock line, x-ETH module number

Table 18 Pin function description *(continued)*

Sl. No.	Pin	Module	Description
37	ETHx_TXD_y	Ethernet	Ethernet transmit data line, x-ETH module number, y-transmit channel number
38	ETHx_RXD_y	Ethernet	Ethernet receive data line, x-ETH module number, y-receive channel number
39	ETHx_RX_CTL	Ethernet	Ethernet receive control line, x-ETH module number
40	ETHx_RX_CLK	Ethernet	Ethernet receive clock line, x-ETH module number
41	SDHC_CARD_-MECH_WRITE_PROT	SDHC	SDHC mechanical write protect
42	SDHC_CARD_CMD	SDHC	SDHC command line
43	SDHC_CLK_CARD	SDHC	SDHC clock line
44	SDHC_CARD_DETECT_N	SDHC	SDHC interface insertion or removal detection line
45	SDHC_CARD_IF_PWR_EN	SDHC	SDHC interface power cycle line
46	SDHC_CARD_DAT_3TO0_x	SDHC	SDHC lower 4-bits of the data
47	SDHC_CARD_DAT_7TO4_x	SDHC	SDHC upper 4-bits of the data in 8-bit mode
48	AUDIOSSx_MCLK	AUDIOSS	AudioSS master clock out, x-AudioSS block
49	AUDIOSSx_TX_SCK	AUDIOSS	I^2S serial clock for transmitter, x-AudioSS block
50	AUDIOSSx_TX_WS	AUDIOSS	I^2S word select for transmitter, x-AudioSS block
51	AUDIOSSx_TX_SDO	AUDIOSS	I^2S serial data output for transmitter, x-AudioSS block
52	AUDIOSSx_CLK_I2S_IF	AUDIOSS	I^2S clock supplied from external I2S bus host, x-AudioSS block
53	AUDIOSSx_RX_SCK	AUDIOSS	I^2S serial clock for receiver, x-AudioSS block
54	AUDIOSSx_RX_WS	AUDIOSS	I^2S word select for receiver, x-AudioSS block
55	AUDIOSSx_RX_SDI	AUDIOSS	I^2S serial data input for receiver, x-AudioSS block
56	CAL_SUP_NZ	System	ETAS Calibration support line
57	FAULT_OUT_x	SRSS	Fault output line x-0 to 3
58	TRACE_DATA_x	SRSS	Trace dataout line x-0 to 3
59	TRACE_CLOCK	SRSS	Trace clock line
60	RTC_CAL	SRSS RTC	RTC calibration clock input
61	SWJ_TRSTN	SRSS	JTAG Test reset line (Active low)
62	SWJ_SWO_TDO	SRSS	JTAG Test data output/SWO (Serial Wire Output)
63	SWJ_SWCLK_TCLK	SRSS	JTAG Test clock/SWD clock (Serial Wire Clock)
64	SWJ_SWDIO_TMS	SRSS	JTAG Test mode select/SWD data (Serial Wire Data Input/Output)
65	SWJ_SWDOE_TDI	SRSS	JTAG Test data input
66	HIBERNATE_WAKEUP[x]	SRSS	Hibernate wakeup line x-0 to 1
67	EXT_CLK	SRSS	External clock input/output
68	EXT_PS_CTL0	SRSS REGHC	REGHC control line, Transistor mode/Positive terminal of the current sense resistor, PMIC mode/Power good input from PMIC
69	EXT_PS_CTL1	SRSS REGHC	REGHC control line, Transistor mode/Negative terminal of the current sense resistor, PMIC mode/Enable output for PMIC
70	EXT_PS_CTL2	SRSS REGHC	REGHC control line, Transistor mode/unused, PMIC mode/Reset threshold adjustment for some PMICs
71	ADC[x]_y	PASS SAR	SAR, channel, x-SAR number, y-channel number
72	ADC[x]_M	PASS SAR	SAR motor control input, x-SAR number
73	EXT_MUX[x]_y	PASS SAR	External SAR MUX inputs, x-MUX number, y-MUX input 0 to 2
74	EXT_MUX[x]_EN	PASS SAR	External SAR MUX enable line
75	TRIG_IN[x]	HSIOM	HSIOM_IO_INPUT[x] of trigger inputs, x-0 to 47

Table 18 Pin function description *(continued)*

Sl. No.	Pin	Module	Description
76	TRIG_DBG[x]	HSIOM	HSIOM_IO_OUTPUT[x] of trigger outputs, x-0 to 1
77	WCO_IN	SRSS	Watch crystal oscillator input
78	WCO_OUT	SRSS	Watch crystal oscillator output
79	ECO_IN	SRSS	External crystal oscillator input
80	ECO_OUT	SRSS	External crystal oscillator output

14 Interrupts and wake-up assignments

Table 19 Peripheral interrupt assignments and wake-up sources (Preliminary)

Interrupt	Source	Power Mode	Description
0	cpuss_interrupts_ipc_0_IRQn	Deep Sleep	CPUSS Inter Process Communication Interrupt #0
1	cpuss_interrupts_ipc_1_IRQn	Deep Sleep	CPUSS Inter Process Communication Interrupt #1
2	cpuss_interrupts_ipc_2_IRQn	Deep Sleep	CPUSS Inter Process Communication Interrupt #2
3	cpuss_interrupts_ipc_3_IRQn	Deep Sleep	CPUSS Inter Process Communication Interrupt #3
4	cpuss_interrupts_ipc_4_IRQn	Deep Sleep	CPUSS Inter Process Communication Interrupt #4
5	cpuss_interrupts_ipc_5_IRQn	Deep Sleep	CPUSS Inter Process Communication Interrupt #5
6	cpuss_interrupts_ipc_6_IRQn	Deep Sleep	CPUSS Inter Process Communication Interrupt #6
7	cpuss_interrupts_ipc_7_IRQn	Deep Sleep	CPUSS Inter Process Communication Interrupt #7
8	cpuss_interrupts_fault_0_IRQn	Deep Sleep	CPUSS Fault Structure #0 Interrupt
9	cpuss_interrupts_fault_1_IRQn	Deep Sleep	CPUSS Fault Structure #1 Interrupt
10	cpuss_interrupts_fault_2_IRQn	Deep Sleep	CPUSS Fault Structure #2 Interrupt
11	cpuss_interrupts_fault_3_IRQn	Deep Sleep	CPUSS Fault Structure #3 Interrupt
12	srss_interrupt_backup_IRQn	Deep Sleep	BACKUP domain Interrupt
13	srss_interrupt_mcwdt_0_IRQn	Deep Sleep	Multi Counter Watchdog Timer #0 interrupt
14	srss_interrupt_mcwdt_1_IRQn	Deep Sleep	Multi Counter Watchdog Timer #1 interrupt
15	srss_interrupt_mcwdt_2_IRQn	Deep Sleep	Multi Counter Watchdog Timer #2 interrupt
16	srss_interrupt_wdt_IRQn	Deep Sleep	Hardware Watchdog Timer interrupt
17	srss_interrupt_IRQn	Deep Sleep	Other combined Interrupts for SRSS (LVD, CLKCAL)
18	scb_0_interrupt_IRQn	Deep Sleep	SCB0 interrupt (Deep Sleep capable)
19	evtgen_0_interrupt_dpslp_IRQn	Deep Sleep	Event gen Deep Sleep domain interrupt
20	ioss_interrupt_vdd_IRQn	Deep Sleep	I/O Supply (V_{DDIO}, V_{DDA}, V_{DDD}) state change Interrupt
21	ioss_interrupt_gpio_dpslp_IRQn	Deep Sleep	Consolidated Interrupt for GPIO_STD and GPIO_ENH, All Ports
22	ioss_interrupts_gpio_dpslp_0_IRQn	Deep Sleep	GPIO_ENH Port #0 Interrupt
23	ioss_interrupts_gpio_dpslp_1_IRQn	Deep Sleep	GPIO_STD Port #1 Interrupt
24	ioss_interrupts_gpio_dpslp_2_IRQn	Deep Sleep	GPIO_STD Port #2 Interrupt
25	ioss_interrupts_gpio_dpslp_3_IRQn	Deep Sleep	GPIO_STD Port #3 Interrupt
26	ioss_interrupts_gpio_dpslp_4_IRQn	Deep Sleep	GPIO_STD Port #4 Interrupt
27	ioss_interrupts_gpio_dpslp_5_IRQn	Deep Sleep	GPIO_STD Port #5 Interrupt
28	ioss_interrupts_gpio_dpslp_6_IRQn	Deep Sleep	GPIO_STD Port #6 Interrupt
29	ioss_interrupts_gpio_dpslp_7_IRQn	Deep Sleep	GPIO_STD Port #7 Interrupt
30	ioss_interrupts_gpio_dpslp_8_IRQn	Deep Sleep	GPIO_STD Port #8 Interrupt
31	ioss_interrupts_gpio_dpslp_9_IRQn	Deep Sleep	GPIO_STD Port #9 Interrupt
32	ioss_interrupts_gpio_dpslp_10_IRQn	Deep Sleep	GPIO_STD Port #10 Interrupt
33	ioss_interrupts_gpio_dpslp_11_IRQn	Deep Sleep	GPIO_STD Port #11 Interrupt
34	ioss_interrupts_gpio_dpslp_12_IRQn	Deep Sleep	GPIO_STD Port #12 Interrupt
35	ioss_interrupts_gpio_dpslp_13_IRQn	Deep Sleep	GPIO_STD Port #13 Interrupt
36	ioss_interrupts_gpio_dpslp_14_IRQn	Deep Sleep	GPIO_STD Port #14 Interrupt
37	ioss_interrupts_gpio_dpslp_15_IRQn	Deep Sleep	GPIO_STD Port #15 Interrupt
38	ioss_interrupts_gpio_dpslp_16_IRQn	Deep Sleep	GPIO_STD Port #16 Interrupt
39	ioss_interrupts_gpio_dpslp_17_IRQn	Deep Sleep	GPIO_STD Port #17 Interrupt

Table 19 Peripheral interrupt assignments and wake-up sources (Preliminary) *(continued)*

Interrupt	Source	Power Mode	Description
40	ioss_interrupts_gpio_dpslp_18_IRQn	Deep Sleep	GPIO_STD Port #18 Interrupt
41	ioss_interrupts_gpio_dpslp_19_IRQn	Deep Sleep	GPIO_STD Port #19 Interrupt
42	ioss_interrupts_gpio_dpslp_20_IRQn	Deep Sleep	GPIO_STD Port #20 Interrupt
43	ioss_interrupts_gpio_dpslp_21_IRQn	Deep Sleep	GPIO_STD Port #21 Interrupt
44	ioss_interrupts_gpio_dpslp_22_IRQn	Deep Sleep	GPIO_STD Port #22 Interrupt
45	ioss_interrupts_gpio_dpslp_23_IRQn	Deep Sleep	GPIO_STD Port #23 Interrupt
46	ioss_interrupts_gpio_dpslp_28_IRQn	Deep Sleep	GPIO_STD Port #28 Interrupt
47	ioss_interrupts_gpio_dpslp_29_IRQn	Deep Sleep	GPIO_STD Port #29 Interrupt
48	ioss_interrupts_gpio_dpslp_30_IRQn	Deep Sleep	GPIO_STD Port #30 Interrupt
49	ioss_interrupts_gpio_dpslp_31_IRQn	Deep Sleep	GPIO_STD Port #31 Interrupt
50	ioss_interrupts_gpio_dpslp_32_IRQn	Deep Sleep	GPIO_STD Port #32 Interrupt
51	ioss_interrupts_gpio_act_IRQn	Active	Consolidated Interrupt for HSIO_STD, All ports
52	ioss_interrupts_gpio_act_24_IRQn	Active	HSIO_STD Port #24 Interrupt
53	ioss_interrupts_gpio_act_25_IRQn	Active	HSIO_STD Port #25 Interrupt
54	ioss_interrupts_gpio_act_26_IRQn	Active	HSIO_STD Port #26 Interrupt
55	ioss_interrupts_gpio_act_27_IRQn	Active	HSIO_STD Port #27 Interrupt
56	cpuss_interrupt_crypto_IRQn	Active	CRYPTO Accelerator Interrupt
57	cpuss_interrupt_fm_IRQn	Active	Flash Macro Interrupt
58	cpuss_interrupts_cm7_0_fp_IRQn	Active	CM7_0 Floating Point operation fault
59	cpuss_interrupts_cm7_1_fp_IRQn	Active	CM7_1 Floating Point operation fault
60	cpuss_interrupts_cm0_cti_0_IRQn	Active	CM0+ CTI (Cross Trigger Interface) #0
61	cpuss_interrupts_cm0_cti_1_IRQn	Active	CM0+ CTI #1
62	cpuss_interrupts_cm7_0_cti_0_IRQn	Active	CM7_0 CTI #0
63	cpuss_interrupts_cm7_0_cti_1_IRQn	Active	CM7_0 CTI #1
64	cpuss_interrupts_cm7_1_cti_0_IRQn	Active	CM7_1 CTI #0
65	cpuss_interrupts_cm7_1_cti_1_IRQn	Active	CM7_1 CTI #1
66	evtgen_0_interrupt_IRQn	Active	Event gen Active domain Interrupt
67	canfd_0_interrupt0_IRQn	Active	CAN0, Consolidated Interrupt #0 for all four channels
68	canfd_0_interrupt1_IRQn	Active	CAN0, Consolidated Interrupt #1 for all four channels
69	canfd_1_interrupt0_IRQn	Active	CAN1, Consolidated Interrupt #0 for all four channels
70	canfd_1_interrupt1_IRQn	Active	CAN1, Consolidated Interrupt #1 for all four channels
71	canfd_0_interrupts0_0_IRQn	Active	CAN0, Interrupt #0, Channel #0
72	canfd_0_interrupts0_1_IRQn	Active	CAN0, Interrupt #0, Channel #1
73	canfd_0_interrupts0_2_IRQn	Active	CAN0, Interrupt #0, Channel #2
74	canfd_0_interrupts0_3_IRQn	Active	CAN0, Interrupt #0, Channel #3
75	canfd_0_interrupts1_0_IRQn	Active	CAN0, Interrupt #1, Channel #0
76	canfd_0_interrupts1_1_IRQn	Active	CAN0, Interrupt #1, Channel #1
77	canfd_0_interrupts1_2_IRQn	Active	CAN0, Interrupt #1, Channel #2
78	canfd_0_interrupts1_3_IRQn	Active	CAN0, Interrupt #1, Channel #3
79	canfd_1_interrupts0_0_IRQn	Active	CAN1, Interrupt #0, Channel #0
80	canfd_1_interrupts0_1_IRQn	Active	CAN1, Interrupt #0, Channel #1

Table 19 Peripheral interrupt assignments and wake-up sources (Preliminary) *(continued)*

Interrupt	Source	Power Mode	Description
81	canfd_1_interrupts0_2_IRQn	Active	CAN1, Interrupt #0, Channel #2
82	canfd_1_interrupts0_3_IRQn	Active	CAN1, Interrupt #0, Channel #3
83	canfd_1_interrupts1_0_IRQn	Active	CAN1, Interrupt #1, Channel #0
84	canfd_1_interrupts1_1_IRQn	Active	CAN1, Interrupt #1, Channel #1
85	canfd_1_interrupts1_2_IRQn	Active	CAN1, Interrupt #1, Channel #2
86	canfd_1_interrupts1_3_IRQn	Active	CAN1, Interrupt #1, Channel #3
87 - 102	Reserved	Active	Reserved for future use
103	scb_1_interrupt_IRQn	Active	SCB1 Interrupt
104	scb_2_interrupt_IRQn	Active	SCB2 Interrupt
105	scb_3_interrupt_IRQn	Active	SCB3 Interrupt
106	scb_4_interrupt_IRQn	Active	SCB4 Interrupt
107	scb_5_interrupt_IRQn	Active	SCB5 Interrupt
108	scb_6_interrupt_IRQn	Active	SCB6 Interrupt
109	scb_7_interrupt_IRQn	Active	SCB7 Interrupt
110	scb_8_interrupt_IRQn	Active	SCB8 Interrupt
111	scb_9_interrupt_IRQn	Active	SCB9 Interrupt
112	scb_10_interrupt_IRQn	Active	SCB10 Interrupt
113	pass_0_interrupts_sar_0_IRQn	Active	SAR0, Logical Channel #0 Interrupt
114	pass_0_interrupts_sar_1_IRQn	Active	SAR0, Logical Channel #1 Interrupt
115	pass_0_interrupts_sar_2_IRQn	Active	SAR0, Logical Channel #2 Interrupt
116	pass_0_interrupts_sar_3_IRQn	Active	SAR0, Logical Channel #3 Interrupt
117	pass_0_interrupts_sar_4_IRQn	Active	SAR0, Logical Channel #4 Interrupt
118	pass_0_interrupts_sar_5_IRQn	Active	SAR0, Logical Channel #5 Interrupt
119	pass_0_interrupts_sar_6_IRQn	Active	SAR0, Logical Channel #6 Interrupt
120	pass_0_interrupts_sar_7_IRQn	Active	SAR0, Logical Channel #7 Interrupt
121	pass_0_interrupts_sar_8_IRQn	Active	SAR0, Logical Channel #8 Interrupt
122	pass_0_interrupts_sar_9_IRQn	Active	SAR0, Logical Channel #9 Interrupt
123	pass_0_interrupts_sar_10_IRQn	Active	SAR0, Logical Channel #10 Interrupt
124	pass_0_interrupts_sar_11_IRQn	Active	SAR0, Logical Channel #11 Interrupt
125	pass_0_interrupts_sar_12_IRQn	Active	SAR0, Logical Channel #12 Interrupt
126	pass_0_interrupts_sar_13_IRQn	Active	SAR0, Logical Channel #13 Interrupt
127	pass_0_interrupts_sar_14_IRQn	Active	SAR0, Logical Channel #14 Interrupt
128	pass_0_interrupts_sar_15_IRQn	Active	SAR0, Logical Channel #15 Interrupt
129	pass_0_interrupts_sar_16_IRQn	Active	SAR0, Logical Channel #16 Interrupt
130	pass_0_interrupts_sar_17_IRQn	Active	SAR0, Logical Channel #17 Interrupt
131	pass_0_interrupts_sar_18_IRQn	Active	SAR0, Logical Channel #18 Interrupt
132	pass_0_interrupts_sar_19_IRQn	Active	SAR0, Logical Channel #19 Interrupt
133	pass_0_interrupts_sar_20_IRQn	Active	SAR0, Logical Channel #20 Interrupt
134	pass_0_interrupts_sar_21_IRQn	Active	SAR0, Logical Channel #21 Interrupt
135	pass_0_interrupts_sar_22_IRQn	Active	SAR0, Logical Channel #22 Interrupt
136	pass_0_interrupts_sar_23_IRQn	Active	SAR0, Logical Channel #23 Interrupt
137	pass_0_interrupts_sar_24_IRQn	Active	SAR0, Logical Channel #24 Interrupt
138	pass_0_interrupts_sar_25_IRQn	Active	SAR0, Logical Channel #25 Interrupt
139	pass_0_interrupts_sar_26_IRQn	Active	SAR0, Logical Channel #26 Interrupt

Table 19 Peripheral interrupt assignments and wake-up sources (Preliminary) *(continued)*

Interrupt	Source	Power Mode	Description
140	pass_0_interrupts_sar_27_IRQn	Active	SAR0, Logical Channel #27 Interrupt
141	pass_0_interrupts_sar_28_IRQn	Active	SAR0, Logical Channel #28 Interrupt
142	pass_0_interrupts_sar_29_IRQn	Active	SAR0, Logical Channel #29 Interrupt
143	pass_0_interrupts_sar_30_IRQn	Active	SAR0, Logical Channel #30 Interrupt
144	pass_0_interrupts_sar_31_IRQn	Active	SAR0, Logical Channel #31 Interrupt
145	pass_0_interrupts_sar_32_IRQn	Active	SAR1, Logical Channel #0 Interrupt
146	pass_0_interrupts_sar_33_IRQn	Active	SAR1, Logical Channel #1 Interrupt
147	pass_0_interrupts_sar_34_IRQn	Active	SAR1, Logical Channel #2 Interrupt
148	pass_0_interrupts_sar_35_IRQn	Active	SAR1, Logical Channel #3 Interrupt
149	pass_0_interrupts_sar_36_IRQn	Active	SAR1, Logical Channel #4 Interrupt
150	pass_0_interrupts_sar_37_IRQn	Active	SAR1, Logical Channel #5 Interrupt
151	pass_0_interrupts_sar_38_IRQn	Active	SAR1, Logical Channel #6 Interrupt
152	pass_0_interrupts_sar_39_IRQn	Active	SAR1, Logical Channel #7 Interrupt
153	pass_0_interrupts_sar_40_IRQn	Active	SAR1, Logical Channel #8 Interrupt
154	pass_0_interrupts_sar_41_IRQn	Active	SAR1, Logical Channel #9 Interrupt
155	pass_0_interrupts_sar_42_IRQn	Active	SAR1, Logical Channel #10 Interrupt
156	pass_0_interrupts_sar_43_IRQn	Active	SAR1, Logical Channel #11 Interrupt
157	pass_0_interrupts_sar_44_IRQn	Active	SAR1, Logical Channel #12 Interrupt
158	pass_0_interrupts_sar_45_IRQn	Active	SAR1, Logical Channel #13 Interrupt
159	pass_0_interrupts_sar_46_IRQn	Active	SAR1, Logical Channel #14 Interrupt
160	pass_0_interrupts_sar_47_IRQn	Active	SAR1, Logical Channel #15 Interrupt
161	pass_0_interrupts_sar_48_IRQn	Active	SAR1, Logical Channel #16 Interrupt
162	pass_0_interrupts_sar_49_IRQn	Active	SAR1, Logical Channel #17 Interrupt
163	pass_0_interrupts_sar_50_IRQn	Active	SAR1, Logical Channel #18 Interrupt
164	pass_0_interrupts_sar_51_IRQn	Active	SAR1, Logical Channel #19 Interrupt
165	pass_0_interrupts_sar_52_IRQn	Active	SAR1, Logical Channel #20 Interrupt
166	pass_0_interrupts_sar_53_IRQn	Active	SAR1, Logical Channel #21 Interrupt
167	pass_0_interrupts_sar_54_IRQn	Active	SAR1, Logical Channel #22 Interrupt
168	pass_0_interrupts_sar_55_IRQn	Active	SAR1, Logical Channel #23 Interrupt
169	pass_0_interrupts_sar_56_IRQn	Active	SAR1, Logical Channel #24 Interrupt
170	pass_0_interrupts_sar_57_IRQn	Active	SAR1, Logical Channel #25 Interrupt
171	pass_0_interrupts_sar_58_IRQn	Active	SAR1, Logical Channel #26 Interrupt
172	pass_0_interrupts_sar_59_IRQn	Active	SAR1, Logical Channel #27 Interrupt
173	pass_0_interrupts_sar_60_IRQn	Active	SAR1, Logical Channel #28 Interrupt
174	pass_0_interrupts_sar_61_IRQn	Active	SAR1, Logical Channel #29 Interrupt
175	pass_0_interrupts_sar_62_IRQn	Active	SAR1, Logical Channel #30 Interrupt
176	pass_0_interrupts_sar_63_IRQn	Active	SAR1, Logical Channel #31 Interrupt
177	pass_0_interrupts_sar_64_IRQn	Active	SAR2, Logical Channel #0 Interrupt
178	pass_0_interrupts_sar_65_IRQn	Active	SAR2, Logical Channel #1 Interrupt
179	pass_0_interrupts_sar_66_IRQn	Active	SAR2, Logical Channel #2 Interrupt
180	pass_0_interrupts_sar_67_IRQn	Active	SAR2, Logical Channel #3 Interrupt
181	pass_0_interrupts_sar_68_IRQn	Active	SAR2, Logical Channel #4 Interrupt
182	pass_0_interrupts_sar_69_IRQn	Active	SAR2, Logical Channel #5 Interrupt
183	pass_0_interrupts_sar_70_IRQn	Active	SAR2, Logical Channel #6 Interrupt

Table 19 Peripheral interrupt assignments and wake-up sources (Preliminary) *(continued)*

Interrupt	Source	Power Mode	Description
184	pass_0_interrupts_sar_71_IRQn	Active	SAR2, Logical Channel #7 Interrupt
185	cpuss_interrupts_dmac_0_IRQn	Active	CPUSS M-DMA0, Channel #0 Interrupt
186	cpuss_interrupts_dmac_1_IRQn	Active	CPUSS M-DMA0, Channel #1 Interrupt
187	cpuss_interrupts_dmac_2_IRQn	Active	CPUSS M-DMA0, Channel #2 Interrupt
188	cpuss_interrupts_dmac_3_IRQn	Active	CPUSS M-DMA0, Channel #3 Interrupt
189	cpuss_interrupts_dmac_4_IRQn	Active	CPUSS M-DMA0, Channel #4 Interrupt
190	cpuss_interrupts_dmac_5_IRQn	Active	CPUSS M-DMA0, Channel #5 Interrupt
191	cpuss_interrupts_dmac_6_IRQn	Active	CPUSS M-DMA0, Channel #6 Interrupt
192	cpuss_interrupts_dmac_7_IRQn	Active	CPUSS M-DMA0, Channel #7 Interrupt
193	cpuss_interrupts_dw0_0_IRQn	Active	CPUSS P-DMA0, Channel #0 Interrupt
194	cpuss_interrupts_dw0_1_IRQn	Active	CPUSS P-DMA0, Channel #1 Interrupt
195	cpuss_interrupts_dw0_2_IRQn	Active	CPUSS P-DMA0, Channel #2 Interrupt
196	cpuss_interrupts_dw0_3_IRQn	Active	CPUSS P-DMA0, Channel #3 Interrupt
197	cpuss_interrupts_dw0_4_IRQn	Active	CPUSS P-DMA0, Channel #4 Interrupt
198	cpuss_interrupts_dw0_5_IRQn	Active	CPUSS P-DMA0, Channel #5 Interrupt
199	cpuss_interrupts_dw0_6_IRQn	Active	CPUSS P-DMA0, Channel #6 Interrupt
200	cpuss_interrupts_dw0_7_IRQn	Active	CPUSS P-DMA0, Channel #7 Interrupt
201	cpuss_interrupts_dw0_8_IRQn	Active	CPUSS P-DMA0, Channel #8 Interrupt
202	cpuss_interrupts_dw0_9_IRQn	Active	CPUSS P-DMA0, Channel #9 Interrupt
203	cpuss_interrupts_dw0_10_IRQn	Active	CPUSS P-DMA0, Channel #10 Interrupt
204	cpuss_interrupts_dw0_11_IRQn	Active	CPUSS P-DMA0, Channel #11 Interrupt
205	cpuss_interrupts_dw0_12_IRQn	Active	CPUSS P-DMA0, Channel #12 Interrupt
206	cpuss_interrupts_dw0_13_IRQn	Active	CPUSS P-DMA0, Channel #13 Interrupt
207	cpuss_interrupts_dw0_14_IRQn	Active	CPUSS P-DMA0, Channel #14 Interrupt
208	cpuss_interrupts_dw0_15_IRQn	Active	CPUSS P-DMA0, Channel #15 Interrupt
209	cpuss_interrupts_dw0_16_IRQn	Active	CPUSS P-DMA0, Channel #16 Interrupt
210	cpuss_interrupts_dw0_17_IRQn	Active	CPUSS P-DMA0, Channel #17 Interrupt
211	cpuss_interrupts_dw0_18_IRQn	Active	CPUSS P-DMA0, Channel #18 Interrupt
212	cpuss_interrupts_dw0_19_IRQn	Active	CPUSS P-DMA0, Channel #19 Interrupt
213	cpuss_interrupts_dw0_20_IRQn	Active	CPUSS P-DMA0, Channel #20 Interrupt
214	cpuss_interrupts_dw0_21_IRQn	Active	CPUSS P-DMA0, Channel #21 Interrupt
215	cpuss_interrupts_dw0_22_IRQn	Active	CPUSS P-DMA0, Channel #22 Interrupt
216	cpuss_interrupts_dw0_23_IRQn	Active	CPUSS P-DMA0, Channel #23 Interrupt
217	cpuss_interrupts_dw0_24_IRQn	Active	CPUSS P-DMA0, Channel #24 Interrupt
218	cpuss_interrupts_dw0_25_IRQn	Active	CPUSS P-DMA0, Channel #25 Interrupt
219	cpuss_interrupts_dw0_26_IRQn	Active	CPUSS P-DMA0, Channel #26 Interrupt
220	cpuss_interrupts_dw0_27_IRQn	Active	CPUSS P-DMA0, Channel #27 Interrupt
221	cpuss_interrupts_dw0_28_IRQn	Active	CPUSS P-DMA0, Channel #28 Interrupt
222	cpuss_interrupts_dw0_29_IRQn	Active	CPUSS P-DMA0, Channel #29 Interrupt
223	cpuss_interrupts_dw0_30_IRQn	Active	CPUSS P-DMA0, Channel #30 Interrupt
224	cpuss_interrupts_dw0_31_IRQn	Active	CPUSS P-DMA0, Channel #31 Interrupt
225	cpuss_interrupts_dw0_32_IRQn	Active	CPUSS P-DMA0, Channel #32 Interrupt
226	cpuss_interrupts_dw0_33_IRQn	Active	CPUSS P-DMA0, Channel #33 Interrupt
227	cpuss_interrupts_dw0_34_IRQn	Active	CPUSS P-DMA0, Channel #34 Interrupt

Table 19 Peripheral interrupt assignments and wake-up sources (Preliminary) *(continued)*

Interrupt	Source	Power Mode	Description
228	cpuss_interrupts_dw0_35_IRQn	Active	CPUSS P-DMA0, Channel #35 Interrupt
229	cpuss_interrupts_dw0_36_IRQn	Active	CPUSS P-DMA0, Channel #36 Interrupt
230	cpuss_interrupts_dw0_37_IRQn	Active	CPUSS P-DMA0, Channel #37 Interrupt
231	cpuss_interrupts_dw0_38_IRQn	Active	CPUSS P-DMA0, Channel #38 Interrupt
232	cpuss_interrupts_dw0_39_IRQn	Active	CPUSS P-DMA0, Channel #39 Interrupt
233	cpuss_interrupts_dw0_40_IRQn	Active	CPUSS P-DMA0, Channel #40 Interrupt
234	cpuss_interrupts_dw0_41_IRQn	Active	CPUSS P-DMA0, Channel #41 Interrupt
235	cpuss_interrupts_dw0_42_IRQn	Active	CPUSS P-DMA0, Channel #42 Interrupt
236	cpuss_interrupts_dw0_43_IRQn	Active	CPUSS P-DMA0, Channel #43 Interrupt
237	cpuss_interrupts_dw0_44_IRQn	Active	CPUSS P-DMA0, Channel #44 Interrupt
238	cpuss_interrupts_dw0_45_IRQn	Active	CPUSS P-DMA0, Channel #45 Interrupt
239	cpuss_interrupts_dw0_46_IRQn	Active	CPUSS P-DMA0, Channel #46 Interrupt
240	cpuss_interrupts_dw0_47_IRQn	Active	CPUSS P-DMA0, Channel #47 Interrupt
241	cpuss_interrupts_dw0_48_IRQn	Active	CPUSS P-DMA0, Channel #48 Interrupt
242	cpuss_interrupts_dw0_49_IRQn	Active	CPUSS P-DMA0, Channel #49 Interrupt
243	cpuss_interrupts_dw0_50_IRQn	Active	CPUSS P-DMA0, Channel #50 Interrupt
244	cpuss_interrupts_dw0_51_IRQn	Active	CPUSS P-DMA0, Channel #51 Interrupt
245	cpuss_interrupts_dw0_52_IRQn	Active	CPUSS P-DMA0, Channel #52 Interrupt
246	cpuss_interrupts_dw0_53_IRQn	Active	CPUSS P-DMA0, Channel #53 Interrupt
247	cpuss_interrupts_dw0_54_IRQn	Active	CPUSS P-DMA0, Channel #54 Interrupt
248	cpuss_interrupts_dw0_55_IRQn	Active	CPUSS P-DMA0, Channel #55 Interrupt
249	cpuss_interrupts_dw0_56_IRQn	Active	CPUSS P-DMA0, Channel #56 Interrupt
250	cpuss_interrupts_dw0_57_IRQn	Active	CPUSS P-DMA0, Channel #57 Interrupt
251	cpuss_interrupts_dw0_58_IRQn	Active	CPUSS P-DMA0, Channel #58 Interrupt
252	cpuss_interrupts_dw0_59_IRQn	Active	CPUSS P-DMA0, Channel #59 Interrupt
253	cpuss_interrupts_dw0_60_IRQn	Active	CPUSS P-DMA0, Channel #60 Interrupt
254	cpuss_interrupts_dw0_61_IRQn	Active	CPUSS P-DMA0, Channel #61 Interrupt
255	cpuss_interrupts_dw0_62_IRQn	Active	CPUSS P-DMA0, Channel #62 Interrupt
256	cpuss_interrupts_dw0_63_IRQn	Active	CPUSS P-DMA0, Channel #63 Interrupt
257	cpuss_interrupts_dw0_64_IRQn	Active	CPUSS P-DMA0, Channel #64 Interrupt
258	cpuss_interrupts_dw0_65_IRQn	Active	CPUSS P-DMA0, Channel #65 Interrupt
259	cpuss_interrupts_dw0_66_IRQn	Active	CPUSS P-DMA0, Channel #66 Interrupt
260	cpuss_interrupts_dw0_67_IRQn	Active	CPUSS P-DMA0, Channel #67 Interrupt
261	cpuss_interrupts_dw0_68_IRQn	Active	CPUSS P-DMA0, Channel #68 Interrupt
262	cpuss_interrupts_dw0_69_IRQn	Active	CPUSS P-DMA0, Channel #69 Interrupt
263	cpuss_interrupts_dw0_70_IRQn	Active	CPUSS P-DMA0, Channel #70 Interrupt
264	cpuss_interrupts_dw0_71_IRQn	Active	CPUSS P-DMA0, Channel #71 Interrupt
265	cpuss_interrupts_dw0_72_IRQn	Active	CPUSS P-DMA0, Channel #72 Interrupt
266	cpuss_interrupts_dw0_73_IRQn	Active	CPUSS P-DMA0, Channel #73 Interrupt
267	cpuss_interrupts_dw0_74_IRQn	Active	CPUSS P-DMA0, Channel #74 Interrupt
268	cpuss_interrupts_dw0_75_IRQn	Active	CPUSS P-DMA0, Channel #75 Interrupt
269	cpuss_interrupts_dw0_76_IRQn	Active	CPUSS P-DMA0, Channel #76 Interrupt
270	cpuss_interrupts_dw0_77_IRQn	Active	CPUSS P-DMA0, Channel #77 Interrupt
271	cpuss_interrupts_dw0_78_IRQn	Active	CPUSS P-DMA0, Channel #78 Interrupt

Table 19 Peripheral interrupt assignments and wake-up sources (Preliminary) *(continued)*

Interrupt	Source	Power Mode	Description
272	cpuss_interrupts_dw0_79_IRQn	Active	CPUSS P-DMA0, Channel #79 Interrupt
273	cpuss_interrupts_dw0_80_IRQn	Active	CPUSS P-DMA0, Channel #80 Interrupt
274	cpuss_interrupts_dw0_81_IRQn	Active	CPUSS P-DMA0, Channel #81 Interrupt
275	cpuss_interrupts_dw0_82_IRQn	Active	CPUSS P-DMA0, Channel #82 Interrupt
276	cpuss_interrupts_dw0_83_IRQn	Active	CPUSS P-DMA0, Channel #83 Interrupt
277	cpuss_interrupts_dw0_84_IRQn	Active	CPUSS P-DMA0, Channel #84 Interrupt
278	cpuss_interrupts_dw0_85_IRQn	Active	CPUSS P-DMA0, Channel #85 Interrupt
279	cpuss_interrupts_dw0_86_IRQn	Active	CPUSS P-DMA0, Channel #86 Interrupt
280	cpuss_interrupts_dw0_87_IRQn	Active	CPUSS P-DMA0, Channel #87 Interrupt
281	cpuss_interrupts_dw0_88_IRQn	Active	CPUSS P-DMA0, Channel #88 Interrupt
282	cpuss_interrupts_dw0_89_IRQn	Active	CPUSS P-DMA0, Channel #89 Interrupt
283	cpuss_interrupts_dw0_90_IRQn	Active	CPUSS P-DMA0, Channel #90 Interrupt
284	cpuss_interrupts_dw0_91_IRQn	Active	CPUSS P-DMA0, Channel #91 Interrupt
285	cpuss_interrupts_dw0_92_IRQn	Active	CPUSS P-DMA0, Channel #92 Interrupt
286	cpuss_interrupts_dw0_93_IRQn	Active	CPUSS P-DMA0, Channel #93 Interrupt
287	cpuss_interrupts_dw0_94_IRQn	Active	CPUSS P-DMA0, Channel #94 Interrupt
288	cpuss_interrupts_dw0_95_IRQn	Active	CPUSS P-DMA0, Channel #95 Interrupt
289	cpuss_interrupts_dw0_96_IRQn	Active	CPUSS P-DMA0, Channel #96 Interrupt
290	cpuss_interrupts_dw0_97_IRQn	Active	CPUSS P-DMA0, Channel #97 Interrupt
291	cpuss_interrupts_dw0_98_IRQn	Active	CPUSS P-DMA0, Channel #98 Interrupt
292	cpuss_interrupts_dw0_99_IRQn	Active	CPUSS P-DMA0, Channel #99 Interrupt
293	cpuss_interrupts_dw1_0_IRQn	Active	CPUSS P-DMA1, Channel #0 Interrupt
294	cpuss_interrupts_dw1_1_IRQn	Active	CPUSS P-DMA1, Channel #1 Interrupt
295	cpuss_interrupts_dw1_2_IRQn	Active	CPUSS P-DMA1, Channel #2 Interrupt
296	cpuss_interrupts_dw1_3_IRQn	Active	CPUSS P-DMA1, Channel #3 Interrupt
297	cpuss_interrupts_dw1_4_IRQn	Active	CPUSS P-DMA1, Channel #4 Interrupt
298	cpuss_interrupts_dw1_5_IRQn	Active	CPUSS P-DMA1, Channel #5 Interrupt
299	cpuss_interrupts_dw1_6_IRQn	Active	CPUSS P-DMA1, Channel #6 Interrupt
300	cpuss_interrupts_dw1_7_IRQn	Active	CPUSS P-DMA1, Channel #7 Interrupt
301	cpuss_interrupts_dw1_8_IRQn	Active	CPUSS P-DMA1, Channel #8 Interrupt
302	cpuss_interrupts_dw1_9_IRQn	Active	CPUSS P-DMA1, Channel #9 Interrupt
303	cpuss_interrupts_dw1_10_IRQn	Active	CPUSS P-DMA1, Channel #10 Interrupt
304	cpuss_interrupts_dw1_11_IRQn	Active	CPUSS P-DMA1, Channel #11 Interrupt
305	cpuss_interrupts_dw1_12_IRQn	Active	CPUSS P-DMA1, Channel #12 Interrupt
306	cpuss_interrupts_dw1_13_IRQn	Active	CPUSS P-DMA1, Channel #13 Interrupt
307	cpuss_interrupts_dw1_14_IRQn	Active	CPUSS P-DMA1, Channel #14 Interrupt
308	cpuss_interrupts_dw1_15_IRQn	Active	CPUSS P-DMA1, Channel #15 Interrupt
309	cpuss_interrupts_dw1_16_IRQn	Active	CPUSS P-DMA1, Channel #16 Interrupt
310	cpuss_interrupts_dw1_17_IRQn	Active	CPUSS P-DMA1, Channel #17 Interrupt
311	cpuss_interrupts_dw1_18_IRQn	Active	CPUSS P-DMA1, Channel #18 Interrupt
312	cpuss_interrupts_dw1_19_IRQn	Active	CPUSS P-DMA1, Channel #19 Interrupt
313	cpuss_interrupts_dw1_20_IRQn	Active	CPUSS P-DMA1, Channel #20 Interrupt
314	cpuss_interrupts_dw1_21_IRQn	Active	CPUSS P-DMA1, Channel #21 Interrupt
315	cpuss_interrupts_dw1_22_IRQn	Active	CPUSS P-DMA1, Channel #22 Interrupt

Table 19 Peripheral interrupt assignments and wake-up sources (Preliminary) *(continued)*

Interrupt	Source	Power Mode	Description
316	cpuss_interrupts_dw1_23_IRQn	Active	CPUSS P-DMA1, Channel #23 Interrupt
317	cpuss_interrupts_dw1_24_IRQn	Active	CPUSS P-DMA1, Channel #24 Interrupt
318	cpuss_interrupts_dw1_25_IRQn	Active	CPUSS P-DMA1, Channel #25 Interrupt
319	cpuss_interrupts_dw1_26_IRQn	Active	CPUSS P-DMA1, Channel #26 Interrupt
320	cpuss_interrupts_dw1_27_IRQn	Active	CPUSS P-DMA1, Channel #27 Interrupt
321	cpuss_interrupts_dw1_28_IRQn	Active	CPUSS P-DMA1, Channel #28 Interrupt
322	cpuss_interrupts_dw1_29_IRQn	Active	CPUSS P-DMA1, Channel #29 Interrupt
323	cpuss_interrupts_dw1_30_IRQn	Active	CPUSS P-DMA1, Channel #30 Interrupt
324	cpuss_interrupts_dw1_31_IRQn	Active	CPUSS P-DMA1, Channel #31 Interrupt
325	cpuss_interrupts_dw1_32_IRQn	Active	CPUSS P-DMA1, Channel #32 Interrupt
326	cpuss_interrupts_dw1_33_IRQn	Active	CPUSS P-DMA1, Channel #33 Interrupt
327	cpuss_interrupts_dw1_34_IRQn	Active	CPUSS P-DMA1, Channel #34 Interrupt
328	cpuss_interrupts_dw1_35_IRQn	Active	CPUSS P-DMA1, Channel #35 Interrupt
329	cpuss_interrupts_dw1_36_IRQn	Active	CPUSS P-DMA1, Channel #36 Interrupt
330	cpuss_interrupts_dw1_37_IRQn	Active	CPUSS P-DMA1, Channel #37 Interrupt
331	cpuss_interrupts_dw1_38_IRQn	Active	CPUSS P-DMA1, Channel #38 Interrupt
332	cpuss_interrupts_dw1_39_IRQn	Active	CPUSS P-DMA1, Channel #39 Interrupt
333	cpuss_interrupts_dw1_40_IRQn	Active	CPUSS P-DMA1, Channel #40 Interrupt
334	cpuss_interrupts_dw1_41_IRQn	Active	CPUSS P-DMA1, Channel #41 Interrupt
335	cpuss_interrupts_dw1_42_IRQn	Active	CPUSS P-DMA1, Channel #42 Interrupt
336	cpuss_interrupts_dw1_43_IRQn	Active	CPUSS P-DMA1, Channel #43 Interrupt
337	cpuss_interrupts_dw1_44_IRQn	Active	CPUSS P-DMA1, Channel #44 Interrupt
338	cpuss_interrupts_dw1_45_IRQn	Active	CPUSS P-DMA1, Channel #45 Interrupt
339	cpuss_interrupts_dw1_46_IRQn	Active	CPUSS P-DMA1, Channel #46 Interrupt
340	cpuss_interrupts_dw1_47_IRQn	Active	CPUSS P-DMA1, Channel #47 Interrupt
341	cpuss_interrupts_dw1_48_IRQn	Active	CPUSS P-DMA1, Channel #48 Interrupt
342	cpuss_interrupts_dw1_49_IRQn	Active	CPUSS P-DMA1, Channel #49 Interrupt
343	cpuss_interrupts_dw1_50_IRQn	Active	CPUSS P-DMA1, Channel #50 Interrupt
344	cpuss_interrupts_dw1_51_IRQn	Active	CPUSS P-DMA1, Channel #51 Interrupt
345	cpuss_interrupts_dw1_52_IRQn	Active	CPUSS P-DMA1, Channel #52 Interrupt
346	cpuss_interrupts_dw1_53_IRQn	Active	CPUSS P-DMA1, Channel #53 Interrupt
347	cpuss_interrupts_dw1_54_IRQn	Active	CPUSS P-DMA1, Channel #54 Interrupt
348	cpuss_interrupts_dw1_55_IRQn	Active	CPUSS P-DMA1, Channel #55 Interrupt
349	cpuss_interrupts_dw1_56_IRQn	Active	CPUSS P-DMA1, Channel #56 Interrupt
350	cpuss_interrupts_dw1_57_IRQn	Active	CPUSS P-DMA1, Channel #57 Interrupt
351	tcpwm_0_interrupts_0_IRQn	Active	TCPWM0 Group #0, Counter #0 Interrupt
352	tcpwm_0_interrupts_1_IRQn	Active	TCPWM0 Group #0, Counter #1 Interrupt
353	tcpwm_0_interrupts_2_IRQn	Active	TCPWM0 Group #0, Counter #2 Interrupt
354	tcpwm_0_interrupts_3_IRQn	Active	TCPWM0 Group #0, Counter #3 Interrupt
355	tcpwm_0_interrupts_4_IRQn	Active	TCPWM0 Group #0, Counter #4 Interrupt
356	tcpwm_0_interrupts_5_IRQn	Active	TCPWM0 Group #0, Counter #5 Interrupt
357	tcpwm_0_interrupts_6_IRQn	Active	TCPWM0 Group #0, Counter #6 Interrupt
358	tcpwm_0_interrupts_7_IRQn	Active	TCPWM0 Group #0, Counter #7 Interrupt
359	tcpwm_0_interrupts_8_IRQn	Active	TCPWM0 Group #0, Counter #8 Interrupt

Table 19 Peripheral interrupt assignments and wake-up sources (Preliminary) *(continued)*

Interrupt	Source	Power Mode	Description
360	tcpwm_0_interrupts_9_IRQn	Active	TCPWM0 Group #0, Counter #9 Interrupt
361	tcpwm_0_interrupts_10_IRQn	Active	TCPWM0 Group #0, Counter #10 Interrupt
362	tcpwm_0_interrupts_11_IRQn	Active	TCPWM0 Group #0, Counter #11 Interrupt
363	tcpwm_0_interrupts_12_IRQn	Active	TCPWM0 Group #0, Counter #12 Interrupt
364	tcpwm_0_interrupts_13_IRQn	Active	TCPWM0 Group #0, Counter #13 Interrupt
365	tcpwm_0_interrupts_14_IRQn	Active	TCPWM0 Group #0, Counter #14 Interrupt
366	tcpwm_0_interrupts_15_IRQn	Active	TCPWM0 Group #0, Counter #15 Interrupt
367	tcpwm_0_interrupts_16_IRQn	Active	TCPWM0 Group #0, Counter #16 Interrupt
368	tcpwm_0_interrupts_17_IRQn	Active	TCPWM0 Group #0, Counter #17 Interrupt
369	tcpwm_0_interrupts_18_IRQn	Active	TCPWM0 Group #0, Counter #18 Interrupt
370	tcpwm_0_interrupts_19_IRQn	Active	TCPWM0 Group #0, Counter #19 Interrupt
371	tcpwm_0_interrupts_20_IRQn	Active	TCPWM0 Group #0, Counter #20 Interrupt
372	tcpwm_0_interrupts_21_IRQn	Active	TCPWM0 Group #0, Counter #21 Interrupt
373	tcpwm_0_interrupts_22_IRQn	Active	TCPWM0 Group #0, Counter #22 Interrupt
374	tcpwm_0_interrupts_23_IRQn	Active	TCPWM0 Group #0, Counter #23 Interrupt
375	tcpwm_0_interrupts_24_IRQn	Active	TCPWM0 Group #0, Counter #24 Interrupt
376	tcpwm_0_interrupts_25_IRQn	Active	TCPWM0 Group #0, Counter #25 Interrupt
377	tcpwm_0_interrupts_26_IRQn	Active	TCPWM0 Group #0, Counter #26 Interrupt
378	tcpwm_0_interrupts_27_IRQn	Active	TCPWM0 Group #0, Counter #27 Interrupt
379	tcpwm_0_interrupts_28_IRQn	Active	TCPWM0 Group #0, Counter #28 Interrupt
380	tcpwm_0_interrupts_29_IRQn	Active	TCPWM0 Group #0, Counter #29 Interrupt
381	tcpwm_0_interrupts_30_IRQn	Active	TCPWM0 Group #0, Counter #30 Interrupt
382	tcpwm_0_interrupts_31_IRQn	Active	TCPWM0 Group #0, Counter #31 Interrupt
383	tcpwm_0_interrupts_32_IRQn	Active	TCPWM0 Group #0, Counter #32 Interrupt
384	tcpwm_0_interrupts_33_IRQn	Active	TCPWM0 Group #0, Counter #33 Interrupt
385	tcpwm_0_interrupts_34_IRQn	Active	TCPWM0 Group #0, Counter #34 Interrupt
386	tcpwm_0_interrupts_35_IRQn	Active	TCPWM0 Group #0, Counter #35 Interrupt
387	tcpwm_0_interrupts_36_IRQn	Active	TCPWM0 Group #0, Counter #36 Interrupt
388	tcpwm_0_interrupts_37_IRQn	Active	TCPWM0 Group #0, Counter #37 Interrupt
389	tcpwm_0_interrupts_38_IRQn	Active	TCPWM0 Group #0, Counter #38 Interrupt
390	tcpwm_0_interrupts_39_IRQn	Active	TCPWM0 Group #0, Counter #39 Interrupt
391	tcpwm_0_interrupts_40_IRQn	Active	TCPWM0 Group #0, Counter #40 Interrupt
392	tcpwm_0_interrupts_41_IRQn	Active	TCPWM0 Group #0, Counter #41 Interrupt
393	tcpwm_0_interrupts_42_IRQn	Active	TCPWM0 Group #0, Counter #42 Interrupt
394	tcpwm_0_interrupts_43_IRQn	Active	TCPWM0 Group #0, Counter #43 Interrupt
395	tcpwm_0_interrupts_44_IRQn	Active	TCPWM0 Group #0, Counter #44 Interrupt
396	tcpwm_0_interrupts_45_IRQn	Active	TCPWM0 Group #0, Counter #45 Interrupt
397	tcpwm_0_interrupts_46_IRQn	Active	TCPWM0 Group #0, Counter #46 Interrupt
398	tcpwm_0_interrupts_47_IRQn	Active	TCPWM0 Group #0, Counter #47 Interrupt
399	tcpwm_0_interrupts_48_IRQn	Active	TCPWM0 Group #0, Counter #48 Interrupt
400	tcpwm_0_interrupts_49_IRQn	Active	TCPWM0 Group #0, Counter #49 Interrupt
401	tcpwm_0_interrupts_50_IRQn	Active	TCPWM0 Group #0, Counter #50 Interrupt
402	tcpwm_0_interrupts_51_IRQn	Active	TCPWM0 Group #0, Counter #51 Interrupt
403	tcpwm_0_interrupts_52_IRQn	Active	TCPWM0 Group #0, Counter #52 Interrupt

Table 19 Peripheral interrupt assignments and wake-up sources (Preliminary) *(continued)*

Interrupt	Source	Power Mode	Description
404	tcpwm_0_interrupts_53_IRQn	Active	TCPWM0 Group #0, Counter #53 Interrupt
405	tcpwm_0_interrupts_54_IRQn	Active	TCPWM0 Group #0, Counter #54 Interrupt
406	tcpwm_0_interrupts_55_IRQn	Active	TCPWM0 Group #0, Counter #55 Interrupt
407	tcpwm_0_interrupts_56_IRQn	Active	TCPWM0 Group #0, Counter #56 Interrupt
408	tcpwm_0_interrupts_57_IRQn	Active	TCPWM0 Group #0, Counter #57 Interrupt
409	tcpwm_0_interrupts_58_IRQn	Active	TCPWM0 Group #0, Counter #58 Interrupt
410	tcpwm_0_interrupts_59_IRQn	Active	TCPWM0 Group #0, Counter #59 Interrupt
411	tcpwm_0_interrupts_60_IRQn	Active	TCPWM0 Group #0, Counter #60 Interrupt
412	tcpwm_0_interrupts_61_IRQn	Active	TCPWM0 Group #0, Counter #61 Interrupt
413	tcpwm_0_interrupts_62_IRQn	Active	TCPWM0 Group #0, Counter #62 Interrupt
414	tcpwm_0_interrupts_256_IRQn	Active	TCPWM0 Group #1, Counter #0 Interrupt
415	tcpwm_0_interrupts_257_IRQn	Active	TCPWM0 Group #1, Counter #1 Interrupt
416	tcpwm_0_interrupts_258_IRQn	Active	TCPWM0 Group #1, Counter #2 Interrupt
417	tcpwm_0_interrupts_259_IRQn	Active	TCPWM0 Group #1, Counter #3 Interrupt
418	tcpwm_0_interrupts_260_IRQn	Active	TCPWM0 Group #1, Counter #4 Interrupt
419	tcpwm_0_interrupts_261_IRQn	Active	TCPWM0 Group #1, Counter #5 Interrupt
420	tcpwm_0_interrupts_262_IRQn	Active	TCPWM0 Group #1, Counter #6 Interrupt
421	tcpwm_0_interrupts_263_IRQn	Active	TCPWM0 Group #1, Counter #7 Interrupt
422	tcpwm_0_interrupts_264_IRQn	Active	TCPWM0 Group #1, Counter #8 Interrupt
423	tcpwm_0_interrupts_265_IRQn	Active	TCPWM0 Group #1, Counter #9 Interrupt
424	tcpwm_0_interrupts_266_IRQn	Active	TCPWM0 Group #1, Counter #10 Interrupt
425	tcpwm_0_interrupts_267_IRQn	Active	TCPWM0 Group #1, Counter #11 Interrupt
426	tcpwm_0_interrupts_512_IRQn	Active	TCPWM0 Group #2, Counter #0 Interrupt
427	tcpwm_0_interrupts_513_IRQn	Active	TCPWM0 Group #2, Counter #1 Interrupt
428	tcpwm_0_interrupts_514_IRQn	Active	TCPWM0 Group #2, Counter #2 Interrupt
429	tcpwm_0_interrupts_515_IRQn	Active	TCPWM0 Group #2, Counter #3 Interrupt
430	tcpwm_0_interrupts_516_IRQn	Active	TCPWM0 Group #2, Counter #4 Interrupt
431	tcpwm_0_interrupts_517_IRQn	Active	TCPWM0 Group #2, Counter #5 Interrupt
432	tcpwm_0_interrupts_518_IRQn	Active	TCPWM0 Group #2, Counter #6 Interrupt
433	tcpwm_0_interrupts_519_IRQn	Active	TCPWM0 Group #2, Counter #7 Interrupt
434	smif_0_interrupt_IRQn	Active	SMIF0 (QSPI) interrupt
435	eth_0_interrupt_eth_0_IRQn	Active	Ethernet0 interrupt for dma_priority_queue0
436	eth_0_interrupt_eth_2_IRQn	Active	Ethernet0 interrupt for dma_priority_queue2
437	eth_0_interrupt_eth_1_IRQn	Active	Ethernet0 interrupt for dma_priority_queue1
438	sdhc_0_interrupt_general_IRQn	Active	SDHC0 general interrupt
439	sdhc_0_interrupt_wakeup_IRQn	Active	SDHC0 wakeup interrupt
440	audioss_0_interrupt_i2s_IRQn	Active	AUDIOSS I^2S0 interrupt
441	audioss_1_interrupt_i2s_IRQn	Active	AUDIOSS I^2S1 interrupt
442	audioss_2_interrupt_i2s_IRQn	Active	AUDIOSS I^2S2 interrupt

15 Core interrupt types

Table 20 Core interrupt types

Interrupt	Source	Power mode	Description
0	CPUIntIdx0_IRQn[32]	Deep Sleep	CPU User Interrupt #0
1	CPUIntIdx1_IRQn[32]	Deep Sleep	CPU User Interrupt #1
2	CPUIntIdx2_IRQn	Deep Sleep	CPU User Interrupt #2
3	CPUIntIdx3_IRQn	Deep Sleep	CPU User Interrupt #3
4	CPUIntIdx4_IRQn	Deep Sleep	CPU User Interrupt #4
5	CPUIntIdx5_IRQn	Deep Sleep	CPU User Interrupt #5
6	CPUIntIdx6_IRQn	Deep Sleep	CPU User Interrupt #6
7	CPUIntIdx7_IRQn	Deep Sleep	CPU User Interrupt #7
8	Internal0_IRQn	Active	Internal Software Interrupt #0
9	Internal1_IRQn	Active	Internal Software Interrupt #1
10	Internal2_IRQn	Active	Internal Software Interrupt #2
11	Internal3_IRQn	Active	Internal Software Interrupt #3
12	Internal4_IRQn	Active	Internal Software Interrupt #4
13	Internal5_IRQn	Active	Internal Software Interrupt #5
14	Internal6_IRQn	Active	Internal Software Interrupt #6
15	Internal7_IRQn	Active	Internal Software Interrupt #7

Note
32. User interrupt cannot be used for CM0+ application, as it is used internally by system calls. Note, this does not impact CM7 application.

16 Trigger multiplexer

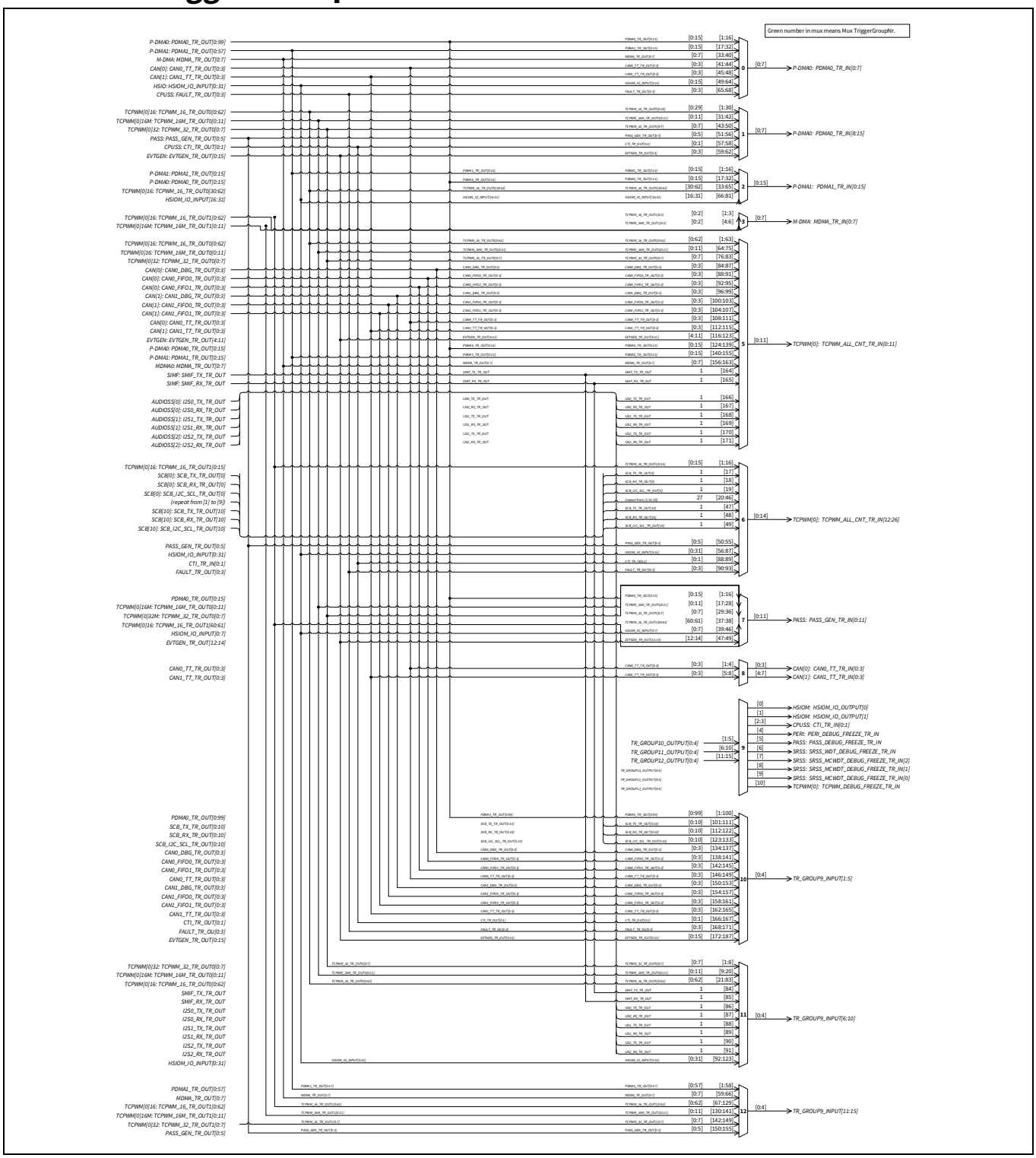

Figure 13 Trigger multiplexer group [33]

Note

33. This diagram shows only the TRIG_LABEL; the final trigger formation is based on the formula TRIG_{PREFIX(IN/OUT)}_{MUX_x}_{TRIG_LABEL} and the information provided in **Table 21** and **Table 22**.

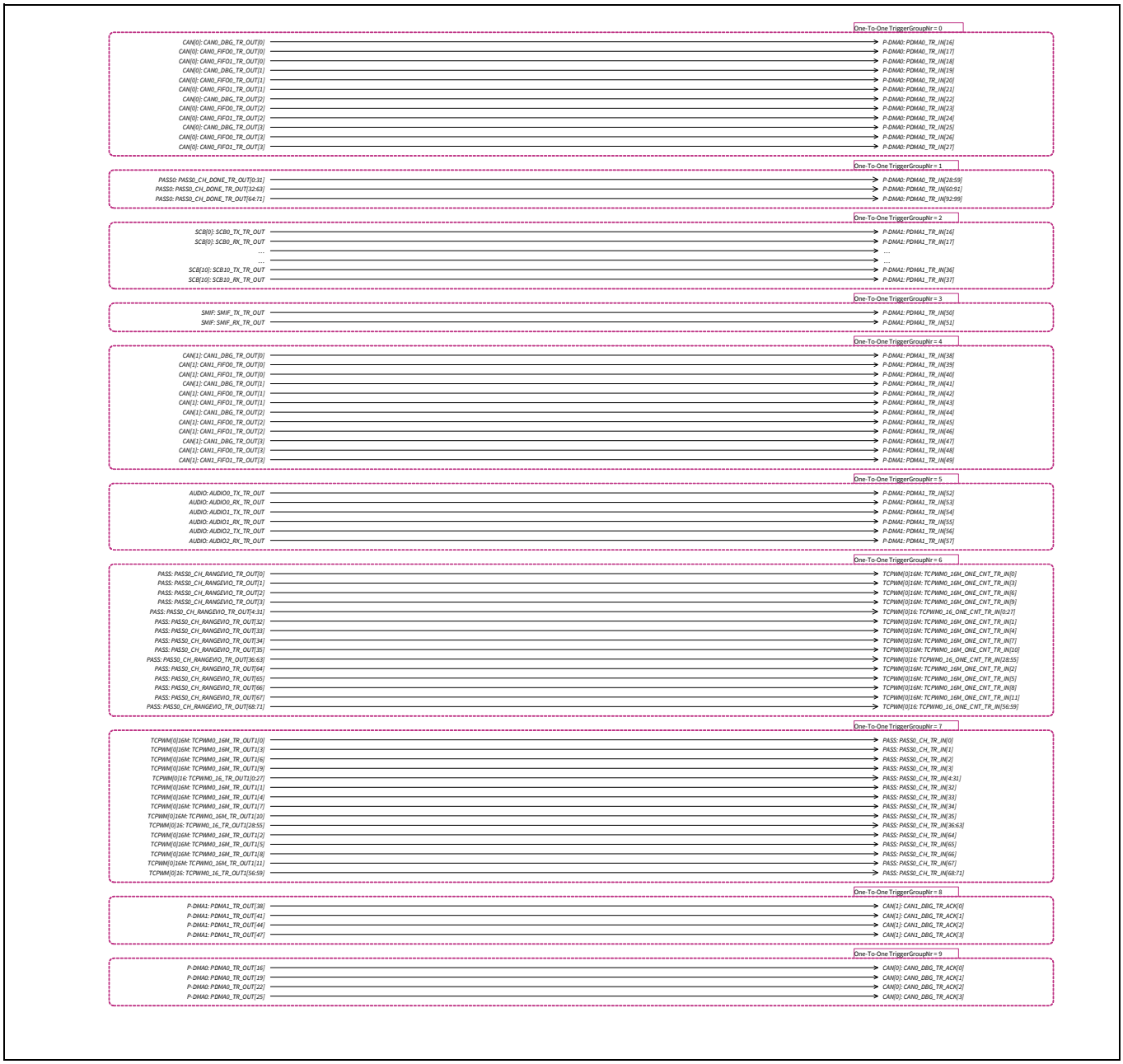

Figure 14 Triggers one-to-one[34]

Note

34. The diagram shows only the TRIG_LABEL; the final trigger formation is based on the formula TRIG_{PREFIX(IN_1TO1/OUT_1TO1)}_{x}_{TRIG_LABEL} and the information provided in **Table 23**.

17 Triggers group inputs

Table 21 Trigger inputs

Input	Trigger	Description
MUX Group 0: P-DMA0 trigger multiplexer		
1:16[35]	PDMA0_TR_OUT[0:15]	Allow P-DMA0 to chain to itself. Channels 0 - 15 are dedicated for chaining
17:32	PDMA1_TR_OUT[0:15]	Cross connections from P-DMA1 to P-DMA0, Channels 0-15 are used
33:40	MDMA_TR_OUT[0:7]	Cross connections from M-DMA0 to P-DMA0
41:44	CAN0_TT_TR_OUT[0:3]	CAN0 TT Sync Outputs
45:48	CAN1_TT_TR_OUT[0:3]	CAN1 TT Sync Outputs
49:64	HSIOM_IO_INPUT[0:15]	I/O Inputs
65:68	FAULT_TR_OUT[0:3]	Fault events
MUX Group 1: TCPWM to P-DMA0 trigger multiplexer		
1:30	TCPWM_16_TR_OUT0[0:29]	16-bit TCPWM0 counters
31:42	TCPWM_16M_TR_OUT0[0:11]	16-bit Motor enhanced TCPWM0 counters
43:50	TCPWM_32_TR_OUT0[0:7]	32-bit TCPWM0 counters
51:56	PASS_GEN_TR_OUT[0:5]	PASS SAR events
57:58	CTI_TR_OUT[0:1]	Trace events
59:62	EVTGEN_TR_OUT[0:3]	Event generator triggers
MUX Group 2: P-DMA1 trigger multiplexer		
1:16	PDMA1_TR_OUT[0:15]	Allow P-DMA1 to chain to itself. Channels 0–15 are dedicated for chaining
17:32	PDMA0_TR_OUT[0:15]	Cross connections from P-DMA0 to P-DMA1, channels 0–15 are used
33:65	TCPWM_16_TR_OUT0[30:62]	16-bit TCPWM0 counters
66:81	HSIOM_IO_INPUT[16:31]	I/O Inputs
MUX Group 3: M-DMA0 trigger multiplexer		
1:3	TCPWM_16_TR_OUT1[0:2]	16-bit TCPWM0 counters
4:6	TCPWM_16M_TR_OUT1[0:2]	16-bit Motor enhanced TCPWM0 counters
MUX Group 5: TCPWM0 Loop back trigger multiplexer		
1:63	TCPWM_16_TR_OUT0[0:62]	16-bit TCPWM0 counters
64:75	TCPWM_16M_TR_OUT0[0:11]	16-bit Motor enhanced TCPWM0 counters
76:83	TCPWM_32_TR_OUT0[0:7]	32-bit TCPWM0 counters
84:87	CAN0_DBG_TR_OUT[0:3]	CAN0 M-DMA0 events
88:91	CAN0_FIFO0_TR_OUT[0:3]	CAN0 FIFO0 events
92:95	CAN0_FIFO1_TR_OUT[0:3]	CAN0 FIFO1 events
96:99	CAN1_DBG_TR_OUT[0:3]	CAN1 M-DMA0 events
100:103	CAN1_FIFO0_TR_OUT[0:3]	CAN1 FIFO0 events
104:107	CAN1_FIFO1_TR_OUT[0:3]	CAN1 FIFO1 events
108:111	CAN0_TT_TR_OUT[0:3]	CAN0 TT Sync Outputs
112:115	CAN1_TT_TR_OUT[0:3]	CAN1 TT Sync Outputs
116:123	EVTGEN_TR_OUT[4:11]	Event generator triggers
124:139	PDMA0_TR_OUT[0:15]	P-DMA0 general-purpose triggers

Note
35. “x:y” depicts a range starting from ‘x’ through ‘y’.

Table 21 Trigger inputs *(continued)*

Input	Trigger	Description
140:155	PDMA1_TR_OUT[0:15]	P-DMA1 general-purpose triggers
156:163	MDMA_TR_OUT[0:7]	M-DMA0 events
164	SMIF_TX_TR_OUT	SMIF0 TX trigger
165	SMIF_RX_TR_OUT	SMIF0 RX trigger
166	I2S0_TX_TR_OUT	I^2S0 TX trigger
167	I2S0_RX_TR_OUT	I^2S0 RX trigger
168	I2S1_TX_TR_OUT	I^2S1 TX trigger
169	I2S1_RX_TR_OUT	I^2S1 RX trigger
170	I2S2_TX_TR_OUT	I^2S2 TX trigger
171	I2S2_RX_TR_OUT	I^2S2 RX trigger
MUX Group 6: TCPWM0 trigger Multiplexer		
1:16	TCPWM_16_TR_OUT1[0:15]	16-bit TCPWM0 counters
17	SCB_TX_TR_OUT[0]	SCB0 TX trigger
18	SCB_RX_TR_OUT[0]	SCB0 RX trigger
19	SCB_I2C_SCL_TR_OUT[0]	SCB0 I^2C trigger
20	SCB_TX_TR_OUT[1]	SCB1 TX trigger
21	SCB_RX_TR_OUT[1]	SCB1 RX trigger
22	SCB_I2C_SCL_TR_OUT[1]	SCB1 I^2C trigger
23	SCB_TX_TR_OUT[2]	SCB2 TX trigger
24	SCB_RX_TR_OUT[2]	SCB2 RX trigger
25	SCB_I2C_SCL_TR_OUT[2]	SCB2 I^2C trigger
26	SCB_TX_TR_OUT[3]	SCB3 TX trigger
27	SCB_RX_TR_OUT[3]	SCB3 RX trigger
28	SCB_I2C_SCL_TR_OUT[3]	SCB3 I^2C trigger
29	SCB_TX_TR_OUT[4]	SCB4 TX trigger
30	SCB_RX_TR_OUT[4]	SCB4 RX trigger
31	SCB_I2C_SCL_TR_OUT[4]	SCB4 I^2C trigger
32	SCB_TX_TR_OUT[5]	SCB5 TX trigger
33	SCB_RX_TR_OUT[5]	SCB5 RX trigger
34	SCB_I2C_SCL_TR_OUT[5]	SCB5 I^2C trigger
35	SCB_TX_TR_OUT[6]	SCB6 TX trigger
36	SCB_RX_TR_OUT[6]	SCB6 RX trigger
37	SCB_I2C_SCL_TR_OUT[6]	SCB6 I^2C trigger
38	SCB_TX_TR_OUT[7]	SCB7 TX trigger
39	SCB_RX_TR_OUT[7]	SCB7 RX trigger
40	SCB_I2C_SCL_TR_OUT[7]	SCB7 I^2C trigger
41	SCB_TX_TR_OUT[8]	SCB8 TX trigger
42	SCB_RX_TR_OUT[8]	SCB8 RX trigger
43	SCB_I2C_SCL_TR_OUT[8]	SCB8 I^2C trigger
44	SCB_TX_TR_OUT[9]	SCB9 TX trigger
45	SCB_RX_TR_OUT[9]	SCB9 RX trigger
46	SCB_I2C_SCL_TR_OUT[9]	SCB9 I^2C trigger

Note
35. "x:y" depicts a range starting from 'x' through 'y'.

Table 21 Trigger inputs *(continued)*

Input	Trigger	Description
47	SCB_TX_TR_OUT[10]	SCB10 TX trigger
48	SCB_RX_TR_OUT[10]	SCB10 RX trigger
49	SCB_I2C_SCL_TR_OUT[10]	SCB10 I^2C trigger
50:55	PASS_GEN_TR_OUT[0:5]	PASS SAR events
56:87	HSIOM_IO_INPUT[0:31]	I/O Inputs
88:89	CTI_TR_IN[0:1]	Trace events
90:93	FAULT_TR_OUT[0:3]	Fault events
MUX Group 7: PASS trigger multiplexer		
1:16	PDMA0_TR_OUT[0:15]	General-purpose P-DMA0 triggers
17:28	TCPWM_16M_TR_OUT0[0:11]	16-bit Motor enhanced TCPWM0 counters
29:36	TCPWM_32_TR_OUT0[0:7]	32-bit TCPWM0 counters
37:38	TCPWM_16_TR_OUT1[60:61]	16-bit TCPWM0 counters
39:46	HSIOM_IO_INPUT[0:7]	I/O inputs
47:49	EVTGEN_TR_OUT[12:14]	Event generator triggers
MUX Group 8: CAN TT Sync		
1:4	CAN0_TT_TR_OUT[0:3]	CAN0 TT sync outputs
5:8	CAN1_TT_TR_OUT[0:3]	CAN1 TT sync outputs
MUX Group 9: Debug multiplexer		
1:5	TR_GROUP10_OUTPUT[0:4]	Output from debug reduction multiplexer #1
6:10	TR_GROUP11_OUTPUT[0:4]	Output from debug reduction multiplexer #2
11:15	TR_GROUP12_OUTPUT[0:4]	Output from debug reduction multiplexer #3
MUX Group 10: Debug Reduction #1		
1:100	PDMA0_TR_OUT[0:99]	General-purpose P-DMA0 triggers
101:111	SCB_TX_TR_OUT[0:10]	SCB TX triggers
112:122	SCB_RX_TR_OUT[0:10]	SCB RX triggers
123:133	SCB_I2C_SCL_TR_OUT[0:10]	SCB I^2C triggers
134:137	CAN0_DBG_TR_OUT[0:3]	CAN0 DMA
138:141	CAN0_FIFO0_TR_OUT[0:3]	CAN0 FIFO0
142:145	CAN0_FIFO1_TR_OUT[0:3]	CAN0 FIFO1
146:149	CAN0_TT_TR_OUT[0:3]	CAN0 TT Sync Outputs
150:153	CAN1_DBG_TR_OUT[0:3]	CAN1 DMA
154:157	CAN1_FIFO0_TR_OUT[0:3]	CAN1 FIFO0
158:161	CAN1_FIFO1_TR_OUT[0:3]	CAN1 FIFO1
162:165	CAN1_TT_TR_OUT[0:3]	CAN1 TT Sync Outputs
166:167	CTI_TR_OUT[0:1]	Trace events
168:171	FAULT_TR_OU[0:3]	Fault events
172:187	EVTGEN_TR_OUT[0:15]	EVTGEN Triggers
MUX Group 11: Debug Reduction #2		
1:8	TCPWM_32_TR_OUT0[0:7]	32-bit TCPWM0 counters
9:20	TCPWM_16M_TR_OUT0[0:11]	16-bit Motor enhanced TCPWM0 counters
21:83	TCPWM_16_TR_OUT0[0:62]	16-bit TCPWM0 counters
84	SMIF_TX_TR_OUT	SMIF TX trigger

Note
35. “x:y” depicts a range starting from ‘x’ through ‘y’.

Table 21 Trigger inputs *(continued)*

Input	Trigger	Description
85	SMIF_RX_TR_OUT	SMIF RX trigger
86	I2S0_TX_TR_OUT	I^2S0 TX trigger
87	I2S0_RX_TR_OUT	I^2S0 RX trigger
88	I2S1_TX_TR_OUT	I^2S1 TX trigger
89	I2S1_RX_TR_OUT	I^2S1 RX trigger
90	I2S2_TX_TR_OUT	I^2S2 TX trigger
91	I2S2_RX_TR_OUT	I^2S2 RX trigger
92:123	HSIOM_IO_INPUT[0:31]	I/O inputs
MUX Group 12: Debug Reduction #3		
1:58	PDMA1_TR_OUT[0:57]	General-purpose P-DMA1 triggers
59:66	MDMA_TR_OUT[0:7]	M-DMA0 triggers
67:129	TCPWM_16_TR_OUT1[0:62]	16-bit TCPWM0 counters
130:141	TCPWM_16M_TR_OUT1[0:11]	16-bit Motor enhanced TCPWM0 counters
142:149	TCPWM_32_TR_OUT1[0:7]	32-bit TCPWM0 counters
150:155	PASS_GEN_TR_OUT[0:5]	PASS SAR events

Note
35.“x:y” depicts a range starting from ‘x’ through ‘y’.

18 Triggers group outputs

Table 22 Trigger outputs

Output	Trigger	Description
MUX Group 0: P-DMA0 trigger multiplexer		
0:7	PDMA0_TR_IN[0:7]	Triggers to P-DMA0[0:7]
MUX Group 1: TCPWM to P-DMA0 trigger multiplexer		
0:7	PDMA0_TR_IN[8:15]	Triggers to P-DMA0[8:15]
MUX Group 2: P-DMA1 trigger multiplexer		
0:15	PDMA1_TR_IN[0:15]	Triggers to P-DMA1
MUX Group 3: M-DMA0 trigger multiplexer		
0:7	MDMA_TR_IN[0:7]	Triggers to M-DMA0
MUX Group 5: TCPWM0 loop-back multiplexer		
0:11	TCPWM_ALL_CNT_TR_IN[0:11]	Triggers to TCPWM0
MUX Group 6: TCPWM0 trigger multiplexer		
0:14	TCPWM_ALL_CNT_TR_IN[12:26]	Triggers to TCPWM0
MUX Group 7: PASS trigger multiplexer		
0:11	PASS_GEN_TR_IN[0:11]	Triggers to SAR ADCs
MUX Group 8: CAN TT Sync		
0:3	CAN0_TT_TR_IN[0:3]	CAN0 TT Sync Inputs
4:7	CAN1_TT_TR_IN[0:3]	CAN1 TT Sync Inputs
MUX Group 9: Debug multiplexer		
0	HSIOM_IO_OUTPUT[0]	To HSIOM as an output
1	HSIOM_IO_OUTPUT[1]	To HSIOM as an output
2:3	CTI_TR_IN[0:1]	To the Cross Trigger system
4	PERI_DEBUG_FREEZE_TR_IN	Signal to Freeze PERI operation
5	PASS_DEBUG_FREEZE_TR_IN	Signal to Freeze PASS operation
6	SRSS_WDT_DEBUG_FREEZE_TR_IN	Signal to Freeze WDT operation
7	SRSS_MCWDT_DEBUG_FREEZE_TR_IN[2]	Signal to Freeze MCWDT2 operation
8	SRSS_MCWDT_DEBUG_FREEZE_TR_IN[1]	Signal to Freeze MCWDT1 operation
9	SRSS_MCWDT_DEBUG_FREEZE_TR_IN[0]	Signal to Freeze MCWDT0 operation
10	TCPWM_DEBUG_FREEZE_TR_IN	Signal to Freeze TCPWM0 operation
MUX Group 10: Debug Reduction #1		
0:4	TR_GROUP9_INPUT[1:5]	To main debug multiplexer
MUX Group 11: Debug Reduction #2		
0:4	TR_GROUP9_INPUT[6:10]	To main debug multiplexer
MUX Group 12: Debug Reduction #3		
0:4	TR_GROUP9_INPUT[11:15]	To main debug multiplexer

19 Triggers one-to-one

Table 23 One-to-one triggers

Input	Trigger In	Trigger Out	Description
MUX Group 0: CAN0 to P-DMA0 Triggers			
0	CAN0_DBG_TR_OUT[0]	PDMA0_TR_IN[16]	CAN0, Channel #0 P-DMA0 trigger
1	CAN0_FIFO0_TR_OUT[0]	PDMA0_TR_IN[17]	CAN0, Channel #0 FIFO0 trigger
2	CAN0_FIFO1_TR_OUT[0]	PDMA0_TR_IN[18]	CAN0, Channel #0 FIFO1 trigger
3	CAN0_DBG_TR_OUT[1]	PDMA0_TR_IN[19]	CAN0, Channel #1 P-DMA0 trigger
4	CAN0_FIFO0_TR_OUT[1]	PDMA0_TR_IN[20]	CAN0, Channel #1 FIFO0 trigger
5	CAN0_FIFO1_TR_OUT[1]	PDMA0_TR_IN[21]	CAN0, Channel #1 FIFO1 trigger
6	CAN0_DBG_TR_OUT[2]	PDMA0_TR_IN[22]	CAN0, Channel #2 P-DMA0 trigger
7	CAN0_FIFO0_TR_OUT[2]	PDMA0_TR_IN[23]	CAN0, Channel #2 FIFO0 trigger
8	CAN0_FIFO1_TR_OUT[2]	PDMA0_TR_IN[24]	CAN0, Channel #2 FIFO1 trigger
9	CAN0_DBG_TR_OUT[3]	PDMA0_TR_IN[25]	CAN0, Channel #3 P-DMA0 trigger
10	CAN0_FIFO0_TR_OUT[3]	PDMA0_TR_IN[26]	CAN0, Channel #3 FIFO0 trigger
11	CAN0_FIFO1_TR_OUT[3]	PDMA0_TR_IN[27]	CAN0, Channel #3 FIFO1 trigger
MUX Group 1: PASS SARx to P-DMA0 direct connect			
0:31	PASS0_CH_-DONE_TR_OUT[0:31]	PDMA0_TR_IN[28:59]	PASS SAR0 [0:31] to P-DMA0 direct connect
32:63	PASS0_CH_-DONE_TR_OUT[32:63]	PDMA0_TR_IN[60:91]	PASS SAR1 [0:31] to P-DMA0 direct connect
64:71	PASS0_CH_-DONE_TR_OUT[64:71]	PDMA0_TR_IN[92:99]	PASS SAR2 [0:7] to P-DMA0 direct connect
MUX Group 2: SCBx to P-DMA1 Triggers			
0	SCB0_TX_TR_OUT	PDMA1_TR_IN[16]	SCB0 to P-DMA1 Trigger
1	SCB0_RX_TR_OUT	PDMA1_TR_IN[17]	SCB0 to P-DMA1 Trigger
2	SCB1_TX_TR_OUT	PDMA1_TR_IN[18]	SCB1 to P-DMA1 Trigger
3	SCB1_RX_TR_OUT	PDMA1_TR_IN[19]	SCB1 to P-DMA1 Trigger
4	SCB2_TX_TR_OUT	PDMA1_TR_IN[20]	SCB2 to P-DMA1 Trigger
5	SCB2_RX_TR_OUT	PDMA1_TR_IN[21]	SCB2 to P-DMA1 Trigger
6	SCB3_TX_TR_OUT	PDMA1_TR_IN[22]	SCB3 to P-DMA1 Trigger
7	SCB3_RX_TR_OUT	PDMA1_TR_IN[23]	SCB3 to P-DMA1 Trigger
8	SCB4_TX_TR_OUT	PDMA1_TR_IN[24]	SCB4 to P-DMA1 Trigger
9	SCB4_RX_TR_OUT	PDMA1_TR_IN[25]	SCB4 to P-DMA1 Trigger
10	SCB5_TX_TR_OUT	PDMA1_TR_IN[26]	SCB5 to P-DMA1 Trigger
11	SCB5_RX_TR_OUT	PDMA1_TR_IN[27]	SCB5 to P-DMA1 Trigger
12	SCB6_TX_TR_OUT	PDMA1_TR_IN[28]	SCB6 to P-DMA1 Trigger
13	SCB6_RX_TR_OUT	PDMA1_TR_IN[29]	SCB6 to P-DMA1 Trigger
14	SCB7_TX_TR_OUT	PDMA1_TR_IN[30]	SCB7 to P-DMA1 Trigger
15	SCB7_RX_TR_OUT	PDMA1_TR_IN[31]	SCB7 to P-DMA1 Trigger
16	SCB8_TX_TR_OUT	PDMA1_TR_IN[32]	SCB8 to P-DMA1 Trigger
17	SCB8_RX_TR_OUT	PDMA1_TR_IN[33]	SCB8 to P-DMA1 Trigger
18	SCB9_TX_TR_OUT	PDMA1_TR_IN[34]	SCB9 to P-DMA1 Trigger

Note

36. Each logical channel of SAR ADC[x] can be connected to any of the SAR ADC[x]_y external pin. (x = 0, or 1, or, 2 and y=0 to 31).

Table 23 One-to-one triggers *(continued)*

Input	Trigger In	Trigger Out	Description
19	SCB9_RX_TR_OUT	PDMA1_TR_IN[35]	SCB9 to P-DMA1 Trigger
20	SCB10_TX_TR_OUT	PDMA1_TR_IN[36]	SCB10 to P-DMA1 Trigger
21	SCB10_RX_TR_OUT	PDMA1_TR_IN[37]	SCB10 to P-DMA1 Trigger
MUX Group 3: SMIF0 to P-DMA1 Triggers			
0	SMIF_TX_TR_OUT	PDMA1_TR_IN[50]	SMIF0 to P-DMA1 Trigger
1	SMIF_RX_TR_OUT	PDMA1_TR_IN[51]	SMIF0 to P-DMA1 Trigger
MUX Group 4: CAN1 to P-DMA1 triggers			
0	CAN1_DBG_TR_OUT[0]	PDMA1_TR_IN[38]	CAN1 Channel #0 P-DMA1 trigger
1	CAN1_FIFO0_TR_OUT[0]	PDMA1_TR_IN[39]	CAN1 Channel #0 FIFO0 trigger
2	CAN1_FIFO1_TR_OUT[0]	PDMA1_TR_IN[40]	CAN1 Channel #0 FIFO1 trigger
3	CAN1_DBG_TR_OUT[1]	PDMA1_TR_IN[41]	CAN1 Channel #1 P-DMA1 trigger
4	CAN1_FIFO0_TR_OUT[1]	PDMA1_TR_IN[42]	CAN1 Channel #1 FIFO0 trigger
5	CAN1_FIFO1_TR_OUT[1]	PDMA1_TR_IN[43]	CAN1 Channel #1 FIFO1 trigger
6	CAN1_DBG_TR_OUT[2]	PDMA1_TR_IN[44]	CAN1 Channel #2 P-DMA1 trigger
7	CAN1_FIFO0_TR_OUT[2]	PDMA1_TR_IN[45]	CAN1 Channel #2 FIFO0 trigger
8	CAN1_FIFO1_TR_OUT[2]	PDMA1_TR_IN[46]	CAN1 Channel #2 FIFO1 trigger
9	CAN1_DBG_TR_OUT[3]	PDMA1_TR_IN[47]	CAN1 Channel #3 P-DMA1 trigger
10	CAN1_FIFO0_TR_OUT[3]	PDMA1_TR_IN[48]	CAN1 Channel #3 FIFO0 trigger
11	CAN1_FIFO1_TR_OUT[3]	PDMA1_TR_IN[49]	CAN1 Channel #3 FIFO1 trigger
MUX Group 5: I^2Sx to P-DMA1 Triggers			
0	AUDIO0_TX_TR_OUT	PDMA1_TR_IN[52]	I^2S0 TX to P-DMA1 trigger
1	AUDIO0_RX_TR_OUT	PDMA1_TR_IN[53]	I^2S0 RX to P-DMA1 trigger
2	AUDIO1_TX_TR_OUT	PDMA1_TR_IN[54]	I^2S1 TX to P-DMA1 trigger
3	AUDIO1_RX_TR_OUT	PDMA1_TR_IN[55]	I^2S1 RX to P-DMA1 trigger
4	AUDIO2_TX_TR_OUT	PDMA1_TR_IN[56]	I^2S2 TX to P-DMA1 trigger
5	AUDIO2_RX_TR_OUT	PDMA1_TR_IN[57]	I^2S2 RX to P-DMA1 trigger
MUX Group 6: PASS SARx to TCPWM0 direct connect			
0	PASS0_CH_RAN-GEVIO_TR_OUT[0]	TCPWM0_16M_ONE_CNT_TR_IN[0]	SAR0 ch#0[36], range violation to TCPWM0 Group #1 Counter #00 trig = 4
1	PASS0_CH_RAN-GEVIO_TR_OUT[1]	TCPWM0_16M_ONE_CNT_TR_IN[3]	SAR0 ch#1, range violation to TCPWM0 Group #1 Counter #03 trig = 4
2	PASS0_CH_RAN-GEVIO_TR_OUT[2]	TCPWM0_16M_ONE_CNT_TR_IN[6]	SAR0 ch#2, range violation to TCPWM0 Group #1 Counter #06 trig = 4
3	PASS0_CH_RAN-GEVIO_TR_OUT[3]	TCPWM0_16M_ONE_CNT_TR_IN[9]	SAR0 ch#3, range violation to TCPWM0 Group #1 Counter #09 trig = 4
4	PASS0_CH_RAN-GEVIO_TR_OUT[4]	TCPWM0_16_ONE_CNT_TR_IN[0]	SAR0 ch#4, range violation to TCPWM0 Group #0 Counter #00 trig = 4
5	PASS0_CH_RAN-GEVIO_TR_OUT[5]	TCPWM0_16_ONE_CNT_TR_IN[1]	SAR0 ch#5, range violation to TCPWM0 Group #0 Counter #01 trig = 4
6	PASS0_CH_RAN-GEVIO_TR_OUT[6]	TCPWM0_16_ONE_CNT_TR_IN[2]	SAR0 ch#6, range violation to TCPWM0 Group #0 Counter #02 trig = 4
7	PASS0_CH_RAN-GEVIO_TR_OUT[7]	TCPWM0_16_ONE_CNT_TR_IN[3]	SAR0 ch#7, range violation to TCPWM0 Group #0 Counter #03 trig = 4

Note

36. Each logical channel of SAR ADC[x] can be connected to any of the SAR ADC[x]_y external pin. (x = 0, or 1, or, 2 and y=0 to 31).

Table 23 One-to-one triggers *(continued)*

Input	Trigger In	Trigger Out	Description
8	PASS0_CH_RAN-GEVIO_TR_OUT[8]	TCPWM0_16_ONE_CNT_TR_IN[4]	SAR0 ch#8, range violation to TCPWM0 Group #0 Counter #04 trig = 4
9	PASS0_CH_RAN-GEVIO_TR_OUT[9]	TCPWM0_16_ONE_CNT_TR_IN[5]	SAR0 ch#9, range violation to TCPWM0 Group #0 Counter #05 trig = 4
10	PASS0_CH_RAN-GEVIO_TR_OUT[10]	TCPWM0_16_ONE_CNT_TR_IN[6]	SAR0 ch#10, range violation to TCPWM0 Group #0 Counter #06 trig = 4
11	PASS0_CH_RAN-GEVIO_TR_OUT[11]	TCPWM0_16_ONE_CNT_TR_IN[7]	SAR0 ch#11, range violation to TCPWM0 Group #0 Counter #07 trig = 4
12	PASS0_CH_RAN-GEVIO_TR_OUT[12]	TCPWM0_16_ONE_CNT_TR_IN[8]	SAR0 ch#12, range violation to TCPWM0 Group #0 Counter #08 trig = 4
13	PASS0_CH_RAN-GEVIO_TR_OUT[13]	TCPWM0_16_ONE_CNT_TR_IN[9]	SAR0 ch#13, range violation to TCPWM0 Group #0 Counter #09 trig = 4
14	PASS0_CH_RAN-GEVIO_TR_OUT[14]	TCPWM0_16_ONE_CNT_TR_IN[10]	SAR0 ch#14, range violation to TCPWM0 Group #0 Counter #10 trig = 4
15	PASS0_CH_RAN-GEVIO_TR_OUT[15]	TCPWM0_16_ONE_CNT_TR_IN[11]	SAR0 ch#15, range violation to TCPWM0 Group #0 Counter #11 trig = 4
16	PASS0_CH_RAN-GEVIO_TR_OUT[16]	TCPWM0_16_ONE_CNT_TR_IN[12]	SAR0 ch#16, range violation to TCPWM0 Group #0 Counter #12 trig = 4
17	PASS0_CH_RAN-GEVIO_TR_OUT[17]	TCPWM0_16_ONE_CNT_TR_IN[13]	SAR0 ch#17, range violation to TCPWM0 Group #0 Counter #13 trig = 4
18	PASS0_CH_RAN-GEVIO_TR_OUT[18]	TCPWM0_16_ONE_CNT_TR_IN[14]	SAR0 ch#18, range violation to TCPWM0 Group #0 Counter #14 trig = 4
19	PASS0_CH_RAN-GEVIO_TR_OUT[19]	TCPWM0_16_ONE_CNT_TR_IN[15]	SAR0 ch#19, range violation to TCPWM0 Group #0 Counter #15 trig = 4
20	PASS0_CH_RAN-GEVIO_TR_OUT[20]	TCPWM0_16_ONE_CNT_TR_IN[16]	SAR0 ch#20, range violation to TCPWM0 Group #0 Counter #16 trig = 4
21	PASS0_CH_RAN-GEVIO_TR_OUT[21]	TCPWM0_16_ONE_CNT_TR_IN[17]	SAR0 ch#21, range violation to TCPWM0 Group #0 Counter #17 trig = 4
22	PASS0_CH_RAN-GEVIO_TR_OUT[22]	TCPWM0_16_ONE_CNT_TR_IN[18]	SAR0 ch#22, range violation to TCPWM0 Group #0 Counter #18 trig = 4
23	PASS0_CH_RAN-GEVIO_TR_OUT[23]	TCPWM0_16_ONE_CNT_TR_IN[19]	SAR0 ch#23, range violation to TCPWM0 Group #0 Counter #19 trig = 4
24	PASS0_CH_RAN-GEVIO_TR_OUT[24]	TCPWM0_16_ONE_CNT_TR_IN[20]	SAR0 ch#24, range violation to TCPWM0 Group #0 Counter #20 trig = 4
25	PASS0_CH_RAN-GEVIO_TR_OUT[25]	TCPWM0_16_ONE_CNT_TR_IN[21]	SAR0 ch#25, range violation to TCPWM0 Group #0 Counter #21 trig = 4
26	PASS0_CH_RAN-GEVIO_TR_OUT[26]	TCPWM0_16_ONE_CNT_TR_IN[22]	SAR0 ch#26, range violation to TCPWM0 Group #0 Counter #22 trig = 4
27	PASS0_CH_RAN-GEVIO_TR_OUT[27]	TCPWM0_16_ONE_CNT_TR_IN[23]	SAR0 ch#27, range violation to TCPWM0 Group #0 Counter #23 trig = 4
28	PASS0_CH_RAN-GEVIO_TR_OUT[28]	TCPWM0_16_ONE_CNT_TR_IN[24]	SAR0 ch#28, range violation to TCPWM0 Group #0 Counter #24 trig = 4
29	PASS0_CH_RAN-GEVIO_TR_OUT[29]	TCPWM0_16_ONE_CNT_TR_IN[25]	SAR0 ch#29, range violation to TCPWM0 Group #0 Counter #25 trig = 4
30	PASS0_CH_RAN-GEVIO_TR_OUT[30]	TCPWM0_16_ONE_CNT_TR_IN[26]	SAR0 ch#30, range violation to TCPWM0 Group #0 Counter #26 trig = 4
31	PASS0_CH_RAN-GEVIO_TR_OUT[31]	TCPWM0_16_ONE_CNT_TR_IN[27]	SAR0 ch#31, range violation to TCPWM0 Group #0 Counter #27 trig = 4
32	PASS0_CH_RAN-GEVIO_TR_OUT[32]	TCPWM0_16M_ONE_CNT_TR_IN[1]	SAR1 ch#0, range violation to TCPWM0 Group #1 Counter #01 trig = 4

Note
36. Each logical channel of SAR ADC[x] can be connected to any of the SAR ADC[x]_y external pin. (x = 0, or 1, or, 2 and y=0 to 31).

Table 23 One-to-one triggers *(continued)*

Input	Trigger In	Trigger Out	Description
33	PASS0_CH_RAN-GEVIO_TR_OUT[33]	TCPWM0_16M_ONE_CNT_TR_IN[4]	SAR1 ch#1, range violation to TCPWM0 Group #1 Counter #04 trig = 4
34	PASS0_CH_RAN-GEVIO_TR_OUT[34]	TCPWM0_16M_ONE_CNT_TR_IN[7]	SAR1 ch#2, range violation to TCPWM0 Group #1 Counter #07 trig = 4
35	PASS0_CH_RAN-GEVIO_TR_OUT[35]	TCPWM0_16M_ONE_CNT_TR_IN[10]	SAR1 ch#3, range violation to TCPWM0 Group #1 Counter #10 trig = 4
36	PASS0_CH_RAN-GEVIO_TR_OUT[36]	TCPWM0_16_ONE_CNT_TR_IN[28]	SAR1 ch#4, range violation to TCPWM0 Group #0 Counter #28 trig = 4
37	PASS0_CH_RAN-GEVIO_TR_OUT[37]	TCPWM0_16_ONE_CNT_TR_IN[29]	SAR1 ch#5, range violation to TCPWM0 Group #0 Counter #29 trig = 4
38	PASS0_CH_RAN-GEVIO_TR_OUT[38]	TCPWM0_16_ONE_CNT_TR_IN[30]	SAR1 ch#6, range violation to TCPWM0 Group #0 Counter #30 trig = 4
39	PASS0_CH_RAN-GEVIO_TR_OUT[39]	TCPWM0_16_ONE_CNT_TR_IN[31]	SAR1 ch#7, range violation to TCPWM0 Group #0 Counter #31 trig = 4
40	PASS0_CH_RAN-GEVIO_TR_OUT[40]	TCPWM0_16_ONE_CNT_TR_IN[32]	SAR1 ch#8, range violation to TCPWM0 Group #0 Counter #32 trig = 4
41	PASS0_CH_RAN-GEVIO_TR_OUT[41]	TCPWM0_16_ONE_CNT_TR_IN[33]	SAR1 ch#9, range violation to TCPWM0 Group #0 Counter #33 trig = 4
42	PASS0_CH_RAN-GEVIO_TR_OUT[42]	TCPWM0_16_ONE_CNT_TR_IN[34]	SAR1 ch#10, range violation to TCPWM0 Group #0 Counter #34 trig = 4
43	PASS0_CH_RAN-GEVIO_TR_OUT[43]	TCPWM0_16_ONE_CNT_TR_IN[35]	SAR1 ch#11, range violation to TCPWM0 Group #0 Counter #35 trig = 4
44	PASS0_CH_RAN-GEVIO_TR_OUT[44]	TCPWM0_16_ONE_CNT_TR_IN[36]	SAR1 ch#12, range violation to TCPWM0 Group #0 Counter #36 trig = 4
45	PASS0_CH_RAN-GEVIO_TR_OUT[45]	TCPWM0_16_ONE_CNT_TR_IN[37]	SAR1 ch#13, range violation to TCPWM0 Group #0 Counter #37 trig = 4
46	PASS0_CH_RAN-GEVIO_TR_OUT[46]	TCPWM0_16_ONE_CNT_TR_IN[38]	SAR1 ch#14, range violation to TCPWM0 Group #0 Counter #38 trig = 4
47	PASS0_CH_RAN-GEVIO_TR_OUT[47]	TCPWM0_16_ONE_CNT_TR_IN[39]	SAR1 ch#15, range violation to TCPWM0 Group #0 Counter #39 trig = 4
48	PASS0_CH_RAN-GEVIO_TR_OUT[48]	TCPWM0_16_ONE_CNT_TR_IN[40]	SAR1 ch#16, range violation to TCPWM0 Group #0 Counter #40 trig = 4
49	PASS0_CH_RAN-GEVIO_TR_OUT[49]	TCPWM0_16_ONE_CNT_TR_IN[41]	SAR1 ch#17, range violation to TCPWM0 Group #0 Counter #41 trig = 4
50	PASS0_CH_RAN-GEVIO_TR_OUT[50]	TCPWM0_16_ONE_CNT_TR_IN[42]	SAR1 ch#18, range violation to TCPWM0 Group #0 Counter #42 trig = 4
51	PASS0_CH_RAN-GEVIO_TR_OUT[51]	TCPWM0_16_ONE_CNT_TR_IN[43]	SAR1 ch#19, range violation to TCPWM0 Group #0 Counter #43 trig = 4
52	PASS0_CH_RAN-GEVIO_TR_OUT[52]	TCPWM0_16_ONE_CNT_TR_IN[44]	SAR1 ch#20, range violation to TCPWM0 Group #0 Counter #44 trig = 4
53	PASS0_CH_RAN-GEVIO_TR_OUT[53]	TCPWM0_16_ONE_CNT_TR_IN[45]	SAR1 ch#21, range violation to TCPWM0 Group #0 Counter #45 trig = 4
54	PASS0_CH_RAN-GEVIO_TR_OUT[54]	TCPWM0_16_ONE_CNT_TR_IN[46]	SAR1 ch#22, range violation to TCPWM0 Group #0 Counter #46 trig = 4
55	PASS0_CH_RAN-GEVIO_TR_OUT[55]	TCPWM0_16_ONE_CNT_TR_IN[47]	SAR1 ch#23, range violation to TCPWM0 Group #0 Counter #47 trig =4
56	PASS0_CH_RAN-GEVIO_TR_OUT[56]	TCPWM0_16_ONE_CNT_TR_IN[48]	SAR1 ch#24, range violation to TCPWM0 Group #0 Counter #48 trig = 4
57	PASS0_CH_RAN-GEVIO_TR_OUT[57]	TCPWM0_16_ONE_CNT_TR_IN[49]	SAR1 ch#25, range violation to TCPWM0 Group #0 Counter #49 trig = 4

Note
36. Each logical channel of SAR ADC[x] can be connected to any of the SAR ADC[x]_y external pin. (x = 0, or 1, or, 2 and y=0 to 31).

Table 23 One-to-one triggers *(continued)*

Input	Trigger In	Trigger Out	Description
58	PASS0_CH_RAN-GEVIO_TR_OUT[58]	TCPWM0_16_ONE_CNT_TR_IN[50]	SAR1 ch#26, range violation to TCPWM0 Group #0 Counter #50 trig = 4
59	PASS0_CH_RAN-GEVIO_TR_OUT[59]	TCPWM0_16_ONE_CNT_TR_IN[51]	SAR1 ch#27, range violation to TCPWM0 Group #0 Counter #51 trig = 4
60	PASS0_CH_RAN-GEVIO_TR_OUT[60]	TCPWM0_16_ONE_CNT_TR_IN[52]	SAR1 ch#28, range violation to TCPWM0 Group #0 Counter #52 trig = 4
61	PASS0_CH_RAN-GEVIO_TR_OUT[61]	TCPWM0_16_ONE_CNT_TR_IN[53]	SAR1 ch#29, range violation to TCPWM0 Group #0 Counter #53 trig = 4
62	PASS0_CH_RAN-GEVIO_TR_OUT[62]	TCPWM0_16_ONE_CNT_TR_IN[54]	SAR1 ch#30, range violation to TCPWM0 Group #0 Counter #54 trig = 4
63	PASS0_CH_RAN-GEVIO_TR_OUT[63]	TCPWM0_16_ONE_CNT_TR_IN[55]	SAR1 ch#31, range violation to TCPWM0 Group #0 Counter #55 trig = 4
64	PASS0_CH_RAN-GEVIO_TR_OUT[64]	TCPWM0_16M_ONE_CNT_TR_IN[2]	SAR2 ch#0, range violation to TCPWM0 Group #1 Counter #02 trig = 4
65	PASS0_CH_RAN-GEVIO_TR_OUT[65]	TCPWM0_16M_ONE_CNT_TR_IN[5]	SAR2 ch#1, range violation to TCPWM0 Group #1 Counter #05 trig = 4
66	PASS0_CH_RAN-GEVIO_TR_OUT[66]	TCPWM0_16M_ONE_CNT_TR_IN[8]	SAR2 ch#2, range violation to TCPWM0 Group #1 Counter #08 trig = 4
67	PASS0_CH_RAN-GEVIO_TR_OUT[67]	TCPWM0_16M_ONE_CNT_TR_IN[11]	SAR2 ch#3, range violation to TCPWM0 Group #1 Counter #11 trig =4
68	PASS0_CH_RAN-GEVIO_TR_OUT[68]	TCPWM0_16_ONE_CNT_TR_IN[56]	SAR2 ch#4, range violation to TCPWM0 Group #0 Counter #56 trig = 4
69	PASS0_CH_RAN-GEVIO_TR_OUT[69]	TCPWM0_16_ONE_CNT_TR_IN[57]	SAR2 ch#5, range violation to TCPWM0 Group #0 Counter #57 trig = 4
70	PASS0_CH_RAN-GEVIO_TR_OUT[70]	TCPWM0_16_ONE_CNT_TR_IN[58]	SAR2 ch#6, range violation to TCPWM0 Group #0 Counter #58 trig = 4
71	PASS0_CH_RAN-GEVIO_TR_OUT[71]	TCPWM0_16_ONE_CNT_TR_IN[59]	SAR2 ch#7, range violation to TCPWM0 Group #0 Counter #59 trig = 4
MUX Group 7: TCPWM0 to PASS SARx			
0	TCPWM0_16M_TR_OUT1[0]	PASS0_CH_TR_IN[0]	TCPWM0 Group #1 Counter #00 (PWM0_M_0) to SAR0 ch#0
1	TCPWM0_16M_TR_OUT1[3]	PASS0_CH_TR_IN[1]	TCPWM0 Group #1 Counter #03 (PWM0_M_3) to SAR0 ch#1
2	TCPWM0_16M_TR_OUT1[6]	PASS0_CH_TR_IN[2]	TCPWM0 Group #1 Counter #06 (PWM0_M_6) to SAR0 ch#2
3	TCPWM0_16M_TR_OUT1[9]	PASS0_CH_TR_IN[3]	TCPWM0 Group #1 Counter #09 (PWM0_M_9) to SAR0 ch#3
4:31	TCPWM0_16_TR_OUT1[0:27]	PASS0_CH_TR_IN[4:31]	TCPWM0 Group #0 Counter #00 through 27 (PWM0_0 to PWM0_27) to SAR0 ch#4 through SAR0 ch#31
32	TCPWM0_16M_TR_OUT1[1]	PASS0_CH_TR_IN[32]	TCPWM0 Group #1 Counter #01 (PWM0_M_1) to SAR1 ch#0
33	TCPWM0_16M_TR_OUT1[4]	PASS0_CH_TR_IN[33]	TCPWM0 Group #1 Counter #04 (PWM0_M_4) to SAR1 ch#1
34	TCPWM0_16M_TR_OUT1[7]	PASS0_CH_TR_IN[34]	TCPWM0 Group #1 Counter #07 (PWM0_M_7) to SAR1 ch#2
35	TCPWM0_16M_TR_OUT1[10]	PASS0_CH_TR_IN[35]	TCPWM0 Group #1 Counter #10 (PWM0_M_10) to SAR1 ch#3

Note
36. Each logical channel of SAR ADC[x] can be connected to any of the SAR ADC[x]_y external pin. (x = 0, or 1, or, 2 and y=0 to 31).

Table 23 One-to-one triggers *(continued)*

Input	Trigger In	Trigger Out	Description
36:63	TCPWM0_16_TR_OUT1[28:55]	PASS0_CH_TR_IN[36:63]	TCPWM0 Group #0 Counter #28 through 55 (PWM0_28 to PWM0_55) to SAR1 ch#4 through SAR1 ch#31
64	TCPWM0_16M_TR_OUT1[2]	PASS0_CH_TR_IN[64]	TCPWM0 Group #1 Counter #02 (PWM0_M_2) to SAR2 ch#0
65	TCPWM0_16M_TR_OUT1[5]	PASS0_CH_TR_IN[65]	TCPWM0 Group #1 Counter #05 (PWM0_M_5) to SAR2 ch#1
66	TCPWM0_16M_TR_OUT1[8]	PASS0_CH_TR_IN[66]	TCPWM0 Group #1 Counter #08 (PWM0_M_8) to SAR2 ch#2
67	TCPWM0_16M_TR_OUT1[11]	PASS0_CH_TR_IN[67]	TCPWM0 Group #1 Counter #11 (PWM0_M_11) to SAR2 ch#3
68:71	TCPWM0_16_TR_OUT1[56:59]	PASS0_CH_TR_IN[68:71]	TCPWM0 Group #1 Counter #56 through 59 (PWM0_56 to PWM0_59) to SAR2 ch#4 through SAR2 ch#7
MUX Group 8: Acknowledge triggers from P-DMA1 to CAN1			
0	PDMA1_TR_OUT[38]	CAN1_DBG_TR_ACK[0]	CAN1 Channel#0 P-DMA1 acknowledge
1	PDMA1_TR_OUT[41]	CAN1_DBG_TR_ACK[1]	CAN1 Channel#1 P-DMA1 acknowledge
2	PDMA1_TR_OUT[44]	CAN1_DBG_TR_ACK[2]	CAN1 Channel#2 P-DMA1 acknowledge
3	PDMA1_TR_OUT[47]	CAN1_DBG_TR_ACK[3]	CAN1 Channel#3 P-DMA1 acknowledge
MUX Group 9: Acknowledge triggers from P-DMA0 to CAN0			
0	PDMA0_TR_OUT[32]	CAN0_DBG_TR_ACK[0]	CAN0 Channel#0 P-DMA0 acknowledge
1	PDMA0_TR_OUT[35]	CAN0_DBG_TR_ACK[1]	CAN0 Channel#1 P-DMA0 acknowledge
2	PDMA0_TR_OUT[38]	CAN0_DBG_TR_ACK[2]	CAN0 Channel#2 P-DMA0 acknowledge
3	PDMA0_TR_OUT[41]	CAN0_DBG_TR_ACK[3]	CAN0 Channel#3 P-DMA0 acknowledge

Note
36. Each logical channel of SAR ADC[x] can be connected to any of the SAR ADC[x]_y external pin. (x = 0, or 1, or, 2 and y=0 to 31).

20 Peripheral clocks

Table 24 Peripheral clock assignments

Output	Destination	Description
CPUSS Root Clocks (Group 0)		
0	PCLK_CPUSS_CLOCK_TRACE_IN	Trace clock
1	PCLK_SMARTIO12_CLOCK	Smart I/O #12
2	PCLK_SMARTIO13_CLOCK	Smart I/O #13
3	PCLK_SMARTIO14_CLOCK	Smart I/O #14
4	PCLK_SMARTIO15_CLOCK	Smart I/O #15
5	PCLK_SMARTIO17_CLOCK	Smart I/O #17
COMM Root Clocks (Group 1)		
0	PCLK_CANFD0_CLOCK_CAN0	CAN0, Channel #0
1	PCLK_CANFD0_CLOCK_CAN1	CAN0, Channel #1
2	PCLK_CANFD0_CLOCK_CAN2	CAN0, Channel #2
3	PCLK_CANFD0_CLOCK_CAN3	CAN0, Channel #3
4	PCLK_CANFD1_CLOCK_CAN0	CAN1, Channel #0
5	PCLK_CANFD1_CLOCK_CAN1	CAN1, Channel #1
6	PCLK_CANFD1_CLOCK_CAN2	CAN1, Channel #2
7	PCLK_CANFD1_CLOCK_CAN3	CAN1, Channel #3
8 - 23	Reserve	Reserved for future use
24	PCLK_SCB0_CLOCK	SCB0
25	PCLK_SCB1_CLOCK	SCB1
26	PCLK_SCB2_CLOCK	SCB2
27	PCLK_SCB3_CLOCK	SCB3
28	PCLK_SCB4_CLOCK	SCB4
29	PCLK_SCB5_CLOCK	SCB5
30	PCLK_SCB6_CLOCK	SCB6
31	PCLK_SCB7_CLOCK	SCB7
32	PCLK_SCB8_CLOCK	SCB8
33	PCLK_SCB9_CLOCK	SCB9
34	PCLK_SCB10_CLOCK	SCB10
35	PCLK_PASS0_CLOCK_SAR0	SAR0
36	PCLK_PASS0_CLOCK_SAR1	SAR1
37	PCLK_PASS0_CLOCK_SAR2	SAR2
38	PCLK_TCPWM0_CLOCKS0	TCPWM0 Group #0, Counter #0
39	PCLK_TCPWM0_CLOCKS1	TCPWM0 Group #0, Counter #1
40	PCLK_TCPWM0_CLOCKS2	TCPWM0 Group #0, Counter #2
41	PCLK_TCPWM0_CLOCKS3	TCPWM0 Group #0, Counter #3
42	PCLK_TCPWM0_CLOCKS4	TCPWM0 Group #0, Counter #4
43	PCLK_TCPWM0_CLOCKS5	TCPWM0 Group #0, Counter #5
44	PCLK_TCPWM0_CLOCKS6	TCPWM0 Group #0, Counter #6
45	PCLK_TCPWM0_CLOCKS7	TCPWM0 Group #0, Counter #7
46	PCLK_TCPWM0_CLOCKS8	TCPWM0 Group #0, Counter #8
47	PCLK_TCPWM0_CLOCKS9	TCPWM0 Group #0, Counter #9
48	PCLK_TCPWM0_CLOCKS10	TCPWM0 Group #0, Counter #10

Table 24 Peripheral clock assignments *(continued)*

Output	Destination	Description
49	PCLK_TCPWM0_CLOCKS11	TCPWM0 Group #0, Counter #11
50	PCLK_TCPWM0_CLOCKS12	TCPWM0 Group #0, Counter #12
51	PCLK_TCPWM0_CLOCKS13	TCPWM0 Group #0, Counter #13
52	PCLK_TCPWM0_CLOCKS14	TCPWM0 Group #0, Counter #14
53	PCLK_TCPWM0_CLOCKS15	TCPWM0 Group #0, Counter #15
54	PCLK_TCPWM0_CLOCKS16	TCPWM0 Group #0, Counter #16
55	PCLK_TCPWM0_CLOCKS17	TCPWM0 Group #0, Counter #17
56	PCLK_TCPWM0_CLOCKS18	TCPWM0 Group #0, Counter #18
57	PCLK_TCPWM0_CLOCKS19	TCPWM0 Group #0, Counter #19
58	PCLK_TCPWM0_CLOCKS20	TCPWM0 Group #0, Counter #20
59	PCLK_TCPWM0_CLOCKS21	TCPWM0 Group #0, Counter #21
60	PCLK_TCPWM0_CLOCKS22	TCPWM0 Group #0, Counter #22
61	PCLK_TCPWM0_CLOCKS23	TCPWM0 Group #0, Counter #23
62	PCLK_TCPWM0_CLOCKS24	TCPWM0 Group #0, Counter #24
63	PCLK_TCPWM0_CLOCKS25	TCPWM0 Group #0, Counter #25
64	PCLK_TCPWM0_CLOCKS26	TCPWM0 Group #0, Counter #26
65	PCLK_TCPWM0_CLOCKS27	TCPWM0 Group #0, Counter #27
66	PCLK_TCPWM0_CLOCKS28	TCPWM0 Group #0, Counter #28
67	PCLK_TCPWM0_CLOCKS29	TCPWM0 Group #0, Counter #29
68	PCLK_TCPWM0_CLOCKS30	TCPWM0 Group #0, Counter #30
69	PCLK_TCPWM0_CLOCKS31	TCPWM0 Group #0, Counter #31
70	PCLK_TCPWM0_CLOCKS32	TCPWM0 Group #0, Counter #32
71	PCLK_TCPWM0_CLOCKS33	TCPWM0 Group #0, Counter #33
72	PCLK_TCPWM0_CLOCKS34	TCPWM0 Group #0, Counter #34
73	PCLK_TCPWM0_CLOCKS35	TCPWM0 Group #0, Counter #35
74	PCLK_TCPWM0_CLOCKS36	TCPWM0 Group #0, Counter #36
75	PCLK_TCPWM0_CLOCKS37	TCPWM0 Group #0, Counter #37
76	PCLK_TCPWM0_CLOCKS38	TCPWM0 Group #0, Counter #38
77	PCLK_TCPWM0_CLOCKS39	TCPWM0 Group #0, Counter #39
78	PCLK_TCPWM0_CLOCKS40	TCPWM0 Group #0, Counter #40
79	PCLK_TCPWM0_CLOCKS41	TCPWM0 Group #0, Counter #41
80	PCLK_TCPWM0_CLOCKS42	TCPWM0 Group #0, Counter #42
81	PCLK_TCPWM0_CLOCKS43	TCPWM0 Group #0, Counter #43
82	PCLK_TCPWM0_CLOCKS44	TCPWM0 Group #0, Counter #44
83	PCLK_TCPWM0_CLOCKS45	TCPWM0 Group #0, Counter #45
84	PCLK_TCPWM0_CLOCKS46	TCPWM0 Group #0, Counter #46
85	PCLK_TCPWM0_CLOCKS47	TCPWM0 Group #0, Counter #47
86	PCLK_TCPWM0_CLOCKS48	TCPWM0 Group #0, Counter #48
87	PCLK_TCPWM0_CLOCKS49	TCPWM0 Group #0, Counter #49
88	PCLK_TCPWM0_CLOCKS50	TCPWM0 Group #0, Counter #50
89	PCLK_TCPWM0_CLOCKS51	TCPWM0 Group #0, Counter #51
90	PCLK_TCPWM0_CLOCKS52	TCPWM0 Group #0, Counter #52
91	PCLK_TCPWM0_CLOCKS53	TCPWM0 Group #0, Counter #53
92	PCLK_TCPWM0_CLOCKS54	TCPWM0 Group #0, Counter #54

Table 24 Peripheral clock assignments *(continued)*

Output	Destination	Description
93	PCLK_TCPWM0_CLOCKS55	TCPWM0 Group #0, Counter #55
94	PCLK_TCPWM0_CLOCKS56	TCPWM0 Group #0, Counter #56
95	PCLK_TCPWM0_CLOCKS57	TCPWM0 Group #0, Counter #57
96	PCLK_TCPWM0_CLOCKS58	TCPWM0 Group #0, Counter #58
97	PCLK_TCPWM0_CLOCKS59	TCPWM0 Group #0, Counter #59
98	PCLK_TCPWM0_CLOCKS60	TCPWM0 Group #0, Counter #60
99	PCLK_TCPWM0_CLOCKS61	TCPWM0 Group #0, Counter #61
100	PCLK_TCPWM0_CLOCKS62	TCPWM0 Group #0, Counter #62
101	PCLK_TCPWM0_CLOCKS256	TCPWM0 Group #1, Counter #0
102	PCLK_TCPWM0_CLOCKS257	TCPWM0 Group #1, Counter #1
103	PCLK_TCPWM0_CLOCKS258	TCPWM0 Group #1, Counter #2
104	PCLK_TCPWM0_CLOCKS259	TCPWM0 Group #1, Counter #3
105	PCLK_TCPWM0_CLOCKS260	TCPWM0 Group #1, Counter #4
106	PCLK_TCPWM0_CLOCKS261	TCPWM0 Group #1, Counter #5
107	PCLK_TCPWM0_CLOCKS262	TCPWM0 Group #1, Counter #6
108	PCLK_TCPWM0_CLOCKS263	TCPWM0 Group #1, Counter #7
109	PCLK_TCPWM0_CLOCKS264	TCPWM0 Group #1, Counter #8
110	PCLK_TCPWM0_CLOCKS265	TCPWM0 Group #1, Counter #9
111	PCLK_TCPWM0_CLOCKS266	TCPWM0 Group #1, Counter #10
112	PCLK_TCPWM0_CLOCKS267	TCPWM0 Group #1, Counter #11
113	PCLK_TCPWM0_CLOCKS512	TCPWM0 Group #2, Counter #0
114	PCLK_TCPWM0_CLOCKS513	TCPWM0 Group #2, Counter #1
115	PCLK_TCPWM0_CLOCKS514	TCPWM0 Group #2, Counter #2
116	PCLK_TCPWM0_CLOCKS515	TCPWM0 Group #2, Counter #3
117	PCLK_TCPWM0_CLOCKS516	TCPWM0 Group #2, Counter #4
118	PCLK_TCPWM0_CLOCKS517	TCPWM0 Group #2, Counter #5
119	PCLK_TCPWM0_CLOCKS518	TCPWM0 Group #2, Counter #6
120	PCLK_TCPWM0_CLOCKS519	TCPWM0 Group #2, Counter #7

21 Faults

Table 25 Fault assignments (Preliminary)

Fault	Source	Description
0	CPUSS_MPU_VIO_0	CM0+ SMPU violation DATA0[31:0]: Violating address DATA1[0]: User read DATA1[1]: User write DATA1[2]: User execute DATA1[3]: Privileged read DATA1[4]: Privileged write DATA1[5]: Privileged execute DATA1[6]: Non-secure DATA1[11:8]: Master identifier DATA1[15:12]: Protection context identifier DATA1[31]: '0' MPU violation; '1': SMPU violation
1	CPUSS_MPU_VIO_1	CRYPTO SMPU violation. See CPUSS_MPU_VIO_0 description
2	CPUSS_MPU_VIO_2	P-DMA0 MPU/SMPU violation. See CPUSS_MPU_VIO_0 description
3	CPUSS_MPU_VIO_3	P-DMA1 MPU/SMPU violation. See CPUSS_MPU_VIO_0 description
4	CPUSS_MPU_VIO_4	M-DMA0 MPU/SMPU violation. See CPUSS_MPU_VIO_0 description
5	CPUSS_MPU_VIO_5	SDHC MPU/SMPU violation. See CPUSS_MPU_VIO_0 description
9	CPUSS_MPU_VIO_6	Ethernet0 MPU/SMPU violation. See CPUSS_MPU_VIO_0 description
13	CPUSS_MPU_VIO_13	CM7_1 MPU/SMPU violation. See CPUSS_MPU_VIO_0 description
14	CPUSS_MPU_VIO_14	CM7_0 MPU/SMPU violation. See CPUSS_MPU_VIO_0 description
15	CPUSS_MPU_VIO_15	Test Controller MPU/SMPU violation. See CPUSS_MPU_VIO_0 description.
16	CPUSS_CM7_1_TCM_C_ECC	Correctable ECC error in CM7_1 TCM memory DATA0[23:2]: Violating address DATA1[7:0]: Syndrome of code word (at address offset 0x0) DATA1[31:30]: 0= ITCM, 2=D0TCM, 3=D1TCM
17	CPUSS_CM7_1_TCM_NC_ECC	Non Correctable ECC error in CM7_1 TCM memory. See CPUSS_CM7_1_TCM_C_ECC description.
18	CPUSS_CM7_0_CACHE_C_ECC	Correctable ECC error in CM7_0 Cache memories DATA0[16:2]: location information: Tag/Data SRAM, Way, Index and line Offset, see CM7 UGRM IEBR0/DEBR0 description for details. DATA0[31]: 0=Instruction cache, 1= Data cache
19	CPUSS_CM7_0_CACHE_NC_ECC	Non Correctable ECC error in CM7_0 Cache memories. See CPUSS_CM7_0_CACHE_C_ECC description.
20	CPUSS_CM7_1_CACHE_C_ECC	Correctable ECC error in CM7_1 Cache memories. See CPUSS_CM7_0_CACHE_C_ECC description.
21	CPUSS_CM7_1_CACHE_NC_ECC	Non Correctable ECC error in CM7_1 Cache memories. See CPUSS_CM7_0_CACHE_C_ECC description.
25	PERI_MS_VIO_4	P-DMA1 Peripheral Master Interface PPU violation. See PERI_MS_VIO_0 description.
26	PERI_PERI_C_ECC	Peripheral protection SRAM correctable ECC violation DATA0[10:0]: Violating address. DATA1[7:0]: Syndrome of SRAM word.
27	PERI_PERI_NC_ECC	Peripheral protection SRAM non-correctable ECC violation

Table 25 Fault assignments (Preliminary) *(continued)*

Fault	Source	Description
28	PERI_MS_VIO_0	CM0+ Peripheral Master Interface PPU violation DATA0[31:0]: Violating address DATA1[0]: User read DATA1[1]: User write DATA1[2]: User execute DATA1[3]: Privileged read DATA1[4]: Privileged write DATA1[5]: Privileged execute DATA1[6]: Non-secure DATA1[11:8]: Master identifier DATA1[15:12]: Protection context identifier DATA1[31:28]: “0”: master interface, PPU violation, “1': timeout detected, “2”: bus error, other: undefined.
29	PERI_MS_VIO_1	CM7_0 Peripheral Master Interface PPU violation. See PERI_MS_VIO_0 description.
30	PERI_MS_VIO_2	CM7_1 Peripheral Master Interface PPU violation. See PERI_MS_VIO_0 description.
31	PERI_MS_VIO_3	P-DMA0 Peripheral Master Interface PPU_3 violation. See PERI_MS_VIO_0 description.
32	PERI_GROUP_VIO_0	Peripheral Group #0 violation DATA0[31:0]: Violating address DATA1[0]: User read DATA1[1]: User write DATA1[2]: User execute DATA1[3]: Privileged read DATA1[4]: Privileged write DATA1[5]: Privileged execute DATA1[6]: Non-secure DATA1[11:8]: Master identifier DATA1[15:12]: Protection context identifier DATA1[31:28]: “0”: decoder or peripheral bus error, other: undefined
33	PERI_GROUP_VIO_1	Peripheral Group #1 violation. See PERI_GROUP_VIO_0 description
34	PERI_GROUP_VIO_2	Peripheral Group #2 violation. See PERI_GROUP_VIO_0 description
35	PERI_GROUP_VIO_3	Peripheral Group #3 violation. See PERI_GROUP_VIO_0 description
36	PERI_GROUP_VIO_4	Peripheral Group #4 violation. See PERI_GROUP_VIO_0 description
37	PERI_GROUP_VIO_5	Peripheral Group #5 violation. See PERI_GROUP_VIO_0 description
38	PERI_GROUP_VIO_6	Peripheral Group #6 violation. See PERI_GROUP_VIO_0 description
40	PERI_GROUP_VIO_8	Peripheral Group #8 violation. See PERI_GROUP_VIO_0 description
41	PERI_GROUP_VIO_9	Peripheral Group #9 violation. See PERI_GROUP_VIO_0 description
48	CPUSS_FLASHC_MAIN_BUS_ERR	Flash controller main flash bus error FAULT_DATA0[26:0]: Violating address. Append 5'b00010 as most significant bits to derive 32-bit system address FAULT_DATA1[11:8]: Master identifier

Table 25 Fault assignments (Preliminary) *(continued)*

Fault	Source	Description
49	CPUSS_FLASHC_MAIN_C_ECC	Flash controller main flash correctable ECC violation DATA[26:0]: Violating address. Append 5'b00010 as most significant bits to derive 32-bit system address. DATA1[7:0]: Syndrome of 64-bit word (at address offset 0x00) DATA1[15:8]: Syndrome of 64-bit word (at address offset 0x08) DATA1[23:16]: Syndrome of 64-bit word (at address offset 0x10) DATA1[31:24]: Syndrome of 64-bit word (at address offset 0x18)
50	CPUSS_FLASHC_MAIN_NC_ECC	Flash controller main flash non-correctable ECC violation. See CPUSS_FLASHC_MAIN_C_ECC description.
51	CPUSS_FLASH- C_WORK_BUS_ERR	Flash controller work-flash bus error. See CPUSS_FLASHC_MAIN_BUS_ERR description.
52	CPUSS_FLASHC_WORK_C_ECC	Flash controller work flash correctable ECC violation. DATA0[26:0]: Violating address. Append 5'b00010 as most significant bits to derive 32-bit system address. DATA1[6:0]: Syndrome of 32-bit word.
53	CPUSS_FLASHC_WORK_NC_ECC	Flash controller work-flash non-correctable ECC violation. See CPUSS_FLASHC_WORK_C_ECC description.
54	CPUSS_FLASHC_CM0_CA_C_ECC	Flash controller CM0+ cache correctable ECC violation. DATA0[26:0]: Violating address DATA1[6:0]: Syndrome of 32-bit SRAM word (at address offset 0x0) DATA1[14:8]: Syndrome of 32-bit SRAM word (at address offset 0x4) DATA1[22:16]: Syndrome of 32-bit SRAM word (at address offset 0x8) DATA1[30:24]: Syndrome of 32-bit SRAM word (at address offset 0xc)
55	CPUSS_FLASHC_CM0_- CA_NC_ECC	Flash controller CM0+ cache non-correctable ECC violation. See CPUSS_FLASHC_CM0_CA_C_ECC description.
56	CPUSS_CM7_0_TCM_C_ECC	CPU CM7_0 TCM memory correctable ECC violation. See CPUSS_CM7_1_TCM_C_ECC description.
57	CPUSS_CM7_0_TCM_NC_ECC	CPU CM7_0 TCM memory non-correctable ECC violation. See CPUSS_CM7_1_TCM_C_ECC description.
58	CPUSS_RAMC0_C_ECC	System memory controller 0 correctable ECC violation: DATA0[31:0]: Violating address DATA1[6:0]: Syndrome of 32-bit SRAM code word.
59	CPUSS_RAMC0_NC_ECC	System memory controller 0 non-correctable ECC violation. See CPUSS_RAMC0_C_ECC description.
60	CPUSS_RAMC1_C_ECC	System memory controller 1 correctable ECC violation. See CPUSS_RAMC0_C_ECC description.
61	CPUSS_RAMC1_NC_ECC	System memory controller 1 non-correctable ECC violation. See CPUSS_RAMC0_C_ECC description.
64	CPUSS_CRYPTO_C_ECC	Crypto memory correctable ECC violation. DATA0[31:0]: Violating address DATA1[6:0]: Syndrome of Least Significant 32-bit SRAM DATA1[14:8]: Syndrome of Most Significant 32-bit SRAM
65	CPUSS_CRYPTO_NC_ECC	CRYPTO memory non-correctable ECC violation. See CPUSS_CRYPTO_C_ECC description.
70	CPUSS_DW0_C_ECC	P-DMA0 memory correctable ECC violation: DATA0[11:0]: Violating DW SRAM address (word address, assuming byte addressable) DATA1[6:0]: Syndrome of 32-bit SRAM code word

Table 25 Fault assignments (Preliminary) *(continued)*

Fault	Source	Description
71	CPUSS_DW0_NC_ECC	P-DMA0 memory non-correctable ECC violation. See CPUSS_DW0_C_ECC description.
72	CPUSS_DW1_C_ECC	P-DMA1 memory correctable ECC violation. See CPUSS_DW0_C_ECC description.
73	CPUSS_DW1_NC_ECC	P-DMA1 memory non-correctable ECC violation. See CPUSS_DW0_C_ECC description.
74	CPUSS_FM_SRAM_C_ECC	Flash code storage SRAM memory correctable ECC violation: DATA0[15:0]: Address location in the eCT Flash SRAM DATA1[6:0]: Syndrome of 32-bit SRAM word
75	CPUSS_FM_SRAM_NC_ECC	Flash code storage SRAM memory non-correctable ECC violation: See CPUSS_FM_SRAMC_C_ECC description.
80	CANFD_0__CAN_C_ECC	CAN0 message buffer correctable ECC violation: DATA0[15:0]: Violating address DATA0[22:16]: ECC violating data[38:32] from MRAM DATA0[27:24]: Master ID: 0-7 = CAN channel ID within mxttcanfd cluster, 8 = AHB I/F DATA1[31:0]: ECC violating data[31:0] from MRAM
81	CANFD_0__CAN_NC_ECC	CAN0 message buffer non-correctable ECC violation: DATA0[15:0]: Violating address DATA0[22:16]: ECC violating data[38:32] from MRAM (not for Address Error) DATA0[27:24]: Master ID: 0-7 = CAN channel ID within mxttcanfd cluster, 8 = AHB I/F DATA0[30]: Write access, only possible for Address Error DATA0[31]: Address Error: a CAN channel did an MRAM access above MRAM_SIZE DATA1[31:0]: ECC violating data[31:0] from MRAM (not for Address Error)
82	CANFD_1__CAN_C_ECC	CAN1 message buffer correctable ECC violation. See CANFD_0_CAN_C_ECC description.
83	CANFD_1__CAN_NC_ECC	CAN1 message buffer non-correctable ECC violation. See CANFD_0_CAN_NC_ECC description.
90	SRSS_FAULT_CSV	Consolidated fault output for clock supervisors. Multiple CSV can detect a violation at the same time. DATA0[15:0]: CLK_HF* root CSV violation flags DATA0[24]: CLK_REF CSV violation flag (reference clock for CLK_HF CSVs) DATA0[25]: CLK_LF CSV violation flag DATA0[26]: CLK_HVILO CSV violation flag
91	SRSS_FAULT_SSV	Consolidated fault output for supply supervisors. Multiple CSV can detect a violation at the same time. DATA0[0]: BOD on VDDA DATA[1]: OVD on VDDA DATA[16]: LVD/HVD #1 DATA0[17]: LVD/HVD #2

Table 25 Fault assignments (Preliminary) *(continued)*

Fault	Source	Description
92	SRSS_FAULT_MCWDT0	Fault output for MCWDT0 (all sub-counters) Multiple counters can detect a violation at the same time. DATA0[0]: MCWDT sub counter 0 LOWER_LIMIT DATA0[1]: MCWDT sub counter 0 UPPER_LIMIT DATA0[2]: MCWDT sub counter 1 LOWER_LIMIT DATA0[3]: MCWDT sub counter 1 UPPER_LIMIT
93	SRSS_FAULT_MCWDT1	Fault output for MCWDT1 (all sub-counters). See SRSS_FAULT_MCWDT0 description.
94	SRSS_FAULT_MCWDT2	Fault output for MCWDT2 (all sub-counters). See SRSS_FAULT_MCWDT0 description.

22 Peripheral protection unit fixed structure pairs

Protection pair is a pair PPU structures, a master, and a slave structure. The master structure protects the slave structure, and the slave structure protects resources such as peripheral registers, or the peripheral itself.

Table 26 PPU fixed structure pairs

Pair No.	PPU Fixed Structure Pair	Address	Size	Description
0	PERI_MS_PPU_FX_PERI_MAIN	0x40000200	0x00000040	Peripheral Interconnect main
1	PERI_MS_PPU_FX_PERI_SECURE	0x40002000	0x00000004	Peripheral interconnect secure
2	PERI_MS_PPU_FX_PERI_GR0_GROUP	0x40004010	0x00000004	Peripheral Group #0 main
3	PERI_MS_PPU_FX_PERI_GR1_GROUP	0x40004050	0x00000004	Peripheral Group #1 main
4	PERI_MS_PPU_FX_PERI_GR2_GROUP	0x40004090	0x00000004	Peripheral Group #2 main
5	PERI_MS_PPU_FX_PERI_GR3_GROUP	0x400040C0	0x00000020	Peripheral Group #3 main
6	PERI_MS_PPU_FX_PERI_GR4_GROUP	0x40004100	0x00000020	Peripheral Group #4 main
7	PERI_MS_PPU_FX_PERI_GR5_GROUP	0x40004140	0x00000020	Peripheral Group #5 main
8	PERI_MS_PPU_FX_PERI_GR6_GROUP	0x40004180	0x00000020	Peripheral Group #6 main
9	PERI_MS_PPU_FX_PERI_GR8_GROUP	0x40004200	0x00000020	Peripheral Group #8 main
10	PERI_MS_PPU_FX_PERI_GR9_GROUP	0x40004240	0x00000020	Peripheral Group #9 main
11	PERI_MS_PPU_FX_PERI_GR0_BOOT	0x40004020	0x00000004	Peripheral Group #0 boot
12	PERI_MS_PPU_FX_PERI_GR1_BOOT	0x40004060	0x00000004	Peripheral Group #1 boot
13	PERI_MS_PPU_FX_PERI_GR2_BOOT	0x400040A0	0x00000004	Peripheral Group #2 boot
14	PERI_MS_PPU_FX_PERI_GR3_BOOT	0x400040E0	0x00000004	Peripheral Group #3 boot
15	PERI_MS_PPU_FX_PERI_GR4_BOOT	0x40004120	0x00000004	Peripheral Group #4 boot
16	PERI_MS_PPU_FX_PERI_GR5_BOOT	0x40004160	0x00000004	Peripheral Group #5 boot
17	PERI_MS_PPU_FX_PERI_GR6_BOOT	0x400041A0	0x00000004	Peripheral Group #6 boot
18	PERI_MS_PPU_FX_PERI_GR8_BOOT	0x40004220	0x00000004	Peripheral Group #8 boot
19	PERI_MS_PPU_FX_PERI_GR9_BOOT	0x40004260	0x00000004	Peripheral Group #9 boot
20	PERI_MS_PPU_FX_PERI_TR	0x40008000	0x00008000	Peripheral trigger multiplexer
21	PERI_MS_PPU_FX_PERI_MS_BOOT	0x40030000	0x00001000	Peripheral master slave boot
22	PERI_MS_PPU_FX_PERI_PCLK_MAIN	0x40040000	0x00004000	Peripheral clock main
23	PERI_MS_PPU_FX_CRYPTO_MAIN	0x40100000	0x00000400	Crypto main
24	PERI_MS_PPU_FX_CRYPTO_CRYPTO	0x40101000	0x00000800	Crypto MMIO (Memory Mapped I/O)
25	PERI_MS_PPU_FX_CRYPTO_BOOT	0x40102000	0x00000100	Crypto boot
26	PERI_MS_PPU_FX_CRYPTO_KEY0	0x40102100	0x00000004	Crypto Key #0
27	PERI_MS_PPU_FX_CRYPTO_KEY1	0x40102120	0x00000004	Crypto Key #1
28	PERI_MS_PPU_FX_CRYPTO_BUF	0x40108000	0x00002000	Crypto buffer
29	PERI_MS_PPU_FX_CPUSS_CM7_0	0x40200000	0x00000400	CM7_0 CPU core
30	PERI_MS_PPU_FX_CPUSS_CM7_1	0x40200400	0x00000400	CM7_1 CPU core
31	PERI_MS_PPU_FX_CPUSS_CM0	0x40201000	0x00001000	CM0+ CPU core
32	PERI_MS_PPU_FX_CPUSS_BOOT[40]	0x40202000	0x00000200	CPUSS boot
33	PERI_MS_PPU_FX_CPUSS_CM0_INT	0x40208000	0x00001000	CPUSS CM0+ interrupts
34	PERI_MS_PPU_FX_CPUSS_CM7_0_INT	0x4020A000	0x00001000	CPUSS CM7_0 interrupts
35	PERI_MS_PPU_FX_CPUSS_CM7_1_INT	0x4020C000	0x00001000	CPUSS CM7_1 interrupts
36	PERI_MS_PPU_FX_FAULT_STRUCT0_MAIN	0x40210000	0x00000100	CPUSS Fault Structure #0 main

Note
40. Fixed PPU is configured inside the Boot and user is not allowed to change the attributes of this PPU.

Table 26 PPU fixed structure pairs *(continued)*

Pair No.	PPU Fixed Structure Pair	Address	Size	Description
37	PERI_MS_PPU_FX_FAULT_STRUCT1_MAIN	0x40210100	0x00000100	CPUSS Fault Structure #1 main
38	PERI_MS_PPU_FX_FAULT_STRUCT2_MAIN	0x40210200	0x00000100	CPUSS Fault Structure #2 main
39	PERI_MS_PPU_FX_FAULT_STRUCT3_MAIN	0x40210300	0x00000100	CPUSS Fault Structure #3 main
40	PERI_MS_PPU_FX_IPC_STRUCT0_IPC	0x40220000	0x00000020	CPUSS IPC Structure #0
41	PERI_MS_PPU_FX_IPC_STRUCT1_IPC	0x40220020	0x00000020	CPUSS IPC Structure #1
42	PERI_MS_PPU_FX_IPC_STRUCT2_IPC	0x40220040	0x00000020	CPUSS IPC Structure #2
43	PERI_MS_PPU_FX_IPC_STRUCT3_IPC	0x40220060	0x00000020	CPUSS IPC Structure #3
44	PERI_MS_PPU_FX_IPC_STRUCT4_IPC	0x40220080	0x00000020	CPUSS IPC Structure #4
45	PERI_MS_PPU_FX_IPC_STRUCT5_IPC	0x402200A0	0x00000020	CPUSS IPC Structure #5
46	PERI_MS_PPU_FX_IPC_STRUCT6_IPC	0x402200C0	0x00000020	CPUSS IPC Structure #6
47	PERI_MS_PPU_FX_IPC_STRUCT7_IPC	0x402200E0	0x00000020	CPUSS IPC Structure #7
48	PERI_MS_PPU_FX_IPC_INTR_STRUCT0_INTR	0x40221000	0x00000010	CPUSS IPC Interrupt Structure #0
49	PERI_MS_PPU_FX_IPC_INTR_STRUCT1_INTR	0x40221020	0x00000010	CPUSS IPC Interrupt Structure #1
50	PERI_MS_PPU_FX_IPC_INTR_STRUCT2_INTR	0x40221040	0x00000010	CPUSS IPC Interrupt Structure #2
51	PERI_MS_PPU_FX_IPC_INTR_STRUCT3_INTR	0x40221060	0x00000010	CPUSS IPC Interrupt Structure #3
52	PERI_MS_PPU_FX_IPC_INTR_STRUCT4_INTR	0x40221080	0x00000010	CPUSS IPC Interrupt Structure #4
53	PERI_MS_PPU_FX_IPC_INTR_STRUCT5_INTR	0x402210A0	0x00000010	CPUSS IPC Interrupt Structure #5
54	PERI_MS_PPU_FX_IPC_INTR_STRUCT6_INTR	0x402210C0	0x00000010	CPUSS IPC Interrupt Structure #6
55	PERI_MS_PPU_FX_IPC_INTR_STRUCT7_INTR	0x402210E0	0x00000010	CPUSS IPC Interrupt Structure #7
56	PERI_MS_PPU_FX_PROT_SMPU_MAIN	0x40230000	0x00000040	Peripheral protection SMPU main
57	PERI_MS_PPU_FX_PROT_MPU0_MAIN	0x40234000	0x00000004	Peripheral protection MPU #0 main
58	PERI_MS_PPU_FX_PROT_MPU5_MAIN	0x40235400	0x00000400	Peripheral protection MPU #5 main
59	PERI_MS_PPU_FX_PROT_MPU6_MAIN	0x40235800	0x00000400	Peripheral protection MPU #6 main
60	PERI_MS_PPU_FX_PROT_MPU13_MAIN	0x40237400	0x00000004	Peripheral protection MPU #13 main
61	PERI_MS_PPU_FX_PROT_MPU14_MAIN	0x40237800	0x00000004	Peripheral protection MPU #14 main
62	PERI_MS_PPU_FX_PROT_MPU15_MAIN	0x40237C00	0x00000400	Peripheral protection MPU #15 main
63	PERI_MS_PPU_FX_FLASHC_MAIN	0x40240000	0x00000008	Flash controller main
64	PERI_MS_PPU_FX_FLASHC_CMD	0x40240008	0x00000004	Flash controller command
65	PERI_MS_PPU_FX_FLASHC_DFT	0x40240200	0x00000100	Flash controller tests
66	PERI_MS_PPU_FX_FLASHC_CM0	0x40240400	0x00000080	Flash controller CM0+
67	PERI_MS_PPU_FX_FLASHC_CM7_0	0x402404E0	0x00000004	Flash controller CM7_0
68	PERI_MS_PPU_FX_FLASHC_CM7_1	0x40240560	0x00000004	Flash controller CM7_1
69	PERI_MS_PPU_FX_FLASHC_CRYPTO	0x40240580	0x00000004	Flash controller Crypto
70	PERI_MS_PPU_FX_FLASHC_DW0	0x40240600	0x00000004	Flash controller P-DMA0
71	PERI_MS_PPU_FX_FLASHC_DW1	0x40240680	0x00000004	Flash controller P-DMA1
72	PERI_MS_PPU_FX_FLASHC_DMAC	0x40240700	0x00000004	Flash controller M-DMA0
73	PERI_MS_PPU_FX_FLASHC_SLOW0	0x40240780	0x00000004	Flash External AHB-Lite Master 0

Note
40.Fixed PPU is configured inside the Boot and user is not allowed to change the attributes of this PPU.

Table 26 PPU fixed structure pairs *(continued)*

Pair No.	PPU Fixed Structure Pair	Address	Size	Description
74	PERI_MS_PPU_FX_FLASHC_FlashMgmt[40]	0x4024F000	0x00000080	Flash management
75	PERI_MS_PPU_FX_FLASHC_MainSafety	0x4024F400	0x00000008	Flash controller code-flash safety
76	PERI_MS_PPU_FX_FLASHC_WorkSafety	0x4024F500	0x00000004	Flash controller work-flash safety
77	PERI_MS_PPU_FX_FLASHC_FM	0x4024F000	0x00001000	Flash management
78	PERI_MS_PPU_FX_SRSS_GENERAL	0x40260000	0x00000400	SRSS General
79	PERI_MS_PPU_FX_SRSS_MAIN	0x40261000	0x00001000	SRSS main
80	PERI_MS_PPU_FX_SRSS_SECURE	0x40262000	0x00002000	SRSS secure
81	PERI_MS_PPU_FX_MCWDT0_CONFIG	0x40268000	0x00000080	MCWDT #0 configuration
82	PERI_MS_PPU_FX_MCWDT1_CONFIG	0x40268100	0x00000080	MCWDT #1 configuration
83	PERI_MS_PPU_FX_MCWDT2_CONFIG	0x40268200	0x00000080	MCWDT #2 configuration
84	PERI_MS_PPU_FX_MCWDT0_MAIN	0x40268080	0x00000040	MCWDT #0 main
85	PERI_MS_PPU_FX_MCWDT1_MAIN	0x40268180	0x00000040	MCWDT #1 main
86	PERI_MS_PPU_FX_MCWDT2_MAIN	0x40268280	0x00000040	MCWDT #2 main
87	PERI_MS_PPU_FX_WDT_CONFIG	0x4026C000	0x00000020	System WDT configuration
88	PERI_MS_PPU_FX_WDT_MAIN	0x4026C040	0x00000020	System WDT main
89	PERI_MS_PPU_FX_BACKUP_BACKUP	0x40270000	0x00010000	SRSS backup
90	PERI_MS_PPU_FX_DW0_DW	0x40280000	0x00000100	P-DMA0 main
91	PERI_MS_PPU_FX_DW1_DW	0x40290000	0x00000100	P-DMA1 main
92	PERI_MS_PPU_FX_DW0_DW_CRC	0x40280100	0x00000080	P-DMA0 CRC
93	PERI_MS_PPU_FX_DW1_DW_CRC	0x40290100	0x00000080	P-DMA1 CRC
94	PERI_MS_PPU_FX_DW0_CH_STRUCT0_CH	0x40288000	0x00000040	P-DMA0 Channel #0
95	PERI_MS_PPU_FX_DW0_CH_STRUCT1_CH	0x40288040	0x00000040	P-DMA0 Channel #1
96	PERI_MS_PPU_FX_DW0_CH_STRUCT2_CH	0x40288080	0x00000040	P-DMA0 Channel #2
97	PERI_MS_PPU_FX_DW0_CH_STRUCT3_CH	0x402880C0	0x00000040	P-DMA0 Channel #3
98	PERI_MS_PPU_FX_DW0_CH_STRUCT4_CH	0x40288100	0x00000040	P-DMA0 Channel #4
99	PERI_MS_PPU_FX_DW0_CH_STRUCT5_CH	0x40288140	0x00000040	P-DMA0 Channel #5
100	PERI_MS_PPU_FX_DW0_CH_STRUCT6_CH	0x40288180	0x00000040	P-DMA0 Channel #6
101	PERI_MS_PPU_FX_DW0_CH_STRUCT7_CH	0x402881C0	0x00000040	P-DMA0 Channel #7
102	PERI_MS_PPU_FX_DW0_CH_STRUCT8_CH	0x40288200	0x00000040	P-DMA0 Channel #8
103	PERI_MS_PPU_FX_DW0_CH_STRUCT9_CH	0x40288240	0x00000040	P-DMA0 Channel #9
104	PERI_MS_PPU_FX_DW0_CH_STRUCT10_CH	0x40288280	0x00000040	P-DMA0 Channel #10
105	PERI_MS_PPU_FX_DW0_CH_STRUCT11_CH	0x402882C0	0x00000040	P-DMA0 Channel #11
106	PERI_MS_PPU_FX_DW0_CH_STRUCT12_CH	0x40288300	0x00000040	P-DMA0 Channel #12
107	PERI_MS_PPU_FX_DW0_CH_STRUCT13_CH	0x40288340	0x00000040	P-DMA0 Channel #13
108	PERI_MS_PPU_FX_DW0_CH_STRUCT14_CH	0x40288380	0x00000040	P-DMA0 Channel #14
109	PERI_MS_PPU_FX_DW0_CH_STRUCT15_CH	0x402883C0	0x00000040	P-DMA0 Channel #15
110	PERI_MS_PPU_FX_DW0_CH_STRUCT16_CH	0x40288400	0x00000040	P-DMA0 Channel #16
111	PERI_MS_PPU_FX_DW0_CH_STRUCT17_CH	0x40288440	0x00000040	P-DMA0 Channel #17
112	PERI_MS_PPU_FX_DW0_CH_STRUCT18_CH	0x40288480	0x00000040	P-DMA0 Channel #18
113	PERI_MS_PPU_FX_DW0_CH_STRUCT19_CH	0x402884C0	0x00000040	P-DMA0 Channel #19
114	PERI_MS_PPU_FX_DW0_CH_STRUCT20_CH	0x40288500	0x00000040	P-DMA0 Channel #20

Note
40.Fixed PPU is configured inside the Boot and user is not allowed to change the attributes of this PPU.

Table 26 PPU fixed structure pairs *(continued)*

Pair No.	PPU Fixed Structure Pair	Address	Size	Description
115	PERI_MS_PPU_FX_DW0_CH_STRUCT21_CH	0x40288540	0x00000040	P-DMA0 Channel #21
116	PERI_MS_PPU_FX_DW0_CH_STRUCT22_CH	0x40288580	0x00000040	P-DMA0 Channel #22
117	PERI_MS_PPU_FX_DW0_CH_STRUCT23_CH	0x402885C0	0x00000040	P-DMA0 Channel #23
118	PERI_MS_PPU_FX_DW0_CH_STRUCT24_CH	0x40288600	0x00000040	P-DMA0 Channel #24
119	PERI_MS_PPU_FX_DW0_CH_STRUCT25_CH	0x40288640	0x00000040	P-DMA0 Channel #25
120	PERI_MS_PPU_FX_DW0_CH_STRUCT26_CH	0x40288680	0x00000040	P-DMA0 Channel #26
121	PERI_MS_PPU_FX_DW0_CH_STRUCT27_CH	0x402886C0	0x00000040	P-DMA0 Channel #27
122	PERI_MS_PPU_FX_DW0_CH_STRUCT28_CH	0x40288700	0x00000040	P-DMA0 Channel #28
123	PERI_MS_PPU_FX_DW0_CH_STRUCT29_CH	0x40288740	0x00000040	P-DMA0 Channel #29
124	PERI_MS_PPU_FX_DW0_CH_STRUCT30_CH	0x40288780	0x00000040	P-DMA0 Channel #30
125	PERI_MS_PPU_FX_DW0_CH_STRUCT31_CH	0x402887C0	0x00000040	P-DMA0 Channel #31
126	PERI_MS_PPU_FX_DW0_CH_STRUCT32_CH	0x40288800	0x00000040	P-DMA0 Channel #32
127	PERI_MS_PPU_FX_DW0_CH_STRUCT33_CH	0x40288840	0x00000040	P-DMA0 Channel #33
128	PERI_MS_PPU_FX_DW0_CH_STRUCT34_CH	0x40288880	0x00000040	P-DMA0 Channel #34
129	PERI_MS_PPU_FX_DW0_CH_STRUCT35_CH	0x402888C0	0x00000040	P-DMA0 Channel #35
130	PERI_MS_PPU_FX_DW0_CH_STRUCT36_CH	0x40288900	0x00000040	P-DMA0 Channel #36
131	PERI_MS_PPU_FX_DW0_CH_STRUCT37_CH	0x40288940	0x00000040	P-DMA0 Channel #37
132	PERI_MS_PPU_FX_DW0_CH_STRUCT38_CH	0x40288980	0x00000040	P-DMA0 Channel #38
133	PERI_MS_PPU_FX_DW0_CH_STRUCT39_CH	0x402889C0	0x00000040	P-DMA0 Channel #39
134	PERI_MS_PPU_FX_DW0_CH_STRUCT40_CH	0x40288A00	0x00000040	P-DMA0 Channel #40
135	PERI_MS_PPU_FX_DW0_CH_STRUCT41_CH	0x40288A40	0x00000040	P-DMA0 Channel #41
136	PERI_MS_PPU_FX_DW0_CH_STRUCT42_CH	0x40288A80	0x00000040	P-DMA0 Channel #42
137	PERI_MS_PPU_FX_DW0_CH_STRUCT43_CH	0x40288AC0	0x00000040	P-DMA0 Channel #43
138	PERI_MS_PPU_FX_DW0_CH_STRUCT44_CH	0x40288B00	0x00000040	P-DMA0 Channel #44
139	PERI_MS_PPU_FX_DW0_CH_STRUCT45_CH	0x40288B40	0x00000040	P-DMA0 Channel #45
140	PERI_MS_PPU_FX_DW0_CH_STRUCT46_CH	0x40288B80	0x00000040	P-DMA0 Channel #46
141	PERI_MS_PPU_FX_DW0_CH_STRUCT47_CH	0x40288BC0	0x00000040	P-DMA0 Channel #47
142	PERI_MS_PPU_FX_DW0_CH_STRUCT48_CH	0x40288C00	0x00000040	P-DMA0 Channel #48
143	PERI_MS_PPU_FX_DW0_CH_STRUCT49_CH	0x40288C40	0x00000040	P-DMA0 Channel #49
144	PERI_MS_PPU_FX_DW0_CH_STRUCT50_CH	0x40288C80	0x00000040	P-DMA0 Channel #50
145	PERI_MS_PPU_FX_DW0_CH_STRUCT51_CH	0x40288CC0	0x00000040	P-DMA0 Channel #51
146	PERI_MS_PPU_FX_DW0_CH_STRUCT52_CH	0x40288D00	0x00000040	P-DMA0 Channel #52
147	PERI_MS_PPU_FX_DW0_CH_STRUCT53_CH	0x40288D40	0x00000040	P-DMA0 Channel #53
148	PERI_MS_PPU_FX_DW0_CH_STRUCT54_CH	0x40288D80	0x00000040	P-DMA0 Channel #54
149	PERI_MS_PPU_FX_DW0_CH_STRUCT55_CH	0x40288DC0	0x00000040	P-DMA0 Channel #55
150	PERI_MS_PPU_FX_DW0_CH_STRUCT56_CH	0x40288E00	0x00000040	P-DMA0 Channel #56
151	PERI_MS_PPU_FX_DW0_CH_STRUCT57_CH	0x40288E40	0x00000040	P-DMA0 Channel #57
152	PERI_MS_PPU_FX_DW0_CH_STRUCT58_CH	0x40288E80	0x00000040	P-DMA0 Channel #58
153	PERI_MS_PPU_FX_DW0_CH_STRUCT59_CH	0x40288EC0	0x00000040	P-DMA0 Channel #59
154	PERI_MS_PPU_FX_DW0_CH_STRUCT60_CH	0x40288F00	0x00000040	P-DMA0 Channel #60
155	PERI_MS_PPU_FX_DW0_CH_STRUCT61_CH	0x40288F40	0x00000040	P-DMA0 Channel #61

Note
40.Fixed PPU is configured inside the Boot and user is not allowed to change the attributes of this PPU.

Table 26 PPU fixed structure pairs *(continued)*

Pair No.	PPU Fixed Structure Pair	Address	Size	Description
156	PERI_MS_PPU_FX_DW0_CH_STRUCT62_CH	0x40288F80	0x00000040	P-DMA0 Channel #62
157	PERI_MS_PPU_FX_DW0_CH_STRUCT63_CH	0x40288FC0	0x00000040	P-DMA0 Channel #63
158	PERI_MS_PPU_FX_DW0_CH_STRUCT64_CH	0x40289000	0x00000040	P-DMA0 Channel #64
159	PERI_MS_PPU_FX_DW0_CH_STRUCT65_CH	0x40289040	0x00000040	P-DMA0 Channel #65
160	PERI_MS_PPU_FX_DW0_CH_STRUCT66_CH	0x40289080	0x00000040	P-DMA0 Channel #66
161	PERI_MS_PPU_FX_DW0_CH_STRUCT67_CH	0x402890C0	0x00000040	P-DMA0 Channel #67
162	PERI_MS_PPU_FX_DW0_CH_STRUCT68_CH	0x40289100	0x00000040	P-DMA0 Channel #68
163	PERI_MS_PPU_FX_DW0_CH_STRUCT69_CH	0x40289140	0x00000040	P-DMA0 Channel #69
164	PERI_MS_PPU_FX_DW0_CH_STRUCT70_CH	0x40289180	0x00000040	P-DMA0 Channel #70
165	PERI_MS_PPU_FX_DW0_CH_STRUCT71_CH	0x402891C0	0x00000040	P-DMA0 Channel #71
166	PERI_MS_PPU_FX_DW0_CH_STRUCT72_CH	0x40289200	0x00000040	P-DMA0 Channel #72
167	PERI_MS_PPU_FX_DW0_CH_STRUCT73_CH	0x40289240	0x00000040	P-DMA0 Channel #73
168	PERI_MS_PPU_FX_DW0_CH_STRUCT74_CH	0x40289280	0x00000040	P-DMA0 Channel #74
169	PERI_MS_PPU_FX_DW0_CH_STRUCT75_CH	0x402892C0	0x00000040	P-DMA0 Channel #75
170	PERI_MS_PPU_FX_DW0_CH_STRUCT76_CH	0x40289300	0x00000040	P-DMA0 Channel #76
171	PERI_MS_PPU_FX_DW0_CH_STRUCT77_CH	0x40289340	0x00000040	P-DMA0 Channel #77
172	PERI_MS_PPU_FX_DW0_CH_STRUCT78_CH	0x40289380	0x00000040	P-DMA0 Channel #78
173	PERI_MS_PPU_FX_DW0_CH_STRUCT79_CH	0x402893C0	0x00000040	P-DMA0 Channel #79
174	PERI_MS_PPU_FX_DW0_CH_STRUCT80_CH	0x40289400	0x00000040	P-DMA0 Channel #80
175	PERI_MS_PPU_FX_DW0_CH_STRUCT81_CH	0x40289440	0x00000040	P-DMA0 Channel #81
176	PERI_MS_PPU_FX_DW0_CH_STRUCT82_CH	0x40289480	0x00000040	P-DMA0 Channel #82
177	PERI_MS_PPU_FX_DW0_CH_STRUCT83_CH	0x402894C0	0x00000040	P-DMA0 Channel #83
178	PERI_MS_PPU_FX_DW0_CH_STRUCT84_CH	0x40289500	0x00000040	P-DMA0 Channel #84
179	PERI_MS_PPU_FX_DW0_CH_STRUCT85_CH	0x40289540	0x00000040	P-DMA0 Channel #85
180	PERI_MS_PPU_FX_DW0_CH_STRUCT86_CH	0x40289580	0x00000040	P-DMA0 Channel #86
181	PERI_MS_PPU_FX_DW0_CH_STRUCT87_CH	0x402895C0	0x00000040	P-DMA0 Channel #87
182	PERI_MS_PPU_FX_DW0_CH_STRUCT88_CH	0x40289600	0x00000040	P-DMA0 Channel #88
183	PERI_MS_PPU_FX_DW0_CH_STRUCT89_CH	0x40289640	0x00000040	P-DMA0 Channel #89
184	PERI_MS_PPU_FX_DW0_CH_STRUCT90_CH	0x40289680	0x00000040	P-DMA0 Channel #90
185	PERI_MS_PPU_FX_DW0_CH_STRUCT91_CH	0x402896C0	0x00000040	P-DMA0 Channel #91
186	PERI_MS_PPU_FX_DW0_CH_STRUCT92_CH	0x40289700	0x00000040	P-DMA0 Channel #92
187	PERI_MS_PPU_FX_DW0_CH_STRUCT93_CH	0x40289740	0x00000040	P-DMA0 Channel #93
188	PERI_MS_PPU_FX_DW0_CH_STRUCT94_CH	0x40289780	0x00000040	P-DMA0 Channel #94
189	PERI_MS_PPU_FX_DW0_CH_STRUCT95_CH	0x402897C0	0x00000040	P-DMA0 Channel #95
190	PERI_MS_PPU_FX_DW0_CH_STRUCT96_CH	0x40289800	0x00000040	P-DMA0 Channel #96
191	PERI_MS_PPU_FX_DW0_CH_STRUCT97_CH	0x40289840	0x00000040	P-DMA0 Channel #97
192	PERI_MS_PPU_FX_DW0_CH_STRUCT98_CH	0x40289880	0x00000040	P-DMA0 Channel #98
193	PERI_MS_PPU_FX_DW0_CH_STRUCT99_CH	0x402898C0	0x00000040	P-DMA0 Channel #99
194	PERI_MS_PPU_FX_DW1_CH_STRUCT0_CH	0x40298000	0x00000040	P-DMA1 Channel #0
195	PERI_MS_PPU_FX_DW1_CH_STRUCT1_CH	0x40298040	0x00000040	P-DMA1 Channel #1
196	PERI_MS_PPU_FX_DW1_CH_STRUCT2_CH	0x40298080	0x00000040	P-DMA1 Channel #2

Note
40.Fixed PPU is configured inside the Boot and user is not allowed to change the attributes of this PPU.

Table 26 PPU fixed structure pairs *(continued)*

Pair No.	PPU Fixed Structure Pair	Address	Size	Description
197	PERI_MS_PPU_FX_DW1_CH_STRUCT3_CH	0x402980C0	0x00000040	P-DMA1 Channel #3
198	PERI_MS_PPU_FX_DW1_CH_STRUCT4_CH	0x40298100	0x00000040	P-DMA1 Channel #4
199	PERI_MS_PPU_FX_DW1_CH_STRUCT5_CH	0x40298140	0x00000040	P-DMA1 Channel #5
200	PERI_MS_PPU_FX_DW1_CH_STRUCT6_CH	0x40298180	0x00000040	P-DMA1 Channel #6
201	PERI_MS_PPU_FX_DW1_CH_STRUCT7_CH	0x402981C0	0x00000040	P-DMA1 Channel #7
202	PERI_MS_PPU_FX_DW1_CH_STRUCT8_CH	0x40298200	0x00000040	P-DMA1 Channel #8
203	PERI_MS_PPU_FX_DW1_CH_STRUCT9_CH	0x40298240	0x00000040	P-DMA1 Channel #9
204	PERI_MS_PPU_FX_DW1_CH_STRUCT10_CH	0x40298280	0x00000040	P-DMA1 Channel #10
205	PERI_MS_PPU_FX_DW1_CH_STRUCT11_CH	0x402982C0	0x00000040	P-DMA1 Channel #11
206	PERI_MS_PPU_FX_DW1_CH_STRUCT12_CH	0x40298300	0x00000040	P-DMA1 Channel #12
207	PERI_MS_PPU_FX_DW1_CH_STRUCT13_CH	0x40298340	0x00000040	P-DMA1 Channel #13
208	PERI_MS_PPU_FX_DW1_CH_STRUCT14_CH	0x40298380	0x00000040	P-DMA1 Channel #14
209	PERI_MS_PPU_FX_DW1_CH_STRUCT15_CH	0x402983C0	0x00000040	P-DMA1 Channel #15
210	PERI_MS_PPU_FX_DW1_CH_STRUCT16_CH	0x40298400	0x00000040	P-DMA1 Channel #16
211	PERI_MS_PPU_FX_DW1_CH_STRUCT17_CH	0x40298440	0x00000040	P-DMA1 Channel #17
212	PERI_MS_PPU_FX_DW1_CH_STRUCT18_CH	0x40298480	0x00000040	P-DMA1 Channel #18
213	PERI_MS_PPU_FX_DW1_CH_STRUCT19_CH	0x402984C0	0x00000040	P-DMA1 Channel #19
214	PERI_MS_PPU_FX_DW1_CH_STRUCT20_CH	0x40298500	0x00000040	P-DMA1 Channel #20
215	PERI_MS_PPU_FX_DW1_CH_STRUCT21_CH	0x40298540	0x00000040	P-DMA1 Channel #21
216	PERI_MS_PPU_FX_DW1_CH_STRUCT22_CH	0x40298580	0x00000040	P-DMA1 Channel #22
217	PERI_MS_PPU_FX_DW1_CH_STRUCT23_CH	0x402985C0	0x00000040	P-DMA1 Channel #23
218	PERI_MS_PPU_FX_DW1_CH_STRUCT24_CH	0x40298600	0x00000040	P-DMA1 Channel #24
219	PERI_MS_PPU_FX_DW1_CH_STRUCT25_CH	0x40298640	0x00000040	P-DMA1 Channel #25
220	PERI_MS_PPU_FX_DW1_CH_STRUCT26_CH	0x40298680	0x00000040	P-DMA1 Channel #26
221	PERI_MS_PPU_FX_DW1_CH_STRUCT27_CH	0x402986C0	0x00000040	P-DMA1 Channel #27
222	PERI_MS_PPU_FX_DW1_CH_STRUCT28_CH	0x40298700	0x00000040	P-DMA1 Channel #28
223	PERI_MS_PPU_FX_DW1_CH_STRUCT29_CH	0x40298740	0x00000040	P-DMA1 Channel #29
224	PERI_MS_PPU_FX_DW1_CH_STRUCT30_CH	0x40298780	0x00000040	P-DMA1 Channel #30
225	PERI_MS_PPU_FX_DW1_CH_STRUCT31_CH	0x402987C0	0x00000040	P-DMA1 Channel #31
226	PERI_MS_PPU_FX_DW1_CH_STRUCT32_CH	0x40298800	0x00000040	P-DMA1 Channel #32
227	PERI_MS_PPU_FX_DW1_CH_STRUCT33_CH	0x40298840	0x00000040	P-DMA1 Channel #33
228	PERI_MS_PPU_FX_DW1_CH_STRUCT34_CH	0x40298880	0x00000040	P-DMA1 Channel #34
229	PERI_MS_PPU_FX_DW1_CH_STRUCT35_CH	0x402988C0	0x00000040	P-DMA1 Channel #35
230	PERI_MS_PPU_FX_DW1_CH_STRUCT36_CH	0x40298900	0x00000040	P-DMA1 Channel #36
231	PERI_MS_PPU_FX_DW1_CH_STRUCT37_CH	0x40298940	0x00000040	P-DMA1 Channel #37
232	PERI_MS_PPU_FX_DW1_CH_STRUCT38_CH	0x40298980	0x00000040	P-DMA1 Channel #38
233	PERI_MS_PPU_FX_DW1_CH_STRUCT39_CH	0x402989C0	0x00000040	P-DMA1 Channel #39
234	PERI_MS_PPU_FX_DW1_CH_STRUCT40_CH	0x40298A00	0x00000040	P-DMA1 Channel #40
235	PERI_MS_PPU_FX_DW1_CH_STRUCT41_CH	0x40298A40	0x00000040	P-DMA1 Channel #41
236	PERI_MS_PPU_FX_DW1_CH_STRUCT42_CH	0x40298A80	0x00000040	P-DMA1 Channel #42
237	PERI_MS_PPU_FX_DW1_CH_STRUCT43_CH	0x40298AC0	0x00000040	P-DMA1 Channel #43

Note
40.Fixed PPU is configured inside the Boot and user is not allowed to change the attributes of this PPU.

Table 26 PPU fixed structure pairs *(continued)*

Pair No.	PPU Fixed Structure Pair	Address	Size	Description
238	PERI_MS_PPU_FX_DW1_CH_STRUCT44_CH	0x40298B00	0x00000040	P-DMA1 Channel #44
239	PERI_MS_PPU_FX_DW1_CH_STRUCT45_CH	0x40298B40	0x00000040	P-DMA1 Channel #45
240	PERI_MS_PPU_FX_DW1_CH_STRUCT46_CH	0x40298B80	0x00000040	P-DMA1 Channel #46
241	PERI_MS_PPU_FX_DW1_CH_STRUCT47_CH	0x40298BC0	0x00000040	P-DMA1 Channel #47
242	PERI_MS_PPU_FX_DW1_CH_STRUCT48_CH	0x40298C00	0x00000040	P-DMA1 Channel #48
243	PERI_MS_PPU_FX_DW1_CH_STRUCT49_CH	0x40298C40	0x00000040	P-DMA1 Channel #49
244	PERI_MS_PPU_FX_DW1_CH_STRUCT50_CH	0x40298C80	0x00000040	P-DMA1 Channel #50
245	PERI_MS_PPU_FX_DW1_CH_STRUCT51_CH	0x40298CC0	0x00000040	P-DMA1 Channel #51
246	PERI_MS_PPU_FX_DW1_CH_STRUCT52_CH	0x40298D00	0x00000040	P-DMA1 Channel #52
247	PERI_MS_PPU_FX_DW1_CH_STRUCT53_CH	0x40298D40	0x00000040	P-DMA1 Channel #53
248	PERI_MS_PPU_FX_DW1_CH_STRUCT54_CH	0x40298D80	0x00000040	P-DMA1 Channel #54
249	PERI_MS_PPU_FX_DW1_CH_STRUCT55_CH	0x40298DC0	0x00000040	P-DMA1 Channel #55
250	PERI_MS_PPU_FX_DW1_CH_STRUCT56_CH	0x40298E00	0x00000040	P-DMA1 Channel #56
251	PERI_MS_PPU_FX_DW1_CH_STRUCT57_CH	0x40298E40	0x00000040	P-DMA1 Channel #57
252	PERI_MS_PPU_FX_DMAC_TOP	0x402A0000	0x00000010	M-DMA0 main
253	PERI_MS_PPU_FX_DMAC_CH0_CH	0x402A1000	0x00000100	M-DMA0 Channel #0
254	PERI_MS_PPU_FX_DMAC_CH1_CH	0x402A1100	0x00000100	M-DMA0 Channel #1
255	PERI_MS_PPU_FX_DMAC_CH2_CH	0x402A1200	0x00000100	M-DMA0 Channel #2
256	PERI_MS_PPU_FX_DMAC_CH3_CH	0x402A1300	0x00000100	M-DMA0 Channel #3
257	PERI_MS_PPU_FX_DMAC_CH4_CH	0x402A1400	0x00000100	M-DMA0 Channel #4
258	PERI_MS_PPU_FX_DMAC_CH5_CH	0x402A1500	0x00000100	M-DMA0 Channel #5
259	PERI_MS_PPU_FX_DMAC_CH6_CH	0x402A1600	0x00000100	M-DMA0 Channel #6
260	PERI_MS_PPU_FX_DMAC_CH7_CH	0x402A1700	0x00000100	M-DMA0 Channel #7
261	PERI_MS_PPU_FX_EFUSE_CTL	0x402C0000	0x00000200	EFUSE control
262	PERI_MS_PPU_FX_EFUSE_DATA	0x402C0800	0x00000200	EFUSE data
263	PERI_MS_PPU_FX_BIST	0x402F0000	0x00001000	Built-in self test
264	PERI_MS_PPU_FX_HSIOM_PRT0_PRT	0x40300000	0x00000008	HSIOm Port #0
265	PERI_MS_PPU_FX_HSIOM_PRT1_PRT	0x40300010	0x00000008	HSIOm Port #1
266	PERI_MS_PPU_FX_HSIOM_PRT2_PRT	0x40300020	0x00000008	HSIOm Port #2
267	PERI_MS_PPU_FX_HSIOM_PRT3_PRT	0x40300030	0x00000008	HSIOm Port #3
268	PERI_MS_PPU_FX_HSIOM_PRT4_PRT	0x40300040	0x00000008	HSIOm Port #4
269	PERI_MS_PPU_FX_HSIOM_PRT5_PRT	0x40300050	0x00000008	HSIOm Port #5
270	PERI_MS_PPU_FX_HSIOM_PRT6_PRT	0x40300060	0x00000008	HSIOm Port #6
271	PERI_MS_PPU_FX_HSIOM_PRT7_PRT	0x40300070	0x00000008	HSIOm Port #7
272	PERI_MS_PPU_FX_HSIOM_PRT8_PRT	0x40300080	0x00000008	HSIOm Port #8
273	PERI_MS_PPU_FX_HSIOM_PRT9_PRT	0x40300090	0x00000008	HSIOm Port #9
274	PERI_MS_PPU_FX_HSIOM_PRT10_PRT	0x403000A0	0x00000008	HSIOm Port #10
275	PERI_MS_PPU_FX_HSIOM_PRT11_PRT	0x403000B0	0x00000008	HSIOm Port #11
276	PERI_MS_PPU_FX_HSIOM_PRT12_PRT	0x403000C0	0x00000008	HSIOm Port #12
277	PERI_MS_PPU_FX_HSIOM_PRT13_PRT	0x403000D0	0x00000008	HSIOm Port #13
278	PERI_MS_PPU_FX_HSIOM_PRT14_PRT	0x403000E0	0x00000008	HSIOm Port #14

Note
40.Fixed PPU is configured inside the Boot and user is not allowed to change the attributes of this PPU.

Table 26 PPU fixed structure pairs *(continued)*

Pair No.	PPU Fixed Structure Pair	Address	Size	Description
279	PERI_MS_PPU_FX_HSIOM_PRT15_PRT	0x403000F0	0x00000008	HSIOm Port #15
280	PERI_MS_PPU_FX_HSIOM_PRT16_PRT	0x40300100	0x00000008	HSIOm Port #16
281	PERI_MS_PPU_FX_HSIOM_PRT17_PRT	0x40300110	0x00000008	HSIOm Port #17
282	PERI_MS_PPU_FX_HSIOM_PRT18_PRT	0x40300120	0x00000008	HSIOm Port #18
283	PERI_MS_PPU_FX_HSIOM_PRT19_PRT	0x40300130	0x00000008	HSIOm Port #19
284	PERI_MS_PPU_FX_HSIOM_PRT20_PRT	0x40300140	0x00000008	HSIOm Port #20
285	PERI_MS_PPU_FX_HSIOM_PRT21_PRT	0x40300150	0x00000008	HSIOm Port #21
286	PERI_MS_PPU_FX_HSIOM_PRT22_PRT	0x40300160	0x00000008	HSIOm Port #22
287	PERI_MS_PPU_FX_HSIOM_PRT23_PRT	0x40300170	0x00000008	HSIOm Port #23
288	PERI_MS_PPU_FX_HSIOM_PRT24_PRT	0x40300180	0x00000008	HSIOm Port #24
289	PERI_MS_PPU_FX_HSIOM_PRT25_PRT	0x40300190	0x00000008	HSIOm Port #25
290	PERI_MS_PPU_FX_HSIOM_PRT26_PRT	0x403001A0	0x00000008	HSIOm Port #26
291	PERI_MS_PPU_FX_HSIOM_PRT27_PRT	0x403001B0	0x00000008	HSIOm Port #27
292	PERI_MS_PPU_FX_HSIOM_PRT28_PRT	0x403001C0	0x00000008	HSIOm Port #28
293	PERI_MS_PPU_FX_HSIOM_PRT29_PRT	0x403001D0	0x00000008	HSIOm Port #29
294	PERI_MS_PPU_FX_HSIOM_PRT30_PRT	0x403001E0	0x00000008	HSIOm Port #30
295	PERI_MS_PPU_FX_HSIOM_PRT31_PRT	0x403001F0	0x00000008	HSIOm Port #31
296	PERI_MS_PPU_FX_HSIOM_PRT32_PRT	0x40300200	0x00000008	HSIOm Port #32
297	PERI_MS_PPU_FX_HSIOM_AMUX	0x40302000	0x00000010	HSIOm Analog multiplexer
298	PERI_MS_PPU_FX_HSIOM_MON	0x40302200	0x00000010	HSIOm monitor
299	PERI_MS_PPU_FX_HSIOM_ALTJTAG	0x40302240	0x00000004	HSIOm Alternate JTAG
300	PERI_MS_PPU_FX_GPIO_PRT0_PRT	0x40310000	0x00000040	GPIO_ENH Port #0
301	PERI_MS_PPU_FX_GPIO_PRT1_PRT	0x40310080	0x00000040	GPIO_STD Port #1
302	PERI_MS_PPU_FX_GPIO_PRT2_PRT	0x40310100	0x00000040	GPIO_STD Port #2
303	PERI_MS_PPU_FX_GPIO_PRT3_PRT	0x40310180	0x00000040	GPIO_STD Port #3
304	PERI_MS_PPU_FX_GPIO_PRT4_PRT	0x40310200	0x00000040	GPIO_STD Port #4
305	PERI_MS_PPU_FX_GPIO_PRT5_PRT	0x40310280	0x00000040	GPIO_STD Port #5
306	PERI_MS_PPU_FX_GPIO_PRT6_PRT	0x40310300	0x00000040	GPIO_STD Port #6
307	PERI_MS_PPU_FX_GPIO_PRT7_PRT	0x40310380	0x00000040	GPIO_STD Port #7
308	PERI_MS_PPU_FX_GPIO_PRT8_PRT	0x40310400	0x00000040	GPIO_STD Port #8
309	PERI_MS_PPU_FX_GPIO_PRT9_PRT	0x40310480	0x00000040	GPIO_STD Port #9
310	PERI_MS_PPU_FX_GPIO_PRT10_PRT	0x40310500	0x00000040	GPIO_STD Port #10
311	PERI_MS_PPU_FX_GPIO_PRT11_PRT	0x40310580	0x00000040	GPIO_STD Port #11
312	PERI_MS_PPU_FX_GPIO_PRT12_PRT	0x40310600	0x00000040	GPIO_STD Port #12
313	PERI_MS_PPU_FX_GPIO_PRT13_PRT	0x40310680	0x00000040	GPIO_STD Port #13
314	PERI_MS_PPU_FX_GPIO_PRT14_PRT	0x40310700	0x00000040	GPIO_STD Port #14
315	PERI_MS_PPU_FX_GPIO_PRT15_PRT	0x40310780	0x00000040	GPIO_STD Port #15
316	PERI_MS_PPU_FX_GPIO_PRT16_PRT	0x40310800	0x00000040	GPIO_STD Port #16
317	PERI_MS_PPU_FX_GPIO_PRT17_PRT	0x40310880	0x00000040	GPIO_STD Port #17
318	PERI_MS_PPU_FX_GPIO_PRT18_PRT	0x40310900	0x00000040	GPIO_STD Port #18
319	PERI_MS_PPU_FX_GPIO_PRT19_PRT	0x40310980	0x00000040	GPIO_STD Port #19

Note
40.Fixed PPU is configured inside the Boot and user is not allowed to change the attributes of this PPU.

Table 26 PPU fixed structure pairs *(continued)*

Pair No.	PPU Fixed Structure Pair	Address	Size	Description
320	PERI_MS_PPU_FX_GPIO_PRT20_PRT	0x40310A00	0x00000040	GPIO_STD Port #20
321	PERI_MS_PPU_FX_GPIO_PRT21_PRT	0x40310A80	0x00000040	GPIO_STD Port #21
322	PERI_MS_PPU_FX_GPIO_PRT22_PRT	0x40310B00	0x00000040	GPIO_STD Port #22
323	PERI_MS_PPU_FX_GPIO_PRT23_PRT	0x40310B80	0x00000040	GPIO_STD Port #23
324	PERI_MS_PPU_FX_GPIO_PRT24_PRT	0x40310C00	0x00000040	HSIO_STD Port #24
325	PERI_MS_PPU_FX_GPIO_PRT25_PRT	0x40310C80	0x00000040	HSIO_STD Port #25
326	PERI_MS_PPU_FX_GPIO_PRT26_PRT	0x40310D00	0x00000040	HSIO_STD Port #26
327	PERI_MS_PPU_FX_GPIO_PRT27_PRT	0x40310D80	0x00000040	HSIO_STD Port #27
328	PERI_MS_PPU_FX_GPIO_PRT28_PRT	0x40310E00	0x00000040	GPIO_STD Port #28
329	PERI_MS_PPU_FX_GPIO_PRT29_PRT	0x40310E80	0x00000040	GPIO_STD Port #29
330	PERI_MS_PPU_FX_GPIO_PRT30_PRT	0x40310F00	0x00000040	GPIO_STD Port #30
331	PERI_MS_PPU_FX_GPIO_PRT31_PRT	0x40310F80	0x00000040	GPIO_STD Port #31
332	PERI_MS_PPU_FX_GPIO_PRT32_PRT	0x40311000	0x00000040	GPIO_STD Port #32
333	PERI_MS_PPU_FX_GPIO_PRT0_CFG	0x40310040	0x00000020	GPIO_ENH Port #0 configuration
334	PERI_MS_PPU_FX_GPIO_PRT1_CFG	0x403100C0	0x00000020	GPIO_STD Port #1 configuration
335	PERI_MS_PPU_FX_GPIO_PRT2_CFG	0x40310140	0x00000020	GPIO_STD Port #2 configuration
336	PERI_MS_PPU_FX_GPIO_PRT3_CFG	0x403101C0	0x00000020	GPIO_STD Port #3 configuration
337	PERI_MS_PPU_FX_GPIO_PRT4_CFG	0x40310240	0x00000020	GPIO_STD Port #4 configuration
338	PERI_MS_PPU_FX_GPIO_PRT5_CFG	0x403102C0	0x00000020	GPIO_STD Port #5 configuration
339	PERI_MS_PPU_FX_GPIO_PRT6_CFG	0x40310340	0x00000020	GPIO_STD Port #6 configuration
340	PERI_MS_PPU_FX_GPIO_PRT7_CFG	0x403103C0	0x00000020	GPIO_STD Port #7 configuration
341	PERI_MS_PPU_FX_GPIO_PRT8_CFG	0x40310440	0x00000020	GPIO_STD Port #8 configuration
342	PERI_MS_PPU_FX_GPIO_PRT9_CFG	0x403104C0	0x00000020	GPIO_STD Port #9 configuration
343	PERI_MS_PPU_FX_GPIO_PRT10_CFG	0x40310540	0x00000020	GPIO_STD Port #10 configuration
344	PERI_MS_PPU_FX_GPIO_PRT11_CFG	0x403105C0	0x00000020	GPIO_STD Port #11 configuration
345	PERI_MS_PPU_FX_GPIO_PRT12_CFG	0x40310640	0x00000020	GPIO_STD Port #12 configuration
346	PERI_MS_PPU_FX_GPIO_PRT13_CFG	0x403106C0	0x00000020	GPIO_STD Port #13 configuration
347	PERI_MS_PPU_FX_GPIO_PRT14_CFG	0x40310740	0x00000020	GPIO_STD Port #14 configuration
348	PERI_MS_PPU_FX_GPIO_PRT15_CFG	0x403107C0	0x00000020	GPIO_STD Port #15 configuration
349	PERI_MS_PPU_FX_GPIO_PRT16_CFG	0x40310840	0x00000020	GPIO_STD Port #16 configuration

Note
40.Fixed PPU is configured inside the Boot and user is not allowed to change the attributes of this PPU.

Table 26 PPU fixed structure pairs *(continued)*

Pair No.	PPU Fixed Structure Pair	Address	Size	Description
350	PERI_MS_PPU_FX_GPIO_PRT17_CFG	0x403108C0	0x00000020	GPIO_STD Port #17 configuration
351	PERI_MS_PPU_FX_GPIO_PRT18_CFG	0x40310940	0x00000020	GPIO_STD Port #18 configuration
352	PERI_MS_PPU_FX_GPIO_PRT19_CFG	0x403109C0	0x00000020	GPIO_STD Port #19 configuration
353	PERI_MS_PPU_FX_GPIO_PRT20_CFG	0x40310A40	0x00000020	GPIO_STD Port #20 configuration
354	PERI_MS_PPU_FX_GPIO_PRT21_CFG	0x40310AC0	0x00000020	GPIO_STD Port #21 configuration
355	PERI_MS_PPU_FX_GPIO_PRT22_CFG	0x40310B40	0x00000020	GPIO_STD Port #22 configuration
356	PERI_MS_PPU_FX_GPIO_PRT23_CFG	0x40310BC0	0x00000020	GPIO_STD Port #23 configuration
357	PERI_MS_PPU_FX_GPIO_PRT24_CFG	0x40310C40	0x00000020	HSIO_STD Port #24 configuration
358	PERI_MS_PPU_FX_GPIO_PRT25_CFG	0x40310CC0	0x00000020	HSIO_STD Port #25 configuration
359	PERI_MS_PPU_FX_GPIO_PRT26_CFG	0x40310D40	0x00000020	HSIO_STD Port #26 configuration
360	PERI_MS_PPU_FX_GPIO_PRT27_CFG	0x40310DC0	0x00000020	HSIO_STD Port #27 configuration
361	PERI_MS_PPU_FX_GPIO_PRT28_CFG	0x40310E40	0x00000020	GPIO_STD Port #28 configuration
362	PERI_MS_PPU_FX_GPIO_PRT29_CFG	0x40310EC0	0x00000020	GPIO_STD Port #29 configuration
363	PERI_MS_PPU_FX_GPIO_PRT30_CFG	0x40310F40	0x00000020	GPIO_STD Port #30 configuration
364	PERI_MS_PPU_FX_GPIO_PRT31_CFG	0x40310FC0	0x00000020	GPIO_STD Port #31 configuration
365	PERI_MS_PPU_FX_GPIO_PRT32_CFG	0x40311040	0x00000020	GPIO_STD Port #32 configuration
366	PERI_MS_PPU_FX_GPIO_GPIO	0x40314000	0x00000040	GPIO main
367	PERI_MS_PPU_FX_GPIO_TEST	0x40315000	0x00000008	GPIO test
368	PERI_MS_PPU_FX_SMARTIO_PRT12_PRT	0x40320C00	0x00000100	SMART I/O #12
369	PERI_MS_PPU_FX_SMARTIO_PRT13_PRT	0x40320D00	0x00000100	SMART I/O #13
370	PERI_MS_PPU_FX_SMARTIO_PRT14_PRT	0x40320E00	0x00000100	SMART I/O #14
371	PERI_MS_PPU_FX_SMARTIO_PRT15_PRT	0x40320F00	0x00000100	SMART I/O #15
372	PERI_MS_PPU_FX_SMARTIO_PRT17_PRT	0x40321100	0x00000100	SMART I/O #17
373	PERI_MS_PPU_FX_EVTGEN0	0x403F0000	0x00001000	Event generator #0
374	PERI_MS_PPU_FX_SMIF0	0x40420000	0x00010000	Serial Memory Interface #0
375	PERI_MS_PPU_FX_SDHC0	0x40460000	0x00010000	Secure Digital High Capacity #0
376	PERI_MS_PPU_FX_ETH0	0x40480000	0x00010000	Ethernet0
377 - 393	Reserve	-	-	Reserved for future use
394	PERI_MS_PPU_FX_CANFD0_CH0_CH	0x40520000	0x00000200	CAN0, Channel #0
395	PERI_MS_PPU_FX_CANFD0_CH1_CH	0x40520200	0x00000200	CAN0, Channel #1

Note
40.Fixed PPU is configured inside the Boot and user is not allowed to change the attributes of this PPU.

Table 26 PPU fixed structure pairs *(continued)*

Pair No.	PPU Fixed Structure Pair	Address	Size	Description
396	PERI_MS_PPU_FX_CANFD0_CH2_CH	0x40520400	0x00000200	CAN0, Channel #2
397	PERI_MS_PPU_FX_CANFD0_CH3_CH	0x40520600	0x00000200	CAN0, Channel #3
398	PERI_MS_PPU_FX_CANFD1_CH0_CH	0x40540000	0x00000200	CAN1, Channel #0
399	PERI_MS_PPU_FX_CANFD1_CH1_CH	0x40540200	0x00000200	CAN1, Channel #1
400	PERI_MS_PPU_FX_CANFD1_CH2_CH	0x40540400	0x00000200	CAN1, Channel #2
401	PERI_MS_PPU_FX_CANFD1_CH3_CH	0x40540600	0x00000200	CAN1, Channel #3
402	PERI_MS_PPU_FX_CANFD0_MAIN	0x40521000	0x00000100	CAN0 main
403	PERI_MS_PPU_FX_CANFD1_MAIN	0x40541000	0x00000100	CAN1 main
404	PERI_MS_PPU_FX_CANFD0_BUF	0x40530000	0x00010000	CAN0 buffer
405	PERI_MS_PPU_FX_CANFD1_BUF	0x40550000	0x00010000	CAN1 buffer
406	PERI_MS_PPU_FX_TCPWM0_GRP0_CNT0_CNT	0x40580000	0x00000080	TCPWM0 Group #0, Counter #0
407	PERI_MS_PPU_FX_TCPWM0_GRP0_CNT1_CNT	0x40580080	0x00000080	TCPWM0 Group #0, Counter #1
408	PERI_MS_PPU_FX_TCPWM0_GRP0_CNT2_CNT	0x40580100	0x00000080	TCPWM0 Group #0, Counter #2
409	PERI_MS_PPU_FX_TCPWM0_GRP0_CNT3_CNT	0x40580180	0x00000080	TCPWM0 Group #0, Counter #3
410	PERI_MS_PPU_FX_TCPWM0_GRP0_CNT4_CNT	0x40580200	0x00000080	TCPWM0 Group #0, Counter #4
411	PERI_MS_PPU_FX_TCPWM0_GRP0_CNT5_CNT	0x40580280	0x00000080	TCPWM0 Group #0, Counter #5
412	PERI_MS_PPU_FX_TCPWM0_GRP0_CNT6_CNT	0x40580300	0x00000080	TCPWM0 Group #0, Counter #6
413	PERI_MS_PPU_FX_TCPWM0_GRP0_CNT7_CNT	0x40580380	0x00000080	TCPWM0 Group #0, Counter #7
414	PERI_MS_PPU_FX_TCPWM0_GRP0_CNT8_CNT	0x40580400	0x00000080	TCPWM0 Group #0, Counter #8
415	PERI_MS_PPU_FX_TCPWM0_GRP0_CNT9_CNT	0x40580480	0x00000080	TCPWM0 Group #0, Counter #9
416	PERI_MS_PPU_FX_TCPWM0_GRP0_CNT10_CNT	0x40580500	0x00000080	TCPWM0 Group #0, Counter #10
417	PERI_MS_PPU_FX_TCPWM0_GRP0_CNT11_CNT	0x40580580	0x00000080	TCPWM0 Group #0, Counter #11
418	PERI_MS_PPU_FX_TCPWM0_GRP0_CNT12_CNT	0x40580600	0x00000080	TCPWM0 Group #0, Counter #12
419	PERI_MS_PPU_FX_TCPWM0_GRP0_CNT13_CNT	0x40580680	0x00000080	TCPWM0 Group #0, Counter #13
420	PERI_MS_PPU_FX_TCPWM0_GRP0_CNT14_CNT	0x40580700	0x00000080	TCPWM0 Group #0, Counter #14
421	PERI_MS_PPU_FX_TCPWM0_GRP0_CNT15_CNT	0x40580780	0x00000080	TCPWM0 Group #0, Counter #15
422	PERI_MS_PPU_FX_TCPWM0_GRP0_CNT16_CNT	0x40580800	0x00000080	TCPWM0 Group #0, Counter #16
423	PERI_MS_PPU_FX_TCPWM0_GRP0_CNT17_CNT	0x40580880	0x00000080	TCPWM0 Group #0, Counter #17
424	PERI_MS_PPU_FX_TCPWM0_GRP0_CNT18_CNT	0x40580900	0x00000080	TCPWM0 Group #0, Counter #18
425	PERI_MS_PPU_FX_TCPWM0_GRP0_CNT19_CNT	0x40580980	0x00000080	TCPWM0 Group #0, Counter #19
426	PERI_MS_PPU_FX_TCPWM0_GRP0_CNT20_CNT	0x40580A00	0x00000080	TCPWM0 Group #0, Counter #20
427	PERI_MS_PPU_FX_TCPWM0_GRP0_CNT21_CNT	0x40580A80	0x00000080	TCPWM0 Group #0, Counter #21
428	PERI_MS_PPU_FX_TCPWM0_GRP0_CNT22_CNT	0x40580B00	0x00000080	TCPWM0 Group #0, Counter #22
429	PERI_MS_PPU_FX_TCPWM0_GRP0_CNT23_CNT	0x40580B80	0x00000080	TCPWM0 Group #0, Counter #23
430	PERI_MS_PPU_FX_TCPWM0_GRP0_CNT24_CNT	0x40580C00	0x00000080	TCPWM0 Group #0, Counter #24
431	PERI_MS_PPU_FX_TCPWM0_GRP0_CNT25_CNT	0x40580C80	0x00000080	TCPWM0 Group #0, Counter #25
432	PERI_MS_PPU_FX_TCPWM0_GRP0_CNT26_CNT	0x40580D00	0x00000080	TCPWM0 Group #0, Counter #26
433	PERI_MS_PPU_FX_TCPWM0_GRP0_CNT27_CNT	0x40580D80	0x00000080	TCPWM0 Group #0, Counter #27
434	PERI_MS_PPU_FX_TCPWM0_GRP0_CNT28_CNT	0x40580E00	0x00000080	TCPWM0 Group #0, Counter #28
435	PERI_MS_PPU_FX_TCPWM0_GRP0_CNT29_CNT	0x40580E80	0x00000080	TCPWM0 Group #0, Counter #29
436	PERI_MS_PPU_FX_TCPWM0_GRP0_CNT30_CNT	0x40580F00	0x00000080	TCPWM0 Group #0, Counter #30

Note
40.Fixed PPU is configured inside the Boot and user is not allowed to change the attributes of this PPU.

Table 26 PPU fixed structure pairs *(continued)*

Pair No.	PPU Fixed Structure Pair	Address	Size	Description
437	PERI_MS_PPU_FX_TCPWM0_GRP0_CNT31_CNT	0x40580F80	0x00000080	TCPWM0 Group #0, Counter #31
438	PERI_MS_PPU_FX_TCPWM0_GRP0_CNT32_CNT	0x40581000	0x00000080	TCPWM0 Group #0, Counter #32
439	PERI_MS_PPU_FX_TCPWM0_GRP0_CNT33_CNT	0x40581080	0x00000080	TCPWM0 Group #0, Counter #33
440	PERI_MS_PPU_FX_TCPWM0_GRP0_CNT34_CNT	0x40581100	0x00000080	TCPWM0 Group #0, Counter #34
441	PERI_MS_PPU_FX_TCPWM0_GRP0_CNT35_CNT	0x40581180	0x00000080	TCPWM0 Group #0, Counter #35
442	PERI_MS_PPU_FX_TCPWM0_GRP0_CNT36_CNT	0x40581200	0x00000080	TCPWM0 Group #0, Counter #36
443	PERI_MS_PPU_FX_TCPWM0_GRP0_CNT37_CNT	0x40581280	0x00000080	TCPWM0 Group #0, Counter #37
444	PERI_MS_PPU_FX_TCPWM0_GRP0_CNT38_CNT	0x40581300	0x00000080	TCPWM0 Group #0, Counter #38
445	PERI_MS_PPU_FX_TCPWM0_GRP0_CNT39_CNT	0x40581380	0x00000080	TCPWM0 Group #0, Counter #39
446	PERI_MS_PPU_FX_TCPWM0_GRP0_CNT40_CNT	0x40581400	0x00000080	TCPWM0 Group #0, Counter #40
447	PERI_MS_PPU_FX_TCPWM0_GRP0_CNT41_CNT	0x40581480	0x00000080	TCPWM0 Group #0, Counter #41
448	PERI_MS_PPU_FX_TCPWM0_GRP0_CNT42_CNT	0x40581500	0x00000080	TCPWM0 Group #0, Counter #42
449	PERI_MS_PPU_FX_TCPWM0_GRP0_CNT43_CNT	0x40581580	0x00000080	TCPWM0 Group #0, Counter #43
450	PERI_MS_PPU_FX_TCPWM0_GRP0_CNT44_CNT	0x40581600	0x00000080	TCPWM0 Group #0, Counter #44
451	PERI_MS_PPU_FX_TCPWM0_GRP0_CNT45_CNT	0x40581680	0x00000080	TCPWM0 Group #0, Counter #45
452	PERI_MS_PPU_FX_TCPWM0_GRP0_CNT46_CNT	0x40581700	0x00000080	TCPWM0 Group #0, Counter #46
453	PERI_MS_PPU_FX_TCPWM0_GRP0_CNT47_CNT	0x40581780	0x00000080	TCPWM0 Group #0, Counter #47
454	PERI_MS_PPU_FX_TCPWM0_GRP0_CNT48_CNT	0x40581800	0x00000080	TCPWM0 Group #0, Counter #48
455	PERI_MS_PPU_FX_TCPWM0_GRP0_CNT49_CNT	0x40581880	0x00000080	TCPWM0 Group #0, Counter #49
456	PERI_MS_PPU_FX_TCPWM0_GRP0_CNT50_CNT	0x40581900	0x00000080	TCPWM0 Group #0, Counter #50
457	PERI_MS_PPU_FX_TCPWM0_GRP0_CNT51_CNT	0x40581980	0x00000080	TCPWM0 Group #0, Counter #51
458	PERI_MS_PPU_FX_TCPWM0_GRP0_CNT52_CNT	0x40581A00	0x00000080	TCPWM0 Group #0, Counter #52
459	PERI_MS_PPU_FX_TCPWM0_GRP0_CNT53_CNT	0x40581A80	0x00000080	TCPWM0 Group #0, Counter #53
460	PERI_MS_PPU_FX_TCPWM0_GRP0_CNT54_CNT	0x40581B00	0x00000080	TCPWM0 Group #0, Counter #54
461	PERI_MS_PPU_FX_TCPWM0_GRP0_CNT55_CNT	0x40581B80	0x00000080	TCPWM0 Group #0, Counter #55
462	PERI_MS_PPU_FX_TCPWM0_GRP0_CNT56_CNT	0x40581C00	0x00000080	TCPWM0 Group #0, Counter #56
463	PERI_MS_PPU_FX_TCPWM0_GRP0_CNT57_CNT	0x40581C80	0x00000080	TCPWM0 Group #0, Counter #57
464	PERI_MS_PPU_FX_TCPWM0_GRP0_CNT58_CNT	0x40581D00	0x00000080	TCPWM0 Group #0, Counter #58
465	PERI_MS_PPU_FX_TCPWM0_GRP0_CNT59_CNT	0x40581D80	0x00000080	TCPWM0 Group #0, Counter #59
466	PERI_MS_PPU_FX_TCPWM0_GRP0_CNT60_CNT	0x40581E00	0x00000080	TCPWM0 Group #0, Counter #60
467	PERI_MS_PPU_FX_TCPWM0_GRP0_CNT61_CNT	0x40581E80	0x00000080	TCPWM0 Group #0, Counter #61
468	PERI_MS_PPU_FX_TCPWM0_GRP0_CNT62_CNT	0x40581F00	0x00000080	TCPWM0 Group #0, Counter #62
469	PERI_MS_PPU_FX_TCPWM0_GRP1_CNT0_CNT	0x40588000	0x00000080	TCPWM0 Group #1, Counter #0
470	PERI_MS_PPU_FX_TCPWM0_GRP1_CNT1_CNT	0x40588080	0x00000080	TCPWM0 Group #1, Counter #1
471	PERI_MS_PPU_FX_TCPWM0_GRP1_CNT2_CNT	0x40588100	0x00000080	TCPWM0 Group #1, Counter #2
472	PERI_MS_PPU_FX_TCPWM0_GRP1_CNT3_CNT	0x40588180	0x00000080	TCPWM0 Group #1, Counter #3
473	PERI_MS_PPU_FX_TCPWM0_GRP1_CNT4_CNT	0x40588200	0x00000080	TCPWM0 Group #1, Counter #4
474	PERI_MS_PPU_FX_TCPWM0_GRP1_CNT5_CNT	0x40588280	0x00000080	TCPWM0 Group #1, Counter #5
475	PERI_MS_PPU_FX_TCPWM0_GRP1_CNT6_CNT	0x40588300	0x00000080	TCPWM0 Group #1, Counter #6
476	PERI_MS_PPU_FX_TCPWM0_GRP1_CNT7_CNT	0x40588380	0x00000080	TCPWM0 Group #1, Counter #7
477	PERI_MS_PPU_FX_TCPWM0_GRP1_CNT8_CNT	0x40588400	0x00000080	TCPWM0 Group #1, Counter #8

Note
40.Fixed PPU is configured inside the Boot and user is not allowed to change the attributes of this PPU.

Table 26 PPU fixed structure pairs *(continued)*

Pair No.	PPU Fixed Structure Pair	Address	Size	Description
478	PERI_MS_PPU_FX_TCPWM0_GRP1_CNT9_CNT	0x40588480	0x00000080	TCPWM0 Group #1, Counter #9
479	PERI_MS_PPU_FX_TCPWM0_GRP1_CNT10_CNT	0x40588500	0x00000080	TCPWM0 Group #1, Counter #10
480	PERI_MS_PPU_FX_TCPWM0_GRP1_CNT11_CNT	0x40588580	0x00000080	TCPWM0 Group #1, Counter #11
481	PERI_MS_PPU_FX_TCPWM0_GRP2_CNT0_CNT	0x40590000	0x00000080	TCPWM0 Group #2, Counter #0
482	PERI_MS_PPU_FX_TCPWM0_GRP2_CNT1_CNT	0x40590080	0x00000080	TCPWM0 Group #2, Counter #1
483	PERI_MS_PPU_FX_TCPWM0_GRP2_CNT2_CNT	0x40590100	0x00000080	TCPWM0 Group #2, Counter #2
484	PERI_MS_PPU_FX_TCPWM0_GRP2_CNT3_CNT	0x40590180	0x00000080	TCPWM0 Group #2, Counter #3
485	PERI_MS_PPU_FX_TCPWM0_GRP2_CNT4_CNT	0x40590200	0x00000080	TCPWM0 Group #2, Counter #4
486	PERI_MS_PPU_FX_TCPWM0_GRP2_CNT5_CNT	0x40590280	0x00000080	TCPWM0 Group #2, Counter #5
487	PERI_MS_PPU_FX_TCPWM0_GRP2_CNT6_CNT	0x40590300	0x00000080	TCPWM0 Group #2, Counter #6
488	PERI_MS_PPU_FX_TCPWM0_GRP2_CNT7_CNT	0x40590380	0x00000080	TCPWM0 Group #2, Counter #7
489	PERI_MS_PPU_FX_SCB0	0x40600000	0x00010000	SCB0
490	PERI_MS_PPU_FX_SCB1	0x40610000	0x00010000	SCB1
491	PERI_MS_PPU_FX_SCB2	0x40620000	0x00010000	SCB2
492	PERI_MS_PPU_FX_SCB3	0x40630000	0x00010000	SCB3
493	PERI_MS_PPU_FX_SCB4	0x40640000	0x00010000	SCB4
494	PERI_MS_PPU_FX_SCB5	0x40650000	0x00010000	SCB5
495	PERI_MS_PPU_FX_SCB6	0x40660000	0x00010000	SCB6
496	PERI_MS_PPU_FX_SCB7	0x40670000	0x00010000	SCB7
497	PERI_MS_PPU_FX_SCB8	0x40680000	0x00010000	SCB8
498	PERI_MS_PPU_FX_SCB9	0x40690000	0x00010000	SCB9
499	PERI_MS_PPU_FX_SCB10	0x406A0000	0x00010000	SCB10
500	PERI_MS_PPU_FX_I2S0	0x40800000	0x00001000	AUDIOSS I2S0
501	PERI_MS_PPU_FX_I2S1	0x40801000	0x00001000	AUDIOSS I2S1
502	PERI_MS_PPU_FX_I2S2	0x40802000	0x00001000	AUDIOSS I2S2
503	PERI_MS_PPU_FX_PASS0_SAR0_SAR	0x40900000	0x00000400	PASS SAR0
504	PERI_MS_PPU_FX_PASS0_SAR1_SAR	0x40901000	0x00000400	PASS SAR1
505	PERI_MS_PPU_FX_PASS0_SAR2_SAR	0x40902000	0x00000400	PASS SAR2
506	PERI_MS_PPU_FX_PASS0_SAR0_CH0_CH	0x40900800	0x00000040	SAR0, Channel #0
507	PERI_MS_PPU_FX_PASS0_SAR0_CH1_CH	0x40900840	0x00000040	SAR0, Channel #1
508	PERI_MS_PPU_FX_PASS0_SAR0_CH2_CH	0x40900880	0x00000040	SAR0, Channel #2
509	PERI_MS_PPU_FX_PASS0_SAR0_CH3_CH	0x409008C0	0x00000040	SAR0, Channel #3
510	PERI_MS_PPU_FX_PASS0_SAR0_CH4_CH	0x40900900	0x00000040	SAR0, Channel #4
511	PERI_MS_PPU_FX_PASS0_SAR0_CH5_CH	0x40900940	0x00000040	SAR0, Channel #5
512	PERI_MS_PPU_FX_PASS0_SAR0_CH6_CH	0x40900980	0x00000040	SAR0, Channel #6
513	PERI_MS_PPU_FX_PASS0_SAR0_CH7_CH	0x409009C0	0x00000040	SAR0, Channel #7
514	PERI_MS_PPU_FX_PASS0_SAR0_CH8_CH	0x40900A00	0x00000040	SAR0, Channel #8
515	PERI_MS_PPU_FX_PASS0_SAR0_CH9_CH	0x40900A40	0x00000040	SAR0, Channel #9
516	PERI_MS_PPU_FX_PASS0_SAR0_CH10_CH	0x40900A80	0x00000040	SAR0, Channel #10
517	PERI_MS_PPU_FX_PASS0_SAR0_CH11_CH	0x40900AC0	0x00000040	SAR0, Channel #11
518	PERI_MS_PPU_FX_PASS0_SAR0_CH12_CH	0x40900B00	0x00000040	SAR0, Channel #12

Note
40.Fixed PPU is configured inside the Boot and user is not allowed to change the attributes of this PPU.

Table 26 PPU fixed structure pairs *(continued)*

Pair No.	PPU Fixed Structure Pair	Address	Size	Description
519	PERI_MS_PPU_FX_PASS0_SAR0_CH13_CH	0x40900B40	0x00000040	SAR0, Channel #13
520	PERI_MS_PPU_FX_PASS0_SAR0_CH14_CH	0x40900B80	0x00000040	SAR0, Channel #14
521	PERI_MS_PPU_FX_PASS0_SAR0_CH15_CH	0x40900BC0	0x00000040	SAR0, Channel #15
522	PERI_MS_PPU_FX_PASS0_SAR0_CH16_CH	0x40900C00	0x00000040	SAR0, Channel #16
523	PERI_MS_PPU_FX_PASS0_SAR0_CH17_CH	0x40900C40	0x00000040	SAR0, Channel #17
524	PERI_MS_PPU_FX_PASS0_SAR0_CH18_CH	0x40900C80	0x00000040	SAR0, Channel #18
525	PERI_MS_PPU_FX_PASS0_SAR0_CH19_CH	0x40900CC0	0x00000040	SAR0, Channel #19
526	PERI_MS_PPU_FX_PASS0_SAR0_CH20_CH	0x40900D00	0x00000040	SAR0, Channel #20
527	PERI_MS_PPU_FX_PASS0_SAR0_CH21_CH	0x40900D40	0x00000040	SAR0, Channel #21
528	PERI_MS_PPU_FX_PASS0_SAR0_CH22_CH	0x40900D80	0x00000040	SAR0, Channel #22
529	PERI_MS_PPU_FX_PASS0_SAR0_CH23_CH	0x40900DC0	0x00000040	SAR0, Channel #23
530	PERI_MS_PPU_FX_PASS0_SAR0_CH24_CH	0x40900E00	0x00000040	SAR0, Channel #24
531	PERI_MS_PPU_FX_PASS0_SAR0_CH25_CH	0x40900E40	0x00000040	SAR0, Channel #25
532	PERI_MS_PPU_FX_PASS0_SAR0_CH26_CH	0x40900E80	0x00000040	SAR0, Channel #26
533	PERI_MS_PPU_FX_PASS0_SAR0_CH27_CH	0x40900EC0	0x00000040	SAR0, Channel #27
534	PERI_MS_PPU_FX_PASS0_SAR0_CH28_CH	0x40900F00	0x00000040	SAR0, Channel #28
535	PERI_MS_PPU_FX_PASS0_SAR0_CH29_CH	0x40900F40	0x00000040	SAR0, Channel #29
536	PERI_MS_PPU_FX_PASS0_SAR0_CH30_CH	0x40900F80	0x00000040	SAR0, Channel #30
537	PERI_MS_PPU_FX_PASS0_SAR0_CH31_CH	0x40900FC0	0x00000040	SAR0, Channel #31
538	PERI_MS_PPU_FX_PASS0_SAR1_CH0_CH	0x40901800	0x00000040	SAR1, Channel #0
539	PERI_MS_PPU_FX_PASS0_SAR1_CH1_CH	0x40901840	0x00000040	SAR1, Channel #1
540	PERI_MS_PPU_FX_PASS0_SAR1_CH2_CH	0x40901880	0x00000040	SAR1, Channel #2
541	PERI_MS_PPU_FX_PASS0_SAR1_CH3_CH	0x409018C0	0x00000040	SAR1, Channel #3
542	PERI_MS_PPU_FX_PASS0_SAR1_CH4_CH	0x40901900	0x00000040	SAR1, Channel #4
543	PERI_MS_PPU_FX_PASS0_SAR1_CH5_CH	0x40901940	0x00000040	SAR1, Channel #5
544	PERI_MS_PPU_FX_PASS0_SAR1_CH6_CH	0x40901980	0x00000040	SAR1, Channel #6
545	PERI_MS_PPU_FX_PASS0_SAR1_CH7_CH	0x409019C0	0x00000040	SAR1, Channel #7
546	PERI_MS_PPU_FX_PASS0_SAR1_CH8_CH	0x40901A00	0x00000040	SAR1, Channel #8
547	PERI_MS_PPU_FX_PASS0_SAR1_CH9_CH	0x40901A40	0x00000040	SAR1, Channel #9
548	PERI_MS_PPU_FX_PASS0_SAR1_CH10_CH	0x40901A80	0x00000040	SAR1, Channel #10
549	PERI_MS_PPU_FX_PASS0_SAR1_CH11_CH	0x40901AC0	0x00000040	SAR1, Channel #11
550	PERI_MS_PPU_FX_PASS0_SAR1_CH12_CH	0x40901B00	0x00000040	SAR1, Channel #12
551	PERI_MS_PPU_FX_PASS0_SAR1_CH13_CH	0x40901B40	0x00000040	SAR1, Channel #13
552	PERI_MS_PPU_FX_PASS0_SAR1_CH14_CH	0x40901B80	0x00000040	SAR1, Channel #14
553	PERI_MS_PPU_FX_PASS0_SAR1_CH15_CH	0x40901BC0	0x00000040	SAR1, Channel #15
554	PERI_MS_PPU_FX_PASS0_SAR1_CH16_CH	0x40901C00	0x00000040	SAR1, Channel #16
555	PERI_MS_PPU_FX_PASS0_SAR1_CH17_CH	0x40901C40	0x00000040	SAR1, Channel #17
556	PERI_MS_PPU_FX_PASS0_SAR1_CH18_CH	0x40901C80	0x00000040	SAR1, Channel #18
557	PERI_MS_PPU_FX_PASS0_SAR1_CH19_CH	0x40901CC0	0x00000040	SAR1, Channel #19
558	PERI_MS_PPU_FX_PASS0_SAR1_CH20_CH	0x40901D00	0x00000040	SAR1, Channel #20
559	PERI_MS_PPU_FX_PASS0_SAR1_CH21_CH	0x40901D40	0x00000040	SAR1, Channel #21

Note
40.Fixed PPU is configured inside the Boot and user is not allowed to change the attributes of this PPU.

Table 26 PPU fixed structure pairs *(continued)*

Pair No.	PPU Fixed Structure Pair	Address	Size	Description
560	PERI_MS_PPU_FX_PASS0_SAR1_CH22_CH	0x40901D80	0x00000040	SAR1, Channel #22
561	PERI_MS_PPU_FX_PASS0_SAR1_CH23_CH	0x40901DC0	0x00000040	SAR1, Channel #23
562	PERI_MS_PPU_FX_PASS0_SAR1_CH24_CH	0x40901E00	0x00000040	SAR1, Channel #24
563	PERI_MS_PPU_FX_PASS0_SAR1_CH25_CH	0x40901E40	0x00000040	SAR1, Channel #25
564	PERI_MS_PPU_FX_PASS0_SAR1_CH26_CH	0x40901E80	0x00000040	SAR1, Channel #26
565	PERI_MS_PPU_FX_PASS0_SAR1_CH27_CH	0x40901EC0	0x00000040	SAR1, Channel #27
566	PERI_MS_PPU_FX_PASS0_SAR1_CH28_CH	0x40901F00	0x00000040	SAR1, Channel #28
567	PERI_MS_PPU_FX_PASS0_SAR1_CH29_CH	0x40901F40	0x00000040	SAR1, Channel #29
568	PERI_MS_PPU_FX_PASS0_SAR1_CH30_CH	0x40901F80	0x00000040	SAR1, Channel #30
569	PERI_MS_PPU_FX_PASS0_SAR1_CH31_CH	0x40901FC0	0x00000040	SAR1, Channel #31
570	PERI_MS_PPU_FX_PASS0_SAR2_CH0_CH	0x40902800	0x00000040	SAR2, Channel #0
571	PERI_MS_PPU_FX_PASS0_SAR2_CH1_CH	0x40902840	0x00000040	SAR2, Channel #1
572	PERI_MS_PPU_FX_PASS0_SAR2_CH2_CH	0x40902880	0x00000040	SAR2, Channel #2
573	PERI_MS_PPU_FX_PASS0_SAR2_CH3_CH	0x409028C0	0x00000040	SAR2, Channel #3
574	PERI_MS_PPU_FX_PASS0_SAR2_CH4_CH	0x40902900	0x00000040	SAR2, Channel #4
575	PERI_MS_PPU_FX_PASS0_SAR2_CH5_CH	0x40902940	0x00000040	SAR2, Channel #5
576	PERI_MS_PPU_FX_PASS0_SAR2_CH6_CH	0x40902980	0x00000040	SAR2, Channel #6
577	PERI_MS_PPU_FX_PASS0_SAR2_CH7_CH	0x409029C0	0x00000040	SAR2, Channel #7
578	PERI_MS_PPU_FX_PASS0_TOP	0x409F0000	0x00001000	PASS0 SAR main

Note
40.Fixed PPU is configured inside the Boot and user is not allowed to change the attributes of this PPU.

23 Bus masters

The Arbiter (part of flash controller) performs priority-based arbitration based on the master identifier. Each bus master has a dedicated 4-bit master identifier. This master identifier is used for bus arbitration and IPC functionality.

Table 27 Bus masters for access and protection control

ID No.	Master ID	Description
0	CPUSS_MS_ID_CM0	Master ID for CM0+
1	CPUSS_MS_ID_CRYPTO	Master ID for Crypto
2	CPUSS_MS_ID_DW0	Master ID for P-DMA0
3	CPUSS_MS_ID_DW1	Master ID for P-DMA1
4	CPUSS_MS_ID_DMAC	Master ID for M-DMA0
5	CPUSS_MS_ID_SLOW0	Master ID for External AHB-Lite Master 0 (SDHC)
6	CPUSS_MS_ID_SLOW1	Master ID for External AHB-Lite Master 1 (ETH0)
13	CPUSS_MS_ID_CM7_1	Master ID for CM7_1
14	CPUSS_MS_ID_CM7_0	Master ID for CM7_0
15	CPUSS_MS_ID_TC	Master ID for DAP Tap Controller

24 Miscellaneous configuration

Table 28 Miscellaneous configuration for XMC7100 devices

Sl. No.	Configuration	Number/ instances	Description
0	SRSS_NUM_CLKPATH	7	Number of clock paths. One for each of FLL, PLL, Direct and CSV
1	SRSS_NUM_HFROOT	8	Number of CLK_HFs present
2	PERI_PC_NR	8	Number of protection contexts
3	PERI_PERI_PCLK_PCLK_GROUP_NR	2	Number of asynchronous PCLK groups
4	PERI_PERI_PCLK_P-CLK_GROUP_NR0_GR_DIV_8_VECT	3	Group 0, Number of divide-by-8 clock dividers
5	PERI_PERI_PCLK_P-CLK_GROUP_NR0_GR_DIV_16_VECT	1	Group 0, Number of divide-by-16 clock dividers
7	PERI_PERI_PCLK_PCLK_GROUP_NR0_GR_-CLOCK_VECT	6	Group 0, Number of programmable clocks [1, 256]
8	PERI_PERI_PCLK_P-CLK_GROUP_NR1_GR_DIV_8_VECT	16	Group 1, Number of divide-by-8 clock dividers
9	PERI_PERI_PCLK_P-CLK_GROUP_NR1_GR_DIV_16_VECT	17	Group 1, Number of divide-by-16 clock dividers
10	PERI_PERI_PCLK_P-CLK_GROUP_NR1_GR_DIV_24_5_VECT	16	Group 1, Number of divide-by-24.5 clock dividers
11	PERI_PERI_PCLK_PCLK_GROUP_NR1_GR_-CLOCK_VECT	121	Group 1, Number of programmable clocks [1, 256]
12	CPUSS_CM0P_MPU_NR	8	Number of MPU regions in CM0+
13	CPUSS_CM7_0_FPU_LVL	2	CM7_0 Floating point unit configuration. 0 - No FPU 1 - Single precision FPU 2 - Single and Double precision FPU
14	CPUSS_CM7_0_MPU_NR	16	Number of MPU regions in CM7_0
15	CPUSS_CM7_0_ICACHE_SIZE	16	CM7_0 Instruction cache (ICACHE) size in KB
16	CPUSS_CM7_0_DCACHE_SIZE	16	CM7_0 Data cache size (DCACHE) in KB
17	CPUSS_CM7_0_ITCM_SIZE	16	CM7_0 Instruction TCM (ITCM) size in KB
18	CPUSS_CM7_0_DTCM_SIZE	16	CM7_0 Data TCM (DTCM) size in KB
19	CPUSS_CM7_1_FPU_LVL	2	CM7_1 Floating point unit configuration. 0 - No FPU 1 - Single precision FPU 2 - Single and Double precision FPU
20	CPUSS_CM7_1_MPU_NR	16	Number of MPU regions in CM7_1
21	CPUSS_CM7_1_ICACHE_SIZE	16	CM7_1 Instruction cache (ICACHE) size in KB
22	CPUSS_CM7_1_DCACHE_SIZE	16	CM7_1 Data cache size (DCACHE) in KB
23	CPUSS_CM7_1_ITCM_SIZE	16	CM7_1 Instruction TCM (ITCM) size in KB
24	CPUSS_CM7_1_DTCM_SIZE	16	CM7_1 Data TCM (DTCM) size in KB
25	CPUSS_DW0_CH_NR	100	Number of P-DMA0 channels
26	CPUSS_DW1_CH_NR	58	Number of P-DMA1 channels
27	CPUSS_DMAC_CH_NR	8	Number of M-DMA0 controller channels

Table 28 Miscellaneous configuration for XMC7100 devices *(continued)*

Sl. No.	Configuration	Number/ instances	Description
28	CPUSS_CRYPTO_BUFF_SIZE	2048	Number of 32-bit words in the IP internal memory buffer (to allow for a 256-B, 512-B, 1-KB, 2-KB, 4-KB, 8-KB, 16-KB, and 32-KB memory buffer)
29	CPUSS_FAULT_FAULT_NR	4	Number of fault structures
30	CPUSS_IPC_IPC_NR	8	Number of IPC structures 0 - Reserved for CM0+ access 1 - Reserved for CM7_0 access 2 - Reserved for CM7_1 access 3 - Reserved for DAP access Remaining for user purposes
31	CPUSS_PROT_SMPU_STRUCT_NR	16	Number of SMPU protection structures
32	SCB0_EZ_DATA_NR	256	Number of EZ memory bytes. This memory is used in EZ mode, CMD_RESP mode and FIFO mode. Note: Only SCB0 supports CMD_RESP mode
33	TCPWM0_TR_ONE_CNT_NR	3	Number of input triggers per counter, routed to one counter
34	TCPWM0_TR_ALL_CNT_NR	27	Number of input triggers routed to all counters, based on the pin package
35	TCPWM0_GRP_NR	3	Number of TCPWM0 counter groups
36	TCPWM0_GRP_NR0_GRP_GRP_CNT_NR	63	Number of counters per TCPWM0 Group #0
37	TCPWM0_GRP_NR0_CNT_GRP_CNT_WIDTH	16	Counter width in number of bits per TCPWM0 Group #0
38	TCPWM0_GRP_NR1_GRP_GRP_CNT_NR	12	Number of counters per TCPWM0 Group #1
39	TCPWM0_GRP_NR1_CNT_GRP_CNT_WIDTH	16	Counter width in number of bits per TCPWM0 Group #1
40	TCPWM0_GRP_NR2_GRP_GRP_CNT_NR	8	Number of counters per TCPWM0 Group #2
41	TCPWM0_GRP_NR2_CNT_GRP_CNT_WIDTH	32	Counter width in number of bits per TCPWM0 Group #2
42	CANFD0_MRAM_SIZE / CANFD1_MRAM_SIZE	32	Message RAM size in KB shared by all the channels
43	EVTGEN_COMP_STRUCT_NR	16	Number of Event Generator comparator structures

25 Development support

XMC7100 has a rich set of documentation, programming tools, and online resources to assist during the development process. Visit **www.infineon.com** to find out more.

25.1 Documentation

A suite of documentation supports XMC7100 to ensure that you can find answers to your questions quickly. This section contains a list of some of the key documents.

25.1.1 Software user guide

A step-by-step guide for using the sample driver library along with Infineon IDE ModusToolbox™ software.

25.1.2 Reference manual

The reference manual contains all the technical detail needed to use a XMC7100 device, including a complete description of all registers. The reference manual is available in the documentation section at **www.infineon.com**.

25.2 Tools

XMC7100 is supported on Infineon IDE ModusToolbox™ software that gives user experience with either a local or GitHub-hosted set of software repos. XMC7100 is also supported by Infineon programming utilities for programming, erasing, or reading using Infineon's MiniProg4 or KitProg3. More details are available in the documentation section at **www.infineon.com**.

26 Electrical specifications

26.1 Absolute maximum ratings

Use of this device under conditions outside the Min and Max limits listed in **Table 29** may cause permanent damage to the device. Exposure to conditions within the limits of **Table 29** but beyond those of normal operation for extended periods of time may affect device reliability. The maximum storage temperature is 150 °C in compliance with JEDEC Standard JESD22-A103, High Temperature Storage Life. When operated under conditions within the limits of **Table 29** but beyond those of normal operation, the device may not operate to specification.

Power considerations

The average chip-junction temperature, T_J, in °C, may be calculated using Equation 1:

$$T_J = T_A + (P_D \times \theta_{JA})$$

Equation. 1

Where:

T_A is the ambient temperature in °C.

θ_{JA} is the package junction-to-ambient thermal resistance, in °C/W.

P_D is the sum of P_{INT} and P_{IO} ($P_D = P_{INT} + P_{IO}$).

P_{INT} is the chip internal power. ($P_{INT} = V_{DDD} \times I_{DD} + V_{DDA} \times I_A$)

P_{IO} represents the power dissipation on input and output pins; user determined.

For most applications, $P_{IO} < P_{INT}$ and may be neglected.

On the other hand, P_{IO} may be significant if the device is configured to continuously drive external modules and/or memories.

Notes:

- The recommended operating conditions are required to ensure the normal operation of the semiconductor device. All of the device's electrical characteristics are guaranteed when the device is operated under these conditions.
- Operation under any conditions other than those mentioned in the respective “Details/Conditions” may adversely affect reliability of the device and can result in device failure.
- No guarantee is made with respect to any use, operating conditions, or combinations not represented in this datasheet. If you want to operate the device under any condition other than those listed herein, contact the sales representatives.

Table 29 Absolute maximum ratings

Spec ID	Parameter	Description	Min	Typ	Max	Unit	Details/ conditions
SID10	V_{DDD_ABS}	V_{DDD} power supply voltage[41]	V_{SSD} – 0.3	–	V_{SSD} + 6.0	V	For ports 0, 1, 2, 3, 4, 5, 16, 17, 18, 19, 20, 21, 22, 23, 28, 29, 30, 31
SID10B	$V_{DDIO_1_ABS}$	V_{DDIO_1} power supply voltage[41]	V_{SSD} – 0.3	–	V_{SSD} + 6.0	V	For ports 6, 7, 8, 9, 32
SID10C	$V_{DDIO_2_ABS}$	V_{DDIO_2} power supply voltage[41]	V_{SSD} – 0.3	–	V_{SSD} + 6.0	V	For ports 10, 11, 12, 13, 14, 15, 26, 27
SID10D	$V_{DDIO_3_ABS}$	V_{DDIO_3} power supply voltage[41]	V_{SSIO_3} – 0.3	–	V_{SSIO_3} + 4.0	V	For ports 24, 25
SID11	V_{DDA_ABS}	V_{DDA} analog power supply voltage[41]	V_{SSA} – 0.3	–	V_{SSA} + 6.0	V	$V_{DDIO_2} = V_{DDA}$
SID12	V_{REFH_ABS}	Analog reference voltage, HIGH[41]	V_{SSA} – 0.3	–	V_{SSA} + 6.0	V	$V_{REFH} \leq (V_{DDA} + 0.3\ V)$
SID12A	V_{REFL_ABS}	Analog reference voltage, LOW[41]	V_{SSA} – 0.3	–	V_{SSA} + 0.3	V	–
SID13	V_{CCD_ABS}	V_{CCD} Power supply voltage[41]	V_{SSD} – 0.3	–	V_{SSD} + 1.21	V	–
SID15A	V_{I0_ABS}	Input voltage[41]	V_{SSD} – 0.5	–	V_{DDD} + 0.5	V	For ports 0, 1, 2, 3, 4, 5, 16, 17, 18, 19, 20, 21, 22, 23, 28, 29, 30, 31
SID15B	V_{I1_ABS}	Input voltage[41]	V_{SSD} – 0.5	–	V_{DDIO_1} + 0.5	V	For ports 6, 7, 8, 9, 32
SID15C1	V_{I2_ABS}	Input voltage[41]	V_{SSD} – 0.5	–	V_{DDIO_2} + 0.5	V	For ports 10, 11, 12, 13, 14, 15, 26, 27
SID15D	V_{I3_ABS}	Input voltage[41]	V_{SSIO_3} – 0.5	–	V_{DDIO_3} + 0.5	V	For ports 24, 25
SID15F	V_{I5_ABS}	Input voltage[41]	V_{SSD} – 0.5	–	V_{DDD} + 0.5	V	For EXT_PS_CTL0 in external PMIC/transistor mode, EXT_PS_CTL1 in external transistor mode
SID16	V_{IA_ABS}	Analog input voltage[41]	V_{SSA} – 0.3	–	V_{DDA} + 0.3	V	–

Notes

41. These parameters are based on the condition that $V_{SSD} = V_{SSA} = V_{SSIO_3} = 0.0$ V.
42. The current-limiting resistor must be provided such that the current at the I/O pin does not exceed rated values at any time, including during power transients. See the **Figure 15** for more information on the recommended circuit.
43. V_{DDD} and V_{DDIO} must be sufficiently loaded or protected to prevent them from being pulled out of the recommended operating range by the clamp current.
44. When the conditions of [41], [44] and SID18A/B/C/D are met, $|I_{CLAMP_ABS}|$ supersedes V_{IA_ABS} and V_{I_ABS}.
45. The definition of "closer" depends on the package. In TEQFP packaging, "closest" is determined by counting pins. For example, in a 176-TEQFP package, P17.4 (pin 120) is closer to the V_{DDD} on pin 110 than on pin 132. Ports 11 and 21 should not be used for injection currents. The impact of injection currents is only defined for GPIO_STD/GPIO_ENH type I/Os. In BGA packaging, the following IO port groups are treated as having separate supply pins: Ports 0, 1, 2, 22, 23, and 28; Ports 3, 4, 5, 29, 30, and 31; Ports 6, 7, 8, 9, and 32; Ports 10, 12, 13, 14, 15, 26, and 27; Ports 16 and 17; Ports 18, 19, and 20.
46. The maximum output current is the peak current flowing through any one I/O.
47. The maximum output current is the peak current flowing through any one I/O.
48. The total output current is the maximum current flowing through all GPIO_STD and GPIO_ENH I/Os.
49. The average output current is defined as the value of the average current flowing through any one of the corresponding pins for a 10 ms period. The average value is the operation current × the operation ratio. The operation current period over the average current spec should be less than 100 ns.
50. The total output current is the maximum current flowing through all GPIO_STD and GPIO_ENH I/Os.
51. The total output current is the maximum current flowing through all HSIO_STD I/Os.
52. The total output power dissipation is the maximum power dissipation flowing through all I/Os.
$PIO = (V_{DDD}, V_{DDIO_1}, V_{DDIO_2}) \times (|\Sigma I_{OH_ABS_GPIO}| + |\Sigma I_{OL_ABS_GPIO}|) + V_{DDIO_3} \times (|\Sigma I_{OH_ABS_HSIO}| + |\Sigma I_{OL_ABS_HSIO}|)$

Table 29 Absolute maximum ratings *(continued)*

Spec ID	Parameter	Description	Min	Typ	Max	Unit	Details/ conditions
SID17A	V_{O0_ABS}	Output voltage[41]	V_{SSD} – 0.3	–	V_{DDD} + 0.3	V	For ports 0, 1, 2, 3, 4, 5, 16, 17, 18, 19, 20, 21, 22, 23, 28, 29, 30, 31
SID17B	V_{O1_ABS}	Output voltage[41]	V_{SSD} – 0.3	–	V_{DDIO_1} + 0.3	V	For ports 6, 7, 8, 9, 32
SID17C1	V_{O2_ABS}	Output voltage[41]	V_{SSD} – 0.3	–	V_{DDIO_2} + 0.3	V	For ports 10, 11, 12, 13, 14, 15, 26, 27
SID17D	V_{O3_ABS}	Output voltage[41]	V_{SSIO_3} – 0.3	–	V_{DDIO_3} + 0.3	V	For ports 24, 25
SID17F	V_{O4_ABS}	Output voltage[41]	V_{SSD} – 0.3	–	V_{DDD} + 0.3	V	For EXT_PS_CTL1/2 in external PMIC mode, DRV_VOUT in external transistor mode
SID18	$\|I_{CLAMP_ABS}\|$	Maximum clamp current[42, 43, 44]	–5	–	5	mA	–
SID18A	$I_{CLAMP_SUPPLY_POS_ABS}$	Maximum positive clamp current per I/O supply pin. Limit applies to I/O supply pin closest to the B+ injected current[45]	–	–	10	mA	+B injected DC current is not allowed for Ports 11 and 21
SID18B	$I_{CLAMP_SUPPLY_NEG_ABS}$	Maximum negative clamp current per I/O ground pin. Limit applies to I/O supply pin closest to the B+ injected current[45]	–	–	10	mA	+B injected DC current is not allowed for Ports 11 and 21
SID18C	$I_{CLAMP_TOTAL_POS_ABS}$	Maximum positive clamp current per I/O supply, if not limited by the per supply pin (based on SID18A).	–	–	50	mA	–
SID18D	$I_{CLAMP_TOTAL_NEG_ABS}$	Maximum negative clamp current per I/O ground, if not limited by the per supply pin (based on SID18B)	–	–	50	mA	–
SID20A	I_{OL1A_ABS}	LOW-level maximum output current[46]	–	–	6	mA	GPIO_STD, configured for drive_sel<1:0>= 0b0X

Notes

41. These parameters are based on the condition that $V_{SSD} = V_{SSA} = V_{SSIO_3} = 0.0$ V.
42. The current-limiting resistor must be provided such that the current at the I/O pin does not exceed rated values at any time, including during power transients. See the **Figure 15** for more information on the recommended circuit.
43. V_{DDD} and V_{DDIO} must be sufficiently loaded or protected to prevent them from being pulled out of the recommended operating range by the clamp current.
44. When the conditions of [41], [44] and SID18A/B/C/D are met, $|I_{CLAMP_ABS}|$ supersedes V_{IA_ABS} and V_{I_ABS}.
45. The definition of "closer" depends on the package. In TEQFP packaging, "closest" is determined by counting pins. For example, in a 176-TEQFP package, P17.4 (pin 120) is closer to the V_{DDD} on pin 110 than on pin 132. Ports 11 and 21 should not be used for injection currents. The impact of injection currents is only defined for GPIO_STD/GPIO_ENH type I/Os. In BGA packaging, the following IO port groups are treated as having separate supply pins: Ports 0, 1, 2, 22, 23, and 28; Ports 3, 4, 5, 29, 30, and 31; Ports 6, 7, 8, 9, and 32; Ports 10, 12, 13, 14, 15, 26, and 27; Ports 16 and 17; Ports 18, 19, and 20.
46. The maximum output current is the peak current flowing through any one I/O.
47. The maximum output current is the peak current flowing through any one I/O.
48. The total output current is the maximum current flowing through all GPIO_STD and GPIO_ENH I/Os.
49. The average output current is defined as the value of the average current flowing through any one of the corresponding pins for a 10 ms period. The average value is the operation current × the operation ratio. The operation current period over the average current spec should be less than 100 ns.
50. The total output current is the maximum current flowing through all GPIO_STD and GPIO_ENH I/Os.
51. The total output current is the maximum current flowing through all HSIO_STD I/Os.
52. The total output power dissipation is the maximum power dissipation flowing through all I/Os.
PIO = $(V_{DDD}, V_{DDIO_1}, V_{DDIO_2}) \times (|\Sigma I_{OH_ABS_GPIO}| + |\Sigma I_{OL_ABS_GPIO}|) + V_{DDIO_3} \times (|\Sigma I_{OH_ABS_HSIO}| + |\Sigma I_{OL_ABS_HSIO}|)$

Table 29 Absolute maximum ratings *(continued)*

Spec ID	Parameter	Description	Min	Typ	Max	Unit	Details/ conditions
SID20B	I_{OL1B_ABS}	LOW-level maximum output current[46]	–	–	2	mA	GPIO_STD, configured for drive_sel<1:0>= 0b10
SID20C	I_{OL1C_ABS}	LOW-level maximum output current[46]	–	–	1	mA	GPIO_STD, configured for drive_sel<1:0>= 0b11
SID21A	I_{OL2A_ABS}	LOW-level maximum output current[46]	–	–	6	mA	GPIO_ENH, configured for drive_sel<1:0>= 0b0X
SID21B	I_{OL2B_ABS}	LOW-level maximum output current[46]	–	–	2	mA	GPIO_ENH, configured for drive_sel<1:0>= 0b10
SID21C	I_{OL2C_ABS}	LOW-level maximum output current[46]	–	–	1	mA	GPIO_ENH, configured for drive_sel<1:0>= 0b11
SID22A	I_{OL3A_ABS}	LOW-level maximum output current[46]	–	–	10	mA	HSIO, configured for drive_sel<1:0>= 0b00
SID22B	I_{OL3B_ABS}	LOW-level maximum output current[46]	–	–	2	mA	HSIO, configured for drive_sel<1:0>= 0b01
SID22C	I_{OL3C_ABS}	LOW-level maximum output current[46]	–	–	1	mA	HSIO, configured for drive_sel<1:0>= 0b10
SID22D	I_{OL3D_ABS}	LOW-level maximum output current[47]	–	–	0.5	mA	HSIO, configured for drive_sel<1:0>= 0b11

Notes

41. These parameters are based on the condition that $V_{SSD} = V_{SSA} = V_{SSIO_3} = 0.0$ V.
42. The current-limiting resistor must be provided such that the current at the I/O pin does not exceed rated values at any time, including during power transients. See the **Figure 15** for more information on the recommended circuit.
43. V_{DDD} and V_{DDIO} must be sufficiently loaded or protected to prevent them from being pulled out of the recommended operating range by the clamp current.
44. When the conditions of [41], [44] and SID18A/B/C/D are met, $|I_{CLAMP_ABS}|$ supersedes V_{IA_ABS} and V_{I_ABS}.
45. The definition of “closer” depends on the package. In TEQFP packaging, “closest” is determined by counting pins. For example, in a 176-TEQFP package, P17.4 (pin 120) is closer to the V_{DDD} on pin 110 than on pin 132. Ports 11 and 21 should not be used for injection currents. The impact of injection currents is only defined for GPIO_STD/GPIO_ENH type I/Os. In BGA packaging, the following IO port groups are treated as having separate supply pins: Ports 0, 1, 2, 22, 23, and 28; Ports 3, 4, 5, 29, 30, and 31; Ports 6, 7, 8, 9, and 32; Ports 10, 12, 13, 14, 15, 26, and 27; Ports 16 and 17; Ports 18, 19, and 20.
46. The maximum output current is the peak current flowing through any one I/O.
47. The maximum output current is the peak current flowing through any one I/O.
48. The total output current is the maximum current flowing through all GPIO_STD and GPIO_ENH I/Os.
49. The average output current is defined as the value of the average current flowing through any one of the corresponding pins for a 10 ms period. The average value is the operation current × the operation ratio. The operation current period over the average current spec should be less than 100 ns.
50. The total output current is the maximum current flowing through all GPIO_STD and GPIO_ENH I/Os.
51. The total output current is the maximum current flowing through all HSIO_STD I/Os.
52. The total output power dissipation is the maximum power dissipation flowing through all I/Os.
$PIO = (V_{DDD}, V_{DDIO_1}, V_{DDIO_2}) \times (|\Sigma I_{OH_ABS_GPIO}| + |\Sigma I_{OL_ABS_GPIO}|) + V_{DDIO_3} \times (|\Sigma I_{OH_ABS_HSIO}| + |\Sigma I_{OL_ABS_HSIO}|)$

Table 29 Absolute maximum ratings *(continued)*

Spec ID	Parameter	Description	Min	Typ	Max	Unit	Details/ conditions
SID23A	I_{OL4A_ABS}	Sink maximum current[48]	–	–	4	mA	For pin EXT_PS_CTL1 in external PMIC mode and internal regulator mode and pin EXT_PS_CTL2 in external PMIC mode
SID23B	I_{OL4B_ABS}	Sink average current[50]	–	–	1	mA	For pin EXT_PS_CTL1 in external PMIC mode and internal regulator mode and pin EXT_PS_CTL2 in external PMIC mode
SID23C	I_{OL4C_ABS}	Sink maximum current[47]	–	–	25	mA	For pin DRV_VOUT in external transistor mode
SID26A	$\Sigma I_{OL_ABS_GPIO}$	LOW-level total output current[49]	–	–	50	mA	–
SID26B	$\Sigma I_{OL_ABS_HSIO}$	LOW-level total output current[51]	–	–	85	mA	–
SID27A	I_{OH1A_ABS}	HIGH-level maximum output current[48]	–	–	–5	mA	GPIO_STD, configured for drive_sel<1:0>= 0b0X
SID27B	I_{OH1B_ABS}	HIGH-level maximum output current[48]	–	–	–2	mA	GPIO_STD, configured for drive_sel<1:0>= 0b10
SID27C	I_{OH1C_ABS}	HIGH-level maximum output current[48]	–	–	–1	mA	GPIO_STD, configured for drive_sel<1:0>= 0b11
SID28A	I_{OH2A_ABS}	HIGH-level maximum output current[48]	–	–	–5	mA	GPIO_ENH, configured for drive_sel<1:0>= 0b0X

Notes

41. These parameters are based on the condition that $V_{SSD} = V_{SSA} = V_{SSIO_3} = 0.0$ V.
42. The current-limiting resistor must be provided such that the current at the I/O pin does not exceed rated values at any time, including during power transients. See the **Figure 15** for more information on the recommended circuit.
43. V_{DDD} and V_{DDIO} must be sufficiently loaded or protected to prevent them from being pulled out of the recommended operating range by the clamp current.
44. When the conditions of [41], [44] and SID18A/B/C/D are met, $|I_{CLAMP_ABS}|$ supersedes V_{IA_ABS} and V_{I_ABS}.
45. The definition of "closer" depends on the package. In TEQFP packaging, "closest" is determined by counting pins. For example, in a 176-TEQFP package, P17.4 (pin 120) is closer to the V_{DDD} on pin 110 than on pin 132. Ports 11 and 21 should not be used for injection currents. The impact of injection currents is only defined for GPIO_STD/GPIO_ENH type I/Os. In BGA packaging, the following IO port groups are treated as having separate supply pins: Ports 0, 1, 2, 22, 23, and 28; Ports 3, 4, 5, 29, 30, and 31; Ports 6, 7, 8, 9, and 32; Ports 10, 12, 13, 14, 15, 26, and 27; Ports 16 and 17; Ports 18, 19, and 20.
46. The maximum output current is the peak current flowing through any one I/O.
47. The maximum output current is the peak current flowing through any one I/O.
48. The total output current is the maximum current flowing through all GPIO_STD and GPIO_ENH I/Os.
49. The average output current is defined as the value of the average current flowing through any one of the corresponding pins for a 10 ms period. The average value is the operation current × the operation ratio. The operation current period over the average current spec should be less than 100 ns.
50. The total output current is the maximum current flowing through all GPIO_STD and GPIO_ENH I/Os.
51. The total output current is the maximum current flowing through all HSIO_STD I/Os.
52. The total output power dissipation is the maximum power dissipation flowing through all I/Os.
$PIO = (V_{DDD}, V_{DDIO_1}, V_{DDIO_2}) \times (|\Sigma I_{OH_ABS_GPIO}| + |\Sigma I_{OL_ABS_GPIO}|) + V_{DDIO_3} \times (|\Sigma I_{OH_ABS_HSIO}| + |\Sigma I_{OL_ABS_HSIO}|)$

Table 29 Absolute maximum ratings *(continued)*

Spec ID	Parameter	Description	Min	Typ	Max	Unit	Details/ conditions
SID28B	I_{OH2B_ABS}	HIGH-level maximum output current[48]	–	–	–2	mA	GPIO_ENH, configured for drive_sel<1:0>= 0b10
SID28C	I_{OH2C_ABS}	HIGH-level maximum output current[48]	–	–	–1	mA	GPIO_ENH, configured for drive_sel<1:0>= 0b11
SID29A	I_{OH3A_ABS}	HIGH-level maximum output current[48]	–	–	–10	mA	HSIO, configured for drive_sel<1:0>= 0b00
SID29B	I_{OH3B_ABS}	HIGH-level maximum output current[48]	–	–	–2	mA	HSIO, configured for drive_sel<1:0>= 0b01
SID29C	I_{OH3C_ABS}	HIGH-level maximum output current[48]	–	–	–1	mA	HSIO, configured for drive_sel<1:0>= 0b10
SID29D	I_{OH3D_ABS}	HIGH-level maximum output current[48]	–	–	–0.5	mA	HSIO, configured for drive_sel<1:0>= 0b11
SID30A	I_{OH4A_ABS}	Source maximum current[48]	–	–	–4	mA	For pin EXT_PS_CTL1 in external PMIC mode and internal regulator mode and pin EXT_PS_CTL2 in external PMIC mode.
SID30B	I_{OH4B_ABS}	Source maximum current[48]	–	–	–25	mA	For pin DRV_VOUT in external transistor mode.
SID30C	I_{OH4C_ABS}	Source average current[50]	–	–	–1	mA	For pin EXT_PS_CTL1 in external PMIC mode and internal regulator mode and pin EXT_PS_CTL2 in external PMIC mode.

Notes

41. These parameters are based on the condition that $V_{SSD} = V_{SSA} = V_{SSIO_3} = 0.0$ V.
42. The current-limiting resistor must be provided such that the current at the I/O pin does not exceed rated values at any time, including during power transients. See the **Figure 15** for more information on the recommended circuit.
43. V_{DDD} and V_{DDIO} must be sufficiently loaded or protected to prevent them from being pulled out of the recommended operating range by the clamp current.
44. When the conditions of [41], [44] and SID18A/B/C/D are met, $|I_{CLAMP_ABS}|$ supersedes V_{IA_ABS} and V_{I_ABS}.
45. The definition of "closer" depends on the package. In TEQFP packaging, "closest" is determined by counting pins. For example, in a 176-TEQFP package, P17.4 (pin 120) is closer to the V_{DDD} on pin 110 than on pin 132. Ports 11 and 21 should not be used for injection currents. The impact of injection currents is only defined for GPIO_STD/GPIO_ENH type I/Os. In BGA packaging, the following IO port groups are treated as having separate supply pins: Ports 0, 1, 2, 22, 23, and 28; Ports 3, 4, 5, 29, 30, and 31; Ports 6, 7, 8, 9, and 32; Ports 10, 12, 13, 14, 15, 26, and 27; Ports 16 and 17; Ports 18, 19, and 20.
46. The maximum output current is the peak current flowing through any one I/O.
47. The maximum output current is the peak current flowing through any one I/O.
48. The total output current is the maximum current flowing through all GPIO_STD and GPIO_ENH I/Os.
49. The average output current is defined as the value of the average current flowing through any one of the corresponding pins for a 10 ms period. The average value is the operation current × the operation ratio. The operation current period over the average current spec should be less than 100 ns.
50. The total output current is the maximum current flowing through all GPIO_STD and GPIO_ENH I/Os.
51. The total output current is the maximum current flowing through all HSIO_STD I/Os.
52. The total output power dissipation is the maximum power dissipation flowing through all I/Os.
$PIO = (V_{DDD}, V_{DDIO_1}, V_{DDIO_2}) \times (|\Sigma I_{OH_ABS_GPIO}| + |\Sigma I_{OL_ABS_GPIO}|) + V_{DDIO_3} \times (|\Sigma I_{OH_ABS_HSIO}| + |\Sigma I_{OL_ABS_HSIO}|)$

Table 29 Absolute maximum ratings *(continued)*

Spec ID	Parameter	Description	Min	Typ	Max	Unit	Details/ conditions
SID30D	I_{OH4D_ABS}	Source average current[50]	–	–	–12	mA	For pin DRV_VOUT in external transistor mode.
SID33A	$\Sigma I_{OH_ABS_GPIO}$	HIGH-level total output current[50]	–	–	–50	mA	–
SID33B	$\Sigma I_{OH_ABS_HSIO}$	HIGH-level total output current[51]	–	–	–85	mA	–
SID33D	PIO	Total output power dissipation[52]	–	–	307	mW	–
SID34	P_D	Power dissipation for external PMIC/transistor mode	–	–	1000	mW	T_J should not exceed 150°C
SID34A	P_D	Power dissipation for internal regulator mode	–	–	2000	mW	T_J should not exceed 150°C
SID36	T_A	Ambient temperature	–40	–	125	°C	–
SID37	T_{STG}	Storage temperature	–55	–	150	°C	–
SID38	T_J	Operating junction temperature	–40	–	150	°C	–
SID39A	V_{ESD_HBM}	Electrostatic discharge human body model	2000	–	–	V	–
SID39B1	V_{ESD_CDM1}	Electrostatic discharge charged device model for corner pins	750	–	–	V	–
SID39B2	V_{ESD_CDM2}	Electrostatic discharge charged device model for all other pins	500	–	–	V	–
SID39C	I_{LU}	The maximum pin current the device can tolerate before triggering a latch-up	–100	–	100	mA	–

Notes

41. These parameters are based on the condition that $V_{SSD} = V_{SSA} = V_{SSIO_3} = 0.0$ V.
42. The current-limiting resistor must be provided such that the current at the I/O pin does not exceed rated values at any time, including during power transients. See the **Figure 15** for more information on the recommended circuit.
43. V_{DDD} and V_{DDIO} must be sufficiently loaded or protected to prevent them from being pulled out of the recommended operating range by the clamp current.
44. When the conditions of [41], [44] and SID18A/B/C/D are met, $|I_{CLAMP_ABS}|$ supersedes V_{IA_ABS} and V_{I_ABS}.
45. The definition of "closer" depends on the package. In TEQFP packaging, "closest" is determined by counting pins. For example, in a 176-TEQFP package, P17.4 (pin 120) is closer to the V_{DDD} on pin 110 than on pin 132. Ports 11 and 21 should not be used for injection currents. The impact of injection currents is only defined for GPIO_STD/GPIO_ENH type I/Os. In BGA packaging, the following IO port groups are treated as having separate supply pins: Ports 0, 1, 2, 22, 23, and 28; Ports 3, 4, 5, 29, 30, and 31; Ports 6, 7, 8, 9, and 32; Ports 10, 12, 13, 14, 15, 26, and 27; Ports 16 and 17; Ports 18, 19, and 20.
46. The maximum output current is the peak current flowing through any one I/O.
47. The maximum output current is the peak current flowing through any one I/O.
48. The total output current is the maximum current flowing through all GPIO_STD and GPIO_ENH I/Os.
49. The average output current is defined as the value of the average current flowing through any one of the corresponding pins for a 10 ms period. The average value is the operation current × the operation ratio. The operation current period over the average current spec should be less than 100 ns.
50. The total output current is the maximum current flowing through all GPIO_STD and GPIO_ENH I/Os.
51. The total output current is the maximum current flowing through all HSIO_STD I/Os.
52. The total output power dissipation is the maximum power dissipation flowing through all I/Os.
$PIO = (V_{DDD}, V_{DDIO_1}, V_{DDIO_2}) \times (|\Sigma I_{OH_ABS_GPIO}| + |\Sigma I_{OL_ABS_GPIO}|) + V_{DDIO_3} \times (|\Sigma I_{OH_ABS_HSIO}| + |\Sigma I_{OL_ABS_HSIO}|)$

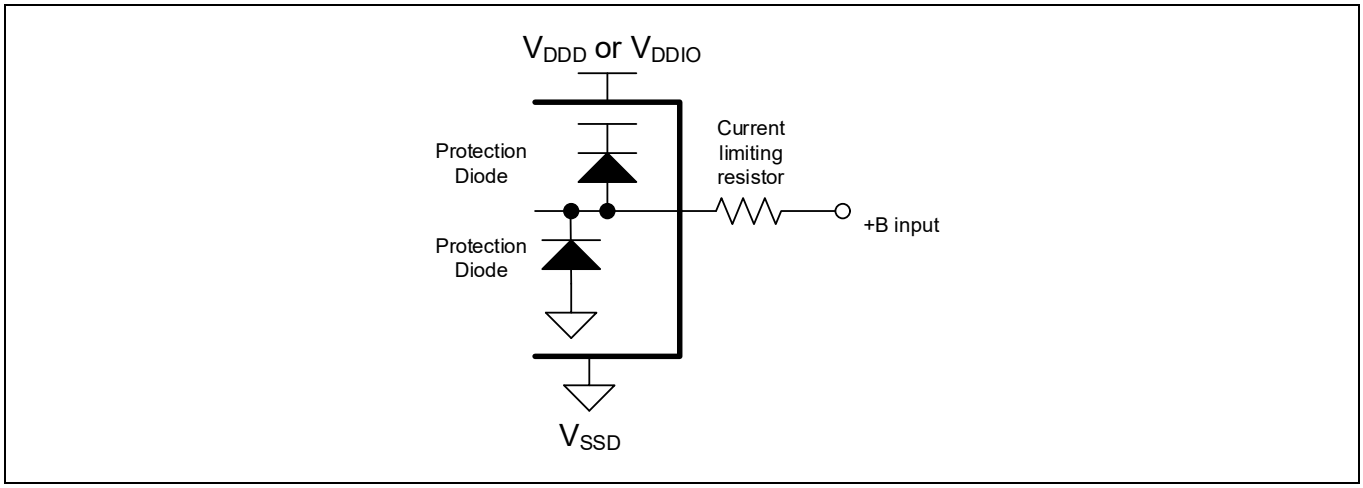

Figure 15 Example of a recommended circuit[55]

Note

Semiconductor devices may be permanently damaged by application of stress (including, without limitation, voltage, current, or temperature) in excess of absolute maximum ratings. Do not exceed any of these ratings.

Note
54.+B is the positive battery voltage around 45 V.

26.2 Device-level specifications

Table 30 Recommended operating conditions

Spec ID	Parameter	Description	Min	Typ	Max	Unit	Details/conditions
SID40	V_{DDD}, V_{DDA}, V_{DDIO_1}, V_{DDIO_2},	Power supply voltage[55]	2.7[56]	–	5.5[57]	V	–
SID40A	$V_{DDIO_1_EFP}$	Power supply voltage for eFuse programming[58]	3	–	5.5	V	–
SID40B	V_{DDIO_3}	Power supply voltage	2.7	–	3.6	V	–
SID40C	V_{CCD}	External V_{CCD} power supply	1.10	1.15	1.20	V	External V_{CCD} power supply range when externally supplying V_{CCD}
SID41	C_{S1}	Smoothing capacitor[59, 60]	6.79	–	22	µF	–

Notes

55. V_{DDD}, V_{DDIO_1}, V_{DDIO_2}, V_{DDIO_3}, and V_{DDA} do not have any sequencing limitation and can establish in any order. These supplies (except V_{DDA} and V_{DDIO_2}) are independent in voltage level. See 12-Bit SAR ADC DC Specifications when using ADC units.
56. 3.0 V ±10% is supported with a lower BOD setting option for V_{DDD} and V_{DDA}. This setting provides robust protection for internal timing but BOD reset occurs at a voltage below the specified operating conditions. A higher BOD setting option is available (consistent with down to 3.0 V) and guarantees that all operating conditions are met.
57. 5.0 V ±10% is supported with a higher OVD setting option for V_{DDD} and V_{DDA}. This setting provides robust protection for internal and interface timing, but OVD reset occurs at a voltage above the specified operating conditions. A lower OVD setting option is available (consistent with up to 5.0 V) and guarantees that all operating conditions are met. Voltage overshoot to a higher OVD setting range for VDDD and VDDA is permissible, provided the duration is less than 2 hours cumulated. Note that during overshoot voltage condition electrical parameters are not guaranteed.
58. eFuse programming must be executed with the part in a “quiet” state, with minimal activity (preferably only JTAG or a single CAN channel on V_{DDD} domain, no activity on V_{DDIO_1}).
59. Smoothing capacitor, C_{S1} is required per chip (not per V_{CCD} pin). The V_{CCD} pins must be connected together to ensure a low-impedance connection (see the requirement in **Figure 16**).
60. Capacitors used for power supply decoupling or filtering are operated under a continuous DC-bias. Many capacitors used with DC power across them provide less than their target capacitance, and their capacitance is not constant across their working voltage range. When selecting capacitors for use with this device, ensure that the selected components provide the required capacitance under the specific operating conditions of temperature and voltage used in your design. While the temperature coefficient is normally found within a part’s catalog (such as, X7R, C0G, Y5V), the matching voltage coefficient may only be available on the component datasheet or direct from the manufacturer. Use of components that do not provide the required capacitance under the actual operating conditions may cause the device to operate to less than datasheet specifications.

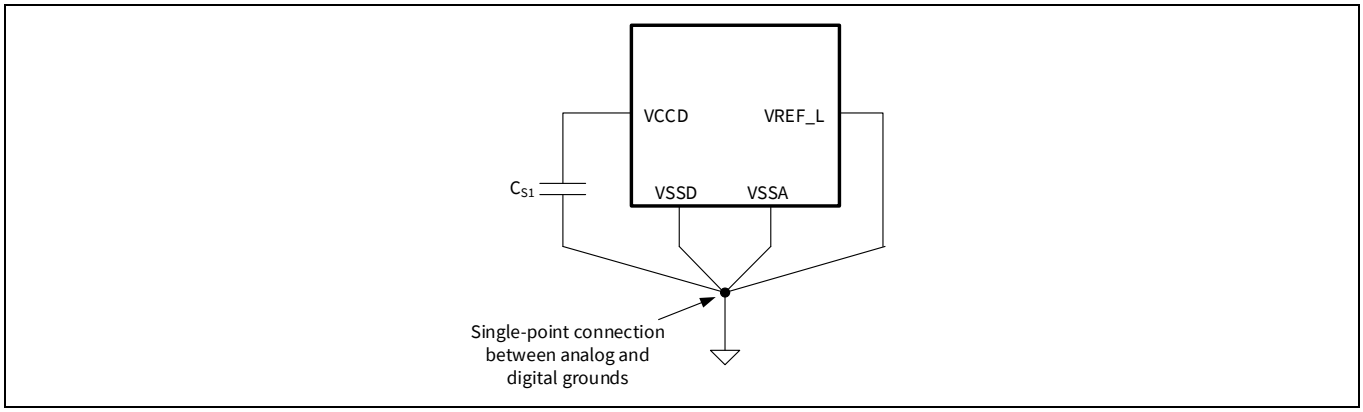

Figure 16 Smoothing capacitor

Smoothing capacitor should be placed as close as possible to the V_{CCD} pin.

26.3 Smoothing capacitor recommendations

Table 31 Smoothing capacitor connections

Package	C_{S1} @ pin pair
100-TEQFP	V_{CCD}: 89, V_{SSD}: 88
144-TEQFP	V_{CCD}: 127, V_{SSD}: 126
176-TEQFP	V_{CCD}: 156, V_{SSD}: 155
272-BGA	V_{CCD}: F13, V_{SSD}: G12

26.4 DC specifications

Table 32 DC specifications, CPU current, and transition time specifications

All specifications are valid for –40°C ≤ T_A ≤ 125°C and for 2.7 V to 5.5 V except where noted.

Spec ID	Parameter	Description	Min	Typ	Max	Unit	Details/conditions
Active/Sleep mode							
SID49C14	$I_{DD_VDDD_CM07_8_1_4M}$	V_{DDD} current in internal regulator mode, LPACTIVE mode (CM0+ and CM7_0 at 8 MHz, all peripherals are disabled)	–	9	13	mA	CM0+ and CM7_0 clocked at 8 MHz with IMO. CM7_1 powered off. All peripherals are disabled. No IO toggling. CM0+ and CM7_0 executing Dhrystone from flash with cache enabled. TYP: T_A = 25°C, V_{DDD} = 5.0 V, process typ (TT) MAX: T_A = 25°C, V_{DDD} = 5.5 V, process worst (FF)
SID49C4	$I_{DD_VDDD_CM07_8_4M}$	V_{DDD} current in internal regulator mode, LPACTIVE mode (CM0+ and CM7_0 at 8 MHz, all peripherals are enabled)	–	10	141	mA	CM0+ and CM7_0 clocked at 8 MHz with IMO. CM7_1 powered off. All peripherals are enabled. No IO toggling. CM0+ and CM7_0 executing Dhrystone from flash with cache enabled. M-DMA transferring data from code + work flash, P-DMA chains with maximum trigger activity. TYP: T_A = 25°C, V_{DDD} = 5.0 V, process typ (TT) MAX: T_A = 105°C, V_{DDD} = 5.5 V, process worst (FF)
SID49G1	$I_{DD1_VCCD_CM7_250}$	V_{CCD} current in external PMIC/transistor mode, Active mode (CM7_0 at 250 MHz, CM0+ at 80 MHz, all peripherals are enabled)	–	82	240	mA	PLL enabled at 250 MHz with ECO reference. All peripherals are enabled. No IO toggling. CM7_1 powered off. CM7_0 and CM0+ executing Dhrystone from flash with cache enabled. M-DMA transferring data from code + work flash, P-DMA chains with maximum trigger activity. TYP: T_A = 25 °C, V_{DDD} = 5.0 V, process typ (TT) MAX: T_A = 125°C, V_{DDD} = 5.5 V, process worst (FF)
SID49G2	$I_{DD1_VDDD_CM7_250}$	V_{DDD} current in external PMIC/transistor mode, Active mode (CM7_0 at 250 MHz, CM0+ at 80 MHz, all peripherals are enabled)	–	7	9	mA	PLL enabled at 250 MHz with ECO reference. All peripherals are enabled. No IO toggling. CM7_1 powered off. CM7_0 and CM0+ executing Dhrystone from flash with cache enabled. M-DMA transferring data from code + work flash, P-DMA chains with maximum trigger activity. TYP: T_A = 25°C, V_{DDD} = 5.0 V, process typ (TT) MAX: T_A = 125°C, V_{DDD} = 5.5 V, process worst (FF)

Table 32 DC specifications, CPU current, and transition time specifications *(continued)*

All specifications are valid for –40°C ≤ T_A ≤ 125°C and for 2.7 V to 5.5 V except where noted.

Spec ID	Parameter	Description	Min	Typ	Max	Unit	Details/conditions
SID50G1	$I_{DD1_VC-CD_F250}$	V_{CCD} current in external PMIC/transistor mode, Active mode (CM7 CPUs at 250 MHz, CM0+ at 80 MHz, all peripherals are enabled)	–	124	287	mA	PLL enabled at 250 MHz with ECO reference. All peripherals are enabled. No IO toggling. CM7 CPUs and CM0+ executing Dhrystone from flash with cache enabled. M-DMA transferring data from code + work flash, P-DMA chains with maximum trigger activity. TYP: T_A = 25°C, V_{DDD} = 5.0 V, process typ (TT) MAX: T_A = 125°C, V_{DDD} = 5.5 V, process worst (FF)
SID50G2	$I_{DD1_-VDDD_F250}$	V_{DDD} current in external PMIC/transistor mode, Active mode (CM7 CPUs at 250 MHz, CM0+ at 80 MHz, all peripherals are enabled)	–	7	9.3	mA	PLL enabled at 250 MHz with ECO reference. All peripherals are enabled. No IO toggling. CM7 CPUs and CM0+ executing Dhrystone from flash with cache enabled. M-DMA transferring data from code + work flash, P-DMA chains with maximum trigger activity. TYP: T_A = 25°C, V_{DDD} = 5.0 V, process typ (TT) MAX: T_A = 125°C, V_{DDD} = 5.5 V, process worst (FF)
SID53A4	$I_{DD2_8_-VDDD_4M}$	V_{DDD} current in internal regulator mode. CM7_1=OFF, Other CPUs in Sleep	–	7	140	mA	IMO clocked at 8 MHz. All peripherals, PLL, FLL, peripheral clocks, interrupts, CSV, DMA are disabled. No IO toggling. TYP: T_A = 25°C, V_{DDD} = 5.0 V, process typ (TT) MAX: T_A = 105°C, V_{DDD} = 5.5 V, process worst (FF)

Table 32 DC specifications, CPU current, and transition time specifications *(continued)*

All specifications are valid for –40°C ≤ T_A ≤ 125°C and for 2.7 V to 5.5 V except where noted.

Spec ID	Parameter	Description	Min	Typ	Max	Unit	Details/conditions
SID58A	I_{DD_CWU2}	Average current for cyclic wake-up operation. This is the average current for the specified LPACTIVE mode and Deep Sleep mode (RTC, WDT, and Event Generator operating).	–	60	198	µA	T_A = 25 °C, 64-KB SRAM retention, Event generator operates with ILO0 in Deep Sleep and LP Active, Smart I/O operates with ILO0, CM0+, CM7_0: Retain, CM7_1: OFF. TYP: V_{DDD} = 5.0 V, process typ (TT) MAX: V_{DDD} = 5.5 V, process worst (FF) This average current is achieved under the following conditions. 1. MCU repetitively goes from Deep Sleep to LP Active with a period of 32 ms. 2. One of the I/Os is toggled using Smart I/O to activate an external sensor connected to an analog input of A/D in Deep Sleep 3. After 200 µs delay, the CM7_0 wakes up by Event generator trigger to LP Active mode with IMO and A/D conversion is triggered by software. 4. Group A/D conversion is performed on 5 channels with the sampling time of 1 µs each. 5. Once the group A/D conversion is finished, and the results fit in the window of the range comparator, the I/O is toggled back by software to de-activate the sensor and the CM7_0 goes back to Deep Sleep.
Deep Sleep mode							
SID64A	I_{DD_DS64A}	64-KB SRAM retention, ILO0 operation	–	50	138	µA	Deep Sleep Mode (RTC, WDT and event generator operating, all other peripherals are off except for retention registers) CM0+, CM7_0: Retained T_A = 25 °C TYP: V_{DDD} = 5.0 V, process typ (TT) MAX: V_{DDD} = 5.5 V, process worst (FF)
SID64C	I_{DD_DS64C}	64 KB SRAM retention, ILO0 operation	–	1.4	5.5	mA	Deep Sleep Mode steady state at T_A = 125 °C (RTC, WDT, and event generator operating, all other peripherals are off except for retention registers), CM0+, CM7_0: Retained Typ: V_{DDD} = 5.0 V process worst (TT) Max: V_{DDD} = 5.5 V process worst (FF)
Hibernate mode							
SID66	I_{DD_HIB1}	Hibernate Mode	–	8	–	µA	ILO0/WDT operating. All other peripherals, and CPUs are off. T_A = 25°C, V_{DDD} = 5.0 V, Process typ (TT)
SID66A	I_{DD_HIB2}	Hibernate Mode	–	–	180	µA	ILO0/WDT operating. All other peripherals, and CPUs are off. T_A = 125°C, V_{DDD} = 5.5 V, Process worst (FF)

Table 32 DC specifications, CPU current, and transition time specifications *(continued)*

All specifications are valid for –40°C ≤ T_A ≤ 125°C and for 2.7 V to 5.5 V except where noted.

Spec ID	Parameter	Description	Min	Typ	Max	Unit	Details/conditions
Power mode transition times							
SID69	t_{ACT_DS}	Power down time from Active to Deep Sleep	–	–	2.8	µs	When the IMO is already running and all HFCLK roots are at least 8 MHz. HFCLK roots that are slower than this will require additional time to turn off.
SID67	t_{DS_ACT}	Deep Sleep to Active transition time (IMO clock)	–	–	10[61]	µs	When using the 8-MHz IMO. Measured from wakeup interrupt during Deep Sleep until wakeup.
SID67C	t_{DS_ACT1}	Deep Sleep to Active transition time (IMO clock, flash execution)	–	–	26[61]	µs	When using the 8-MHz IMO. Measured from wakeup interrupt during Deep Sleep until flash execution.
SID67A	$t_{DS_ACT_FLL}$	Deep Sleep to Active transition time (FLL clock)	–	–	15[61]	µs	When using the FLL to generate 96 MHz from the 8-MHz IMO. Measured from wakeup interrupt during Deep Sleep until the FLL locks.
SID67D	$t_{DS_ACT_FLL1}$	Deep Sleep to Active transition time (FLL clock, flash execution)	–	–	26[61]	µs	When using the FLL to generate 96 MHz from the 8-MHz IMO. Measured from wakeup interrupt during Deep Sleep until flash execution.
SID67B	$t_{DS_ACT_PLL}$	Deep Sleep to Active transition time (PLL clock)	–	–	60[61]	µs	When using the PLL to generate 96 MHz from the 8-MHz IMO. Measured from wakeup interrupt during Deep Sleep until the PLL locks.
SID68	t_{HVR_ACT}	Release time from HV reset (POR, BOD, OVD, OCD, WDT, Hibernate wakeup, or XRES_L) release until CM0+ begins executing ROM boot	–	–	265	µs	Without boot runtime, guaranteed by design
SID68A	t_{LVR_ACT}	Release time from LV reset (Fault, Internal system reset, MCWDT, or CSV) during Active/Sleep until CM0+ begins executing ROM boot	–	–	10	µs	Without boot runtime. Guaranteed by design
SID68B	t_{LVR_DS}	Release time from LV reset (Fault, or MCWDT) during DeepSleep until CM0+ begins executing ROM boot	–	–	15	µs	Without boot runtime. Guaranteed by design
SID80A	t_{RB_N}	ROM boot startup time or wakeup time from hibernate in NORMAL protection state	–	–	1640	µs	Guaranteed by Design, CM0+ clocked at 100 MHz (Flash boot version 3.1.0.554 and later)
SID80B	t_{RB_S}	ROM boot startup time or wakeup time from hibernate in SECURE protection state	–	–	2330	µs	Guaranteed by Design, TOC2_FLAGS = 0x2CF, CM0+ clocked at 100 MHz (Flash boot version 3.1.0.554 and later)
SID81A	t_{FB}	Flash boot startup time or wakeup time from hibernate in NORMAL/SECURE protection state	–	–	80	µs	Guaranteed by Design, TOC2_FLAGS = 0x2CF, CM0+ clocked at 100 MHz, (Flash boot version 3.1.0.554 and later), Listen window = 0 ms
SID80A_2	$t_{RB_N_2}$	ROM boot startup time or wakeup time from hibernate in NORMAL protection state	–	–	2640	µs	Guaranteed by Design, CM0+ clocked at 50 MHz (Flash boot version earlier than 3.1.0.554)

Table 32 DC specifications, CPU current, and transition time specifications *(continued)*

All specifications are valid for –40°C ≤ T_A ≤ 125°C and for 2.7 V to 5.5 V except where noted.

Spec ID	Parameter	Description	Min	Typ	Max	Unit	Details/conditions
SID80B_2	$t_{RB_S_2}$	ROM boot startup time or wakeup time from hibernate in SECURE protection state	–	–	3890	µs	Guaranteed by Design, CM0+ clocked at 50 MHz (Flash boot version earlier than 3.1.0.554)
Note 61.At cold temperature -5°C to -40°C, the Deep Sleep to Active transition time can be higher than the max time indicated by as much as 20 us.							
SID81A_2	t_{FB_2}	Flash boot startup time or wakeup time from hibernate in NORMAL/SECURE protection state	–	–	200	µs	Guaranteed by Design, TOC2_-FLAGS=0x2CF, CM0+ clocked at 50 MHz (Flash boot version earlier than 3.1.0.554), Listen window = 0 ms
SID81B_2	$t_{FB_A_2}$	Flash boot with app authentication time in NORMAL/SECURE protection state	–	–	10000	µs	Guaranteed by Design, TOC2_-FLAGS=0x24F, CM0+ clocked at 50 MHz (Flash boot version earlier than 3.1.0.554), Listen window = 0 ms, Public key exponent e = 0x010001, App size is 64 KB with the last 256 bytes being a digital signature in RSASSA-PKCS1-v1.5. Valid for RSA2K.
SID81B	t_{FB_A}	Flash boot with app authentication time in NORMAL/SECURE protection state	–	–	5000	µs	Guaranteed by Design, TOC2_-FLAGS=0x24F, CM0+ clocked at 100 MHz (Flash boot version 3.1.0.554 and later), Listen window = 0 ms, Public key exponent e = 0x010001, App size is 64 KB with the last 256 bytes being a digital signature in RSASSA-PKCS1-v1.5. Valid for RSA2K.
Regulator specifications							
SID600	V_{CCD}	Core supply voltage (transient range)	1.05	1.1	1.15	V	–
SID600A	V_{CCD_S}	Core supply voltage (static range, no load)	1.075	1.1	1.125	V	Guaranteed by design
SID601	I_{DDD_ACT}	Regulator operating current in Active/Sleep mode	–	900	1500	µA	Guaranteed by design
SID602	I_{DDD_DPSLP}	Regulator operating current in Deep Sleep mode	–	1.5	20	µA	Guaranteed by design
SID603	I_{RUSH}	Inrush current	–	–	850	mA	Average V_{DDD} current until C_{s1} (connected to V_{CCD} pin) is charged after Active regulator is turned on
SID604	I_{ILDOUT}	Internal regulator output current for operation	–	–	300	mA	
SID605	I_{HCROUT}	High current regulator output current for operation	–	–	600	mA	Using an external pass transistor
SID606	V_{OL_HCR}	Output voltage LOW level for external PMIC enable output (EXT_PS_CTL1)	–	–	0.5	V	I_{OL} = 1 mA
SID606A	V_{OH_HCR}	Output voltage HIGH level for external PMIC enable output (EXT_PS_CTL1)	V_{DDD} – 0.5	–	–	V	I_{OH} = –1 mA

Table 32 DC specifications, CPU current, and transition time specifications *(continued)*

All specifications are valid for –40°C ≤ T_A ≤ 125°C and for 2.7 V to 5.5 V except where noted.

Spec ID	Parameter	Description	Min	Typ	Max	Unit	Details/conditions
SID607	V_{IH_HCR}	Input voltage HIGH threshold for external PMIC power OK input (EXT_PS_CTL0)	0.7 × V_{DDD}	–	–	V	–
SID607A	V_{IL_HCR}	Input voltage LOW threshold for external PMIC power OK input (EXT_PS_CTL0)	–	–	0.3 × V_{DDD}	V	–
SID607B	V_{HYS_HCR}	Hysteresis for external PMIC power OK input (EXT_PS_CTL0)	0.05 × V_{DDD}	–	–	V	–
SID608	I_{DRV_OUT}	DRV_VOUT pin output current to external NPN base current	–	–	9	mA	See architecture reference manual for external NPN transistor selection

26.5 Reset specifications

Table 33 XRES_L reset

Spec ID	Parameter	Description	Min	Typ	Max	Unit	Details/conditions
XRES_L DC specifications							
SID73	I_{IDD_XRES}	I_{DD} when XRES_L asserted	–	–	2.5	mA	MAX: T_A = 125°C, V_{DDD} = 5.5 V, V_{CCD} = 1.15 V, process worst (FF)
SID74	V_{IH}	Input voltage HIGH threshold	0.7 × V_{DDD}	–	–	V	CMOS Input
SID75	V_{IL}	Input voltage LOW threshold	–	–	0.3 × V_{DDD}	V	CMOS Input
SID76	R_{PULLUP}	Pull-up resistor	7	–	20	kΩ	–
SID77	C_{IN}	Input capacitance	–	–	5	pF	–
SID78	$V_{HYSXRES}$	Input voltage hysteresis	0.05 × V_{DDD}	–	–	V	–
XRES_L AC specifications							
SID70	t_{XRES_ACT}	XRES_L deasserted to Active transition time	–	–	265	µs	Without boot runtime Guaranteed by design
SID71	t_{XRES_PW}	XRES_L pulse width	5	–	–	µs	–
SID72	t_{XRES_FT}	Pulse suppression width	100	–	–	ns	–

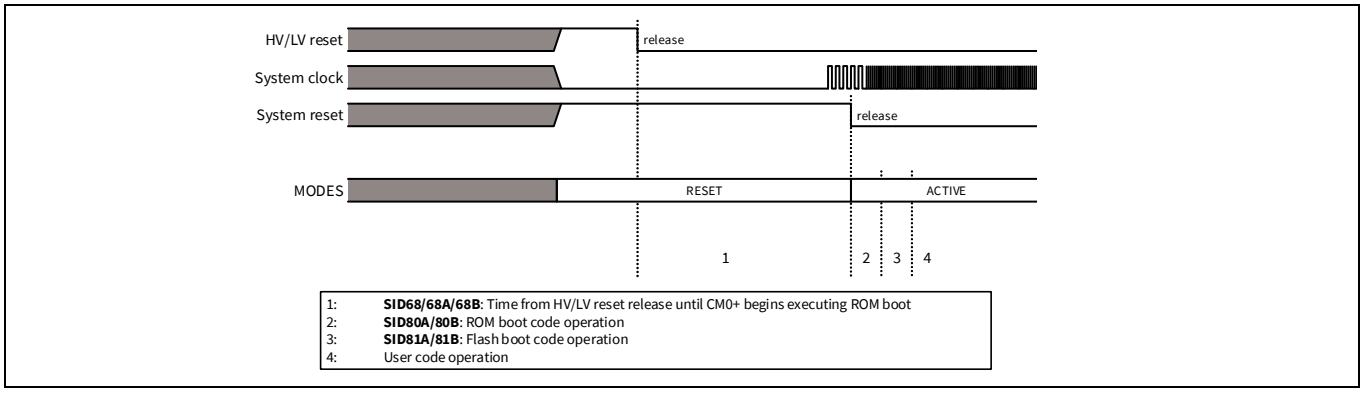

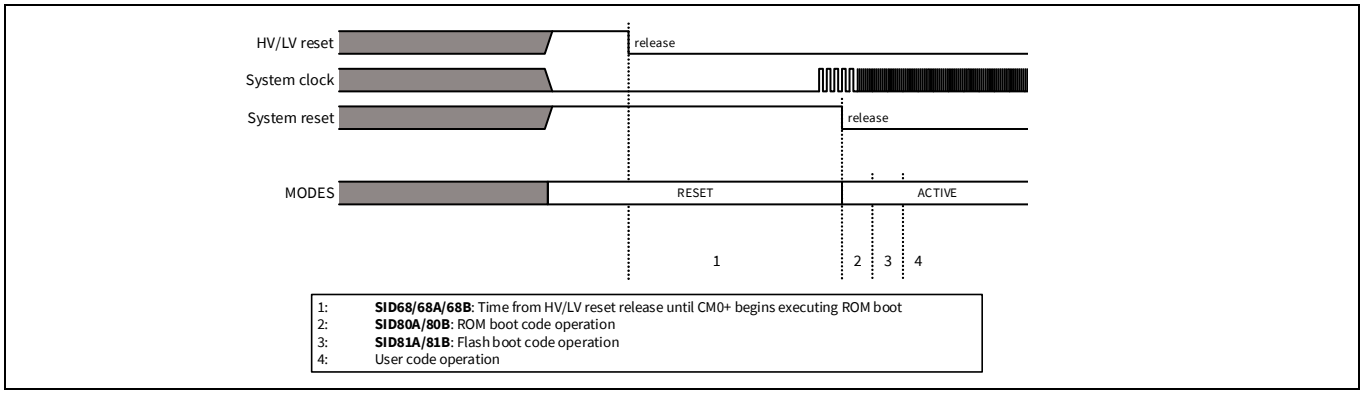

Figure 17 Reset sequence

26.6 I/O

Table 34 I/O specifications

Spec ID	Parameter	Description	Min	Typ	Max	Unit	Details/conditions
GPIO_STD Specifications for ports P1 through P23, P26 to P32							
SID650	$V_{OL1_GPIO_STD}$	Output voltage LOW level	–	–	0.6	V	I_{OL} = 6 mA drive_sel<1:0> = 0b0X, 4.5 V ≤ V_{DDD} or V_{DDIO_1} or V_{DDIO_2} ≤ 5.5 V
SID650C	$V_{OL1C_GPIO_STD}$	Output voltage LOW level	–	–	0.4	V	I_{OL} = 5 mA drive_sel<1:0> = 0b0X, 4.5 V ≤ V_{DDD} or V_{DDIO_1} or V_{DDIO_2} ≤ 5.5 V
SID651	$V_{OL2_GPIO_STD}$	Output voltage LOW level	–	–	0.4	V	I_{OL} = 2 mA drive_sel<1:0> = 0b0X, 2.7 V ≤ V_{DDD} or V_{DDIO_1} or V_{DDIO_2} < 4.5 V
SID652	$V_{OL3_GPIO_STD}$	Output voltage LOW level	–	–	0.4	V	I_{OL} = 1 mA drive_sel<1:0> = 0b10, 2.7 V ≤ V_{DDD} or V_{DDIO_1} or V_{DDIO_2} < 4.5 V
SID652C	$V_{OL3C_GPIO_STD}$	Output voltage LOW level	–	–	0.4	V	I_{OL} = 2 mA drive_sel<1:0> = 0b10, 4.5 V ≤ V_{DDD} or V_{DDIO_1} or V_{DDIO_2} ≤ 5.5 V
SID653	$V_{OL4_GPIO_STD}$	Output voltage LOW level	–	–	0.4	V	I_{OL} = 0.5 mA drive_sel<1:0> = 0b11, 2.7 V ≤ V_{DDD} or V_{DDIO_1} or V_{DDIO_2} < 4.5 V
SID653C	$V_{OL4C_GPIO_STD}$	Output voltage LOW level	–	–	0.4	V	I_{OL} = 1 mA drive_sel<1:0> = 0b11, 4.5 V ≤ V_{DDD} or V_{DDIO_1} or V_{DDIO_2} ≤ 5.5 V
SID654	$V_{OH1_GPIO_STD}$	Output voltage HIGH level	(V_{DDD}, V_{DDIO_1}, or V_{DDIO_2}) – 0.5	–	–	V	I_{OH} = –2 mA drive_sel<1:0> = 0b0X, 2.7 V ≤ V_{DDD} or V_{DDIO_1} or V_{DDIO_2} < 4.5 V
SID655	$V_{OH2_GPIO_STD}$	Output voltage HIGH level	(V_{DDD}, V_{DDIO_1}, or V_{DDIO_2}) – 0.5	–	–	V	I_{OH} = –5 mA drive_sel<1:0> = 0b0X, 4.5 V ≤ V_{DDD} or V_{DDIO_1} or V_{DDIO_2} ≤ 5.5 V
SID656	$V_{OH3_GPIO_STD}$	Output voltage HIGH level	(V_{DDD}, V_{DDIO_1}, or V_{DDIO_2}) – 0.5	–	–	V	I_{OH} = –1 mA drive_sel<1:0> = 0b10, 2.7 V ≤ (V_{DDD}, V_{DDIO_1}, or V_{DDIO_2}) < 4.5 V
SID656C	$V_{OH3C_GPIO_STD}$	Output voltage HIGH level	(V_{DDD}, V_{DDIO_1}, or V_{DDIO_2}) – 0.5	–	–	V	I_{OH} = –2 mA drive_sel<1:0> = 0b10, 4.5 V ≤ (V_{DDD}, V_{DDIO_1}, or V_{DDIO_2}) ≤ 5.5 V
SID657	$V_{OH4_GPIO_STD}$	Output voltage HIGH level	(V_{DDD}, V_{DDIO_1}, or V_{DDIO_2}) – 0.5	–	–	V	I_{OH} = –0.5 mA drive_sel<1:0> = 0b11, 2.7 V ≤ (V_{DDD}, V_{DDIO_1}, or V_{DDIO_2}) < 4.5 V
SID657C	$V_{OH4C_GPIO_STD}$	Output voltage HIGH level	(V_{DDD}, V_{DDIO_1}, or V_{DDIO_2}) – 0.5	–	–	V	I_{OH} = –1 mA drive_sel<1:0> = 0b11, 4.5 V ≤ (V_{DDD}, V_{DDIO_1}, or V_{DDIO_2}) ≤ 5.5 V
SID658	$R_{PD_GPIO_STD}$	Pull-down resistance	25	50	100	kΩ	–
SID659	$R_{PU_GPIO_STD}$	Pull-up resistance	25	50	100	kΩ	–
SID660	$V_{IH_CMOS_GPIO_STD}$	Input voltage HIGH threshold in CMOS mode	0.7 × (V_{DDD}, V_{DDIO_1}, or V_{DDIO_2})	–	–	V	–
SID661	$V_{IH_TTL_GPIO_STD}$	Input voltage HIGH threshold in TTL mode	2.0	–	–	V	–

Table 34 I/O specifications *(continued)*

Spec ID	Parameter	Description	Min	Typ	Max	Unit	Details/conditions
SID662	$V_{IH_AUTO_GPIO_STD}$	Input voltage HIGH threshold in AUTO mode	0.8 × (V_{DDD}, V_{DDIO_1}, or V_{DDIO_2})	–	–	V	–
SID663	$V_{IL_CMOS_GPIO_STD}$	Input voltage LOW threshold in CMOS mode	–	–	0.3 × (V_{DDD}, V_{DDIO_1}, or V_{DDIO_2})	V	–
SID664	$V_{IL_TTL_GPIO_STD}$	Input voltage LOW threshold in TTL mode	–	–	0.8	V	–
SID665	$V_{IL_AUTO_GPIO_STD}$	Input voltage LOW threshold in AUTO mode	–	–	0.5 × (V_{DDD}, V_{DDIO_1}, or V_{DDIO_2})	V	–
SID666	$V_{HYST_CMOS_GPIO_STD}$	Hysteresis in CMOS mode	0.05 × (V_{DDD}, V_{DDIO_1}, or V_{DDIO_2})	–	–	V	–
SID668	$V_{HYST_AUTO_GPIO_STD}$	Hysteresis in AUTO mode	0.05 × (V_{DDD}, V_{DDIO_1}, or V_{DDIO_2})	–	–	V	–
SID669	$C_{in_GPIO_STD}$	Input pin capacitance	–	–	5	pF	For 10 MHz and 100 MHz
SID670	$I_{IL_GPIO_STD}$	Input leakage current	–250	0.02	250	nA	For GPIO_STD except P21.0, P21.1, P21.2, P21.3, P21.4, P22.1, P22.2, P22.3, P23.3, P23.4. $V_{DDIO_1} = V_{DDIO_2} = V_{DDD} = V_{DDA}$ = 5.5 V, $V_{SSD} < V_I < V_{DDD}$, V_{DDIO_1}, V_{DDIO_2} –40 °C ≤ T_A ≤ 125°C Typ: T_A = 25°C, $V_{DDIO_1} = V_{DDIO_2} = V_{DDD} = V_{DDA}$ = 5.0 V
SID670C	$I_{IL_GPIO_STD_B}$	Input leakage current	–700	0.02	700	nA	Only for P21.0, P21.1, P21.2, P21.3, P21.4, P22.1, P22.2, P22.3, P23.3, P23.4. $V_{DDIO_1} = V_{DDIO_2} = V_{DDD} = V_{DDA}$ = 5.5 V, $V_{SSD} < V_I < V_{DDD}$, V_{DDIO_1}, V_{DDIO_2} –40°C ≤ T_A ≤ 125°C Typ: T_A = 25 °C, $V_{DDIO_1} = V_{DDIO_2} = V_{DDD} = V_{DDA}$ = 5.0 V
SID671	t_R or t_F (fast)$_{_20_0_GPIO_STD}$	Rise time or fall time (10% to 90% of V_{DDIO})	1	–	10	ns	20-pF load, drive_sel<1:0> = 0b00
SID672	t_R or t_F (fast)$_{_50_0_GPIO_STD}$	Rise time or fall time (10% to 90% of V_{DDIO})	1	–	20	ns	50-pF load, drive_sel<1:0> = 0b00
SID673	t_R or t_F (fast)$_{_20_1_GPIO_STD}$	Rise time or fall time (10% to 90% of V_{DDIO})	1	–	20	ns	20-pF load, drive_sel<1:0> = 0b01
SID674	t_R or t_F (fast)$_{_10_2_GPIO_STD}$	Rise time or fall time (10% to 90% of V_{DDIO})	1	–	20	ns	10-pF load, drive_sel<1:0> = 0b10
SID675	t_R or t_F (fast)$_{_6_3_GPIO_STD}$	Rise time or fall time (10% to 90% of V_{DDIO})	1	–	20	ns	6-pF load, drive_sel<1:0> = 0b11
SID676	t_F (fast)$_{_100_GPIO_STD}$	Fall time (30% to 70% of V_{DDIO})	0.35	–	250	ns	10-pF to 400-pF load, RPU = 767 Ω, drive_sel<1:0>= 0b00, Freq = 100 kHz
SID677	t_F (fast)$_{_400_GPIO_STD}$	Fall time (30% to 70% of V_{DDIO})	0.35	–	250	ns	10-pF to 400-pF load, RPU = 350 Ω, drive_sel<1:0>= 0b00, Freq = 400 kHz
SID678	$f_{IN_GPIO_STD}$	Input frequency	–	–	100	MHz	–
SID679	$f_{OUT_GPIO_STD0H}$	Output frequency	–	–	50	MHz	20-pF load, drive_sel<1:0>= 00, 4.5 V ≤ V_{DDD} or V_{DDIO_1} or V_{DDIO_2} ≤ 5.5 V

Table 34 I/O specifications *(continued)*

Spec ID	Parameter	Description	Min	Typ	Max	Unit	Details/conditions
SID680	$f_{OUT_GPIO_STD0L}$	Output frequency	–	–	32	MHz	20-pF load, drive_sel<1:0>= 00, 2.7 V ≤ V_{DDD} or V_{DDIO_1} or V_{DDIO_2} < 4.5 V
SID681	$f_{OUT_GPIO_STD1H}$	Output frequency	–	–	25	MHz	20-pF load, drive_sel<1:0>= 01, 4.5 V ≤ V_{DDD} or V_{DDIO_1} or V_{DDIO_2} ≤ 5.5 V
SID682	$f_{OUT_GPIO_STD1L}$	Output frequency	–	–	15	MHz	20-pF load, drive_sel<1:0>= 01, 2.7 V ≤ V_{DDD} or V_{DDIO_1} or V_{DDIO_2} < 4.5 V
SID683	$f_{OUT_GPIO_STD2H}$	Output frequency	–	–	25	MHz	10-pF load, drive_sel<1:0>= 10, 4.5 V ≤ V_{DDD} or V_{DDIO_1} or V_{DDIO_2} ≤ 5.5 V
SID684	$f_{OUT_GPIO_STD2L}$	Output frequency	–	–	15	MHz	10-pF load, drive_sel<1:0>= 10, 2.7 V ≤ V_{DDD} or V_{DDIO_1} or V_{DDIO_2} < 4.5 V
SID685	$f_{OUT_GPIO_STD3H}$	Output frequency	–	–	15	MHz	6-pF load, drive_sel<1:0>= 11, 4.5 V ≤ V_{DDD} or V_{DDIO_1} or V_{DDIO_2} ≤ 5.5 V
SID686	$f_{OUT_GPIO_STD3L}$	Output frequency	–	–	10	MHz	6-pF load, drive_sel<1:0>= 11, 2.7 V ≤ V_{DDD} or V_{DDIO_1} or V_{DDIO_2} < 4.5 V
GPIO_ENH specifications for P0							
SID650A	$V_{OL1_GPIO_ENH}$	Output voltage LOW level	–	–	0.6	V	I_{OL} = 6 mA drive_sel<1:0> = 0b0X, 2.7 V ≤ V_{DDD} ≤ 5.5 V
SID650D	$V_{OL1D_GPIO_ENH}$	Output voltage LOW level	–	–	0.4	V	I_{OL} = 5 mA drive_sel<1:0> = 0b0X, 4.5 V ≤ V_{DDD} ≤ 5.5 V
SID651A	$V_{OL2_GPIO_ENH}$	Output voltage LOW level	–	–	0.4	V	I_{OL} = 2 mA drive_sel<1:0> = 0b0X, 2.7 V ≤ V_{DDD} < 4.5 V
SID652A	$V_{OL3_GPIO_ENH}$	Output voltage LOW level	–	–	0.4	V	I_{OL} = 1 mA drive_sel<1:0> = 0b10, 2.7 V ≤ V_{DDD} < 4.5 V
SID652D	$V_{OL3D_GPIO_ENH}$	Output voltage LOW level	–	–	0.4	V	I_{OL} = 2 mA drive_sel<1:0> = 0b10, 4.5 V ≤ V_{DDD} ≤ 5.5 V
SID653A	$V_{OL4_GPIO_ENH}$	Output voltage LOW level	–	–	0.4	V	I_{OL} = 0.5 mA drive_sel<1:0> = 0b11, 2.7 V ≤ V_{DDD} < 4.5 V
SID653D	$V_{OL4D_GPIO_ENH}$	Output voltage LOW level	–	–	0.4	V	I_{OL} = 1 mA drive_sel<1:0> = 0b11, 4.5 V ≤ V_{DDD} ≤ 5.5 V
SID654A	$V_{OH1_GPIO_ENH}$	Output voltage HIGH level	V_{DDD} – 0.5	–	–	V	I_{OH} = –2 mA drive_sel<1:0> = 0b0X, 2.7 V ≤ V_{DDD} < 4.5 V
SID655A	$V_{OH2_GPIO_ENH}$	Output voltage HIGH level	V_{DDD} – 0.5	–	–	V	I_{OH} = –5 mA drive_sel<1:0> = 0b0X, 4.5 V ≤ V_{DDD} ≤ 5.5 V
SID656A	$V_{OH3_GPIO_ENH}$	Output voltage HIGH level	V_{DDD} – 0.5	–	–	V	I_{OH} = –1 mA drive_sel<1:0> = 0b10, 2.7 V ≤ V_{DDD} < 4.5 V
SID656D	$V_{OH3D_GPIO_ENH}$	Output voltage HIGH level	V_{DDD} – 0.5	–	–	V	I_{OH} = –2 mA drive_sel<1:0> = 0b10, 4.5 V ≤ V_{DDD} ≤ 5.5 V

Table 34 I/O specifications *(continued)*

Spec ID	Parameter	Description	Min	Typ	Max	Unit	Details/conditions
SID657A	$V_{OH4_GPIO_ENH}$	Output voltage HIGH level	V_{DDD} – 0.5	–	–	V	I_{OH} = –0.5 mA drive_sel<1:0> = 0b11, 2.7 V ≤ V_{DDD} < 4.5 V
SID657D	$V_{OH4D_GPIO_ENH}$	Output voltage HIGH level	V_{DDD} – 0.5	–	–	V	I_{OH} = –1 mA drive_sel<1:0> = 0b11, 4.5 V ≤ V_{DDD} ≤ 5.5 V
SID658A	$R_{PD_GPIO_ENH}$	Pull-down resistance	25	50	100	kΩ	–
SID659A	$R_{PU_GPIO_ENH}$	Pull-up resistance	25	50	100	kΩ	–
SID660A	$V_{IH_CMOS_GPIO_ENH}$	Input voltage HIGH threshold in CMOS mode	0.7 × V_{DDD}	–	–	V	–
SID661A	$V_{IH_TTL_GPIO_ENH}$	Input voltage HIGH threshold in TTL mode	2.0	–	–	V	–
SID662A	$V_{IH_AUTO_GPIO_ENH}$	Input voltage HIGH threshold in AUTO mode	0.8 × V_{DDD}	–	–	V	–
SID663A	$V_{IL_CMOS_GPIO_ENH}$	Input voltage LOW threshold in CMOS mode	–	–	0.3 × V_{DDD}	V	–
SID664A	$V_{IL_TTL_GPIO_ENH}$	Input voltage LOW threshold in TTL mode	–	–	0.8	V	–
SID665A	$V_{IL_AUTO_GPIO_ENH}$	Input voltage LOW threshold in AUTO mode	–	–	0.5 × V_{DDD}	V	–
SID666A	$V_{HYST_CMOS_GPIO_ENH}$	Hysteresis in CMOS mode	0.05 × V_{DDD}	–	–	V	–
SID668A	$V_{HYST_AUTO_GPIO_ENH}$	Hysteresis in AUTO mode	0.05 × V_{DDD}	–	–	V	–
SID669A	$C_{in_GPIO_ENH}$	Input pin capacitance	–	–	5	pF	For 10 MHz and 100 MHz
SID670A	$I_{IL_GPIO_ENH}$	Input leakage current	–350	0.055	350	nA	V_{DDD} = V_{DDA} = 5.5 V, V_{SSD} < V_I < V_{DDD} –40 °C ≤ T_A ≤ 125°C TYP: T_A = 25°C, V_{DDD} = V_{DDA} = 5.0 V
SID671A	t_R or t_F (fast)$_{_20_0_GPIO_ENH}$	Rise time or fall time (10% to 90% of V_{DDIO})	1	–	10	ns	20-pF load, drive_sel<1:0> = 0b00, slow = 0
SID672A	t_R or t_F (fast)$_{_50_0_GPIO_ENH}$	Rise time or fall time (10% to 90% of V_{DDIO})	1	–	20	ns	50-pF load, drive_sel<1:0> = 0b00, slow = 0
SID673A	t_R or t_F (fast)$_{_20_1_GPIO_ENH}$	Rise time or fall time (10% to 90% of V_{DDIO})	1	–	20	ns	20-pF load, drive_sel<1:0> = 0b01, slow = 0
SID674A	t_R or t_F (fast)$_{_10_2_GPIO_ENH}$	Rise time or fall time (10% to 90% of V_{DDIO})	1	–	20	ns	10-pF load, drive_sel<1:0> = 0b10, slow = 0
SID675A	t_R or t_F (fast)$_{_6_3_GPIO_ENH}$	Rise time or fall time (10% to 90% of V_{DDIO})	1	–	20	ns	6-pF load, drive_sel<1:0> = 0b11, slow = 0
SID676A	t_{F_I2C} (slow)$_{_GPIO_ENH}$	Fall time (30% to 70% of V_{DDIO})	20 × (V_{DDD} / 5.5)	–	250	ns	10-pF to 400-pF load, drive_sel<1:0> = 0b00, slow = 1, minimum R_{PU} = 400 Ω
SID677A	t_R or t_F (slow)$_{_20_GPIO_ENH}$	Rise time or fall time (10% to 90% of V_{DDIO})	20 × (V_{DDD} / 5.5)	–	160	ns	20-pF load, drive_sel<1:0> = 0b00, slow = 1, output frequency = 1 MHz
SID678A	t_R or t_F (slow)$_{_400_GPIO_ENH}$	Rise time or fall time (10% to 90% of V_{DDIO})	20 × (V_{DDD} / 5.5)	–	250	ns	400-pF load, drive_sel<1:0> = 0b00, slow = 1, output frequency = 400 kHz
SID679A	$f_{IN_GPIO_ENH}$	Input frequency	–	–	100	MHz	–
SID680A	$f_{OUT_GPIO_ENH0H}$	Output frequency	–	–	50	MHz	20-pF load, drive_sel<1:0>= 0b00, 4.5 V ≤ V_{DDD} ≤ 5.5 V

Table 34 I/O specifications *(continued)*

Spec ID	Parameter	Description	Min	Typ	Max	Unit	Details/conditions
SID681A	$f_{OUT_GPIO_ENH0L}$	Output frequency	–	–	32	MHz	20-pF load, drive_sel<1:0>= 0b00, 2.7 V ≤ V_{DDD} < 4.5 V
SID682A	$f_{OUT_GPIO_ENH1H}$	Output frequency	–	–	25	MHz	20-pF load, drive_sel<1:0>= 0b01, 4.5 V ≤ V_{DDD} ≤ 5.5 V
SID683A	$f_{OUT_GPIO_ENH1L}$	Output frequency	–	–	15	MHz	20-pF load, drive_sel<1:0>= 0b01, 2.7 V ≤ V_{DDD} < 4.5 V
SID684A	$f_{OUT_GPIO_ENH2H}$	Output frequency	–	–	25	MHz	10-pF load, drive_sel<1:0>= 0b10, 4.5 V ≤ V_{DDD} ≤ 5.5 V
SID685A	$f_{OUT_GPIO_ENH2L}$	Output frequency	–	–	15	MHz	10-pF load, drive_sel<1:0>= 0b10, 2.7 V ≤ V_{DDD} < 4.5 V
SID686A	$f_{OUT_GPIO_ENH3H}$	Output frequency	–	–	15	MHz	6-pF load, drive_sel<1:0>= 0b11, 4.5 V ≤ V_{DDD} ≤ 5.5 V
SID687A	$f_{OUT_GPIO_ENH3L}$	Output frequency	–	–	10	MHz	6-pF load, drive_sel<1:0>= 0b11, 2.7 V ≤ V_{DDD} < 4.5 V
HSIO specifications for ports P24, P25							
SID651B	$V_{OL_HB_HSSPI}$	Output LOW voltage	–	–	0.2	V	I_{OL} = 0.1 mA, drive_sel<1:0> = 0b00
SID652B	V_{OL_eMMC}	Output LOW voltage	–	–	0.125 × V_{DDIO_3}	V	I_{OL} = 0.1 mA, drive_sel<1:0> = 0b00
SID653B	V_{OL_SD}	Output LOW voltage	–	–	0.125 × V_{DDIO_3}	V	I_{OL} = 2 mA, drive_sel<1:0> = 0b00
SID654B	V_{OL1}	Output LOW voltage	–	–	0.4	V	I_{OL} = 10 mA, drive_sel<1:0> = 0b00, V_{DDIO_3} = 2.7 V
SID655B	V_{OL2}	Output LOW voltage	–	–	0.4	V	I_{OL} = 2 mA, drive_sel<1:0> = 0b01, V_{DDIO_3} = 2.7 V
SID656B	V_{OL3}	Output LOW voltage	–	–	0.4	V	I_{OL} = 1 mA, drive_sel<1:0> = 0b10, V_{DDIO_3} = 2.7 V
SID656E	V_{OL4}	Output LOW voltage	–	–	0.4	V	I_{OL} = 0.5 mA, drive_sel<1:0> = 0b11, V_{DDIO_3} = 2.7 V
SID658B	$V_{OH_HB_HSSPI}$	Output HIGH voltage	V_{DDIO_3} – 0.2	–	–	V	I_{OH} = –0.1 mA drive_sel<1:0> = 0b00
SID659B	V_{OH_eMMC}	Output HIGH voltage	V_{DDIO_3} – (0.25 × V_{DDIO_3})	–	–	V	I_{OH} = –0.1 mA drive_sel<1:0> = 0b00
SID660B	V_{OH_SD}	Output HIGH voltage	V_{DDIO_3} – (0.25 × V_{DDIO_3})	–	–	V	I_{OH} = –2 mA drive_sel<1:0> = 0b00
SID661B	V_{OH1}	Output HIGH voltage	V_{DDIO_3} – 0.5	–	–	V	I_{OH} = –10 mA drive_sel<1:0> = 0b00, V_{DDIO_3} = 2.7 V
SID662B	V_{OH2}	Output HIGH voltage	V_{DDIO_3} – 0.5	–	–	V	I_{OH} = –2 mA drive_sel<1:0> = 0b01, V_{DDIO_3} = 2.7 V
SID663B	V_{OH3}	Output HIGH voltage	V_{DDIO_3} – 0.5	–	–	V	I_{OH} = –1 mA drive_sel<1:0> = 0b10, V_{DDIO_3} = 2.7 V
SID663E	V_{OH4}	Output HIGH voltage	V_{DDIO_3} – 0.5	–	–	V	I_{OH} = –0.5 mA drive_sel<1:0> = 0b11, V_{DDIO_3} = 2.7 V
SID664B	R_{PD}	Pull-down resistance	25	50	100	kΩ	–
SID665B	R_{PU}	Pull-up resistance	25	50	100	kΩ	–

Table 34 I/O specifications *(continued)*

Spec ID	Parameter	Description	Min	Typ	Max	Unit	Details/conditions
SID666B	V_{IH_CMOS}	Input HIGH voltage for HYPERBUS™ and HSSPI in CMOS mode	0.7 × V_{DDIO_3}	–	–	V	vtrip_sel<1:0> = 0b00
SID668E	V_{IH_TTL}	Input Voltage HIGH threshold for TTL mode	2	–	–	V	vtrip_sel<1:0> = 0b00
SID669B	$V_{IH_SD_eMMC}$	Input HIGH voltage for SD and eMMC in CMOS mode	0.625 × V_{DDIO_3}	–	–	V	vtrip_sel<1:0> = 0b00
SID669E	V_{IH_AUTO}	Input Voltage HIGH threshold in AUTO mode	0.8 × V_{DDIO_3}	–	–	V	vtrip_sel<1:0> = 0b00
SID670B	V_{IL_CMOS}	Input LOW voltage for HYPERBUS™ and HSSPI in CMOS mode	–	–	0.3 × V_{DDIO_3}	V	vtrip_sel<1:0> = 0b00
SID672E	V_{IL_TTL}	Input Voltage LOW threshold for TTL mode	–	–	0.8	V	vtrip_sel<1:0> = 0b00
SID673B	$V_{IL_SD_eMMC}$	Input LOW voltage for SD and eMMC in CMOS mode	–	–	0.25 × V_{DDIO_3}	V	vtrip_sel<1:0> = 0b00
SID673E	V_{IL_AUTO}	Input Voltage LOW threshold in AUTO mode	–	–	0.5 × V_{DDIO_3}	V	vtrip_sel<1:0> = 0b00
SID674B	V_{HYST_CMOS}	Hysteresis in CMOS mode	0.05 × V_{DDIO_3}	–	–	V	vtrip_sel<1:0> = 0b00
SID674F	V_{HYST_AUTO}	Hysteresis in AUTO mode	0.05 × V_{DDIO_3}	–	–	V	vtrip_sel<1:0> = 0b00
SID675B	C_{IN}	Input pin capacitance	–	–	5	pF	For 10 MHz and 100 MHz
SID676B	I_{IL}	Input leakage current	–450	1.02	450	nA	V_{DDIO_3} = 3.6 V, $V_{SSIO_3} < V_I < V_{DDIO_3}$ –40 °C ≤ T_A ≤ 125 °C TYP: T_A = 25 °C, V_{DDIO_3} = 3.3 V
SID679B	$f_{IN_HB_HSSPI}$	Input frequency	–	–	100	MHz	–
SID680B	f_{IN_eMMC}	Input frequency	–	–	52	MHz	–
SID681B	f_{IN_SD}	Input frequency	–	–	50	MHz	–
SID683B	$f_{OUT_HB_HSSPI}$	Output frequency	–	–	100	MHz	–
SID684B	f_{OUT_eMMC}	Output frequency	–	–	52	MHz	–
SID685B	f_{OUT_SD}	Output frequency	–	–	50	MHz	–
GPIO input specifications							
SID98	t_{FT}	Analog glitch filter (pulse suppression width)	–	–	50[62]	ns	One filter per port
SID99	t_{INT}	Minimum pulse width for GPIO interrupt	160	–	–	ns	–

26.7 Analog peripherals

26.7.1 SAR ADC

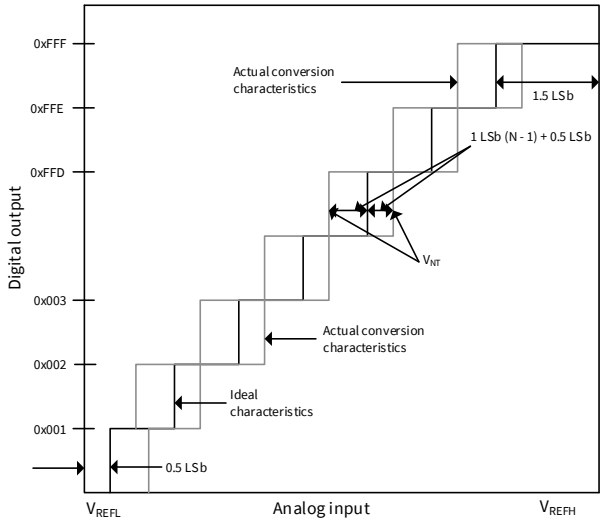

Total error of digital output N = (V_{NT} {1 LSb × (N – 1) + 0.5 LSb}) / 1 LSb [LSb]

1 LSb (Ideal value) = (V_{REFH} – V_{REFL}) / 4096 [V]

N: A/D converter digital output value
V_{ZT} (Ideal value): V_{REFL} + 0.5 LSb [V]
V_{FST} (Ideal value): V_{REFH} – 1.5 LSb [V]
V_{NT}: Voltage at which the digital output changes from N – 1 to N

Figure 18 ADC characteristics and error descriptions

Table 35 12-bit SAR ADC DC specifications

Spec ID	Parameter	Description	Min	Typ	Max	Unit	Details/conditions
SID100	A_RES	SAR ADC resolution	–	–	12	bits	–
SID101	A_V_{INS}	Input voltage range	V_{REFL}	–	V_{REFH}	V	–
SID102A	A_V_{DDA}[63]	V_{DDA} voltage range	2.7	–	5.5	V	–
SID102	A_V_{REFH}	V_{REFH} voltage range	2.7	–	V_{DDA}	V	ADC performance degrades when high reference is higher than supply (V_{DDA})
SID103	A_V_{REFL}	V_{REFL} voltage range	V_{SSA}	–	V_{SSA}	V	ADC performance degrades when low reference is lower than ground
SID103A	V_{band_gap}	Internal band gap reference voltage	0.882	0.9	0.918	V	–
SID19A	CLAMP_COU-PLING_RA-TIO_POS	Ratio of current collected on a pin to the positive current injected into a neighboring pin	–	–	0.1	%	–

Note
62.If a longer pulse suppression width is necessary, use Smart I/O.

Table 35 12-bit SAR ADC DC specifications

Spec ID	Parameter	Description	Min	Typ	Max	Unit	Details/conditions
SID19B	CLAMP_COUPLING_RATIO_NEG	Ratio of current collected on a pin to the negative current injected into a neighboring pin	–	–	1.2	%	–
SID19C	$R_{CLAMP_INTERNAL}$	Internal pin resistance to current collection point	–	–	50	Ω	–

26.7.2 Calculating the impact of neighboring pins

The three ADC specifications based on SID19A, SID19B, and SID19C, can be used to calculate the pin leakage and resulting ADC offset caused by injection current using the below formula:

$$I_{LEAK} = I_{INJECTED} \times CLAMP_COUPLING_RATIO$$
$$V_{ERROR} = I_{LEAK} \times (R_{CLAMP_INTERNAL} + R_{SOURCE})$$
$$Code\ Error = V_{ERROR} \times 2^{12} / V_{REF}$$

where:

$I_{INJECTED}$ is the injected current in mA.

I_{LEAK} is the calculated leakage current in mA.

V_{ERROR} is the voltage error calculated due to leakage currents in V.

V_{REF} is the ADC reference voltage in V.

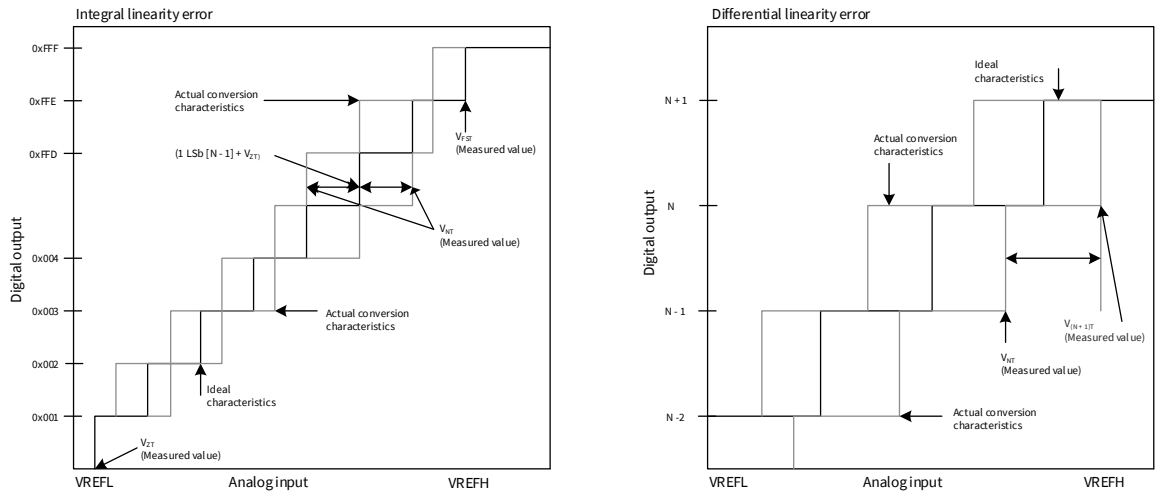

Integral linearity error of digital output $N = (V_{NT} - \{1\ LSb \times (N - 1) + V_{ZT}\}) / 1\ LSb$ [LSb]

Differential linearity error of digital output $N = (V_{(N+1)T} - V_{NT} - 1\ LSb) / 1\ LSb$ [LSb]

$1\ LSb = (V_{FST} - V_{ZT}) / 4094$ [V]

V_{ZT}: Voltage for which digital output changes from 0x000 to 0x001
V_{FST}: Voltage for which digital output changes from 0xFFE to 0xFFF.

Figure 19 Integral and differential linearity errors

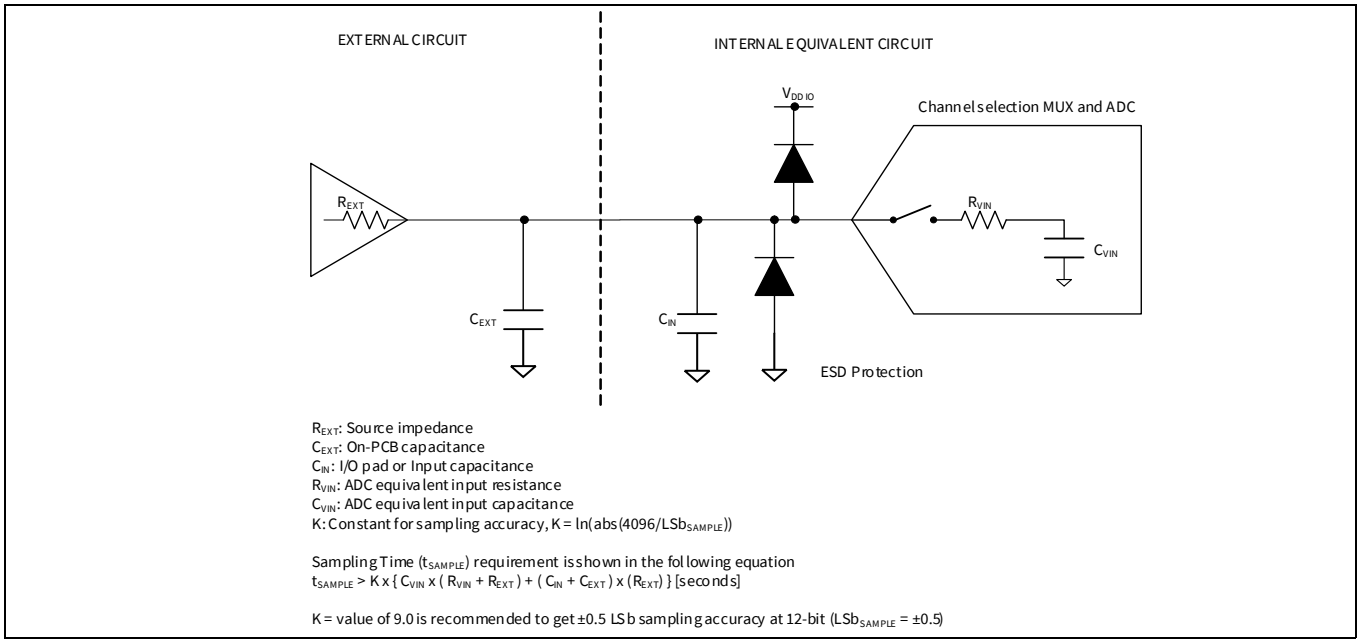

Figure 20 ADC equivalent circuit for analog input

Table 36 SAR ADC AC specifications

Spec ID	Parameter	Description	Min	Typ	Max	Unit	Details/conditions
SID104	V_{ZT}	Zero transition voltage	–20	–	20	mV	V_{DDA} = 2.7 V to 5.5 V, –40°C ≤ T_A ≤ 125°C before offset adjustment
SID105	V_{FST}	Full-scale transition voltage	–20	–	20	mV	V_{DDA} = 2.7 V to 5.5 V, –40°C ≤ T_A ≤ 125°C before offset adjustment
SID114	f_{ADC_4P5}	ADC operating frequency	2	–	26.67	MHz	4.5 V ≤ V_{DDA} ≤ 5.5 V
SID114A	f_{ADC_2P7}	ADC operating frequency	2	–	13.34	MHz	2.7 V ≤ V_{DDA} ≤ 4.5 V
SID113	t_{S_4P5}	Analog input sample time for channels of own SARMUX (4.5 V ≤ V_{DDA})	412	–	–	ns	4.5 V ≤ V_{DDA} ≤ 5.5 V, guaranteed by design
SID113A	t_{S_2P7}	Analog input sample timefor channels of own SARMUX (2.7 V ≤ V_{DDA})	600	–	–	ns	2.7 V ≤ V_{DDA} ≤ 4.5 V, guaranteed by design
SID113B	$t_{S_DR_4P5}$	Analog input sample time when input is from diagnostic reference (4.5 V ≤ V_{DDA})	2	–	–	µs	4.5 V ≤ V_{DDA} ≤ 5.5 V, guaranteed by design
SID113C	$t_{S_DR_2P7}$	Analog input sample time when input is from diagnostic reference (2.7 V ≤ V_{DDA})	2.5	–	–	µs	2.7 V ≤ V_{DDA} ≤ 4.5 V, guaranteed by design
SID113D	t_{S_TS}	Analog input sample time for temperature sensor	7	–	–	µs	2.7 V ≤ VDDA ≤ 5.5 V, Guaranteed by design

Note

63. V_{DDD} must be greater than 0.8 × V_{DDA} when ADC[2] is enabled. V_{DDIO_1} must be greater than 0.8 × V_{DDA} when ADC[0] is enabled.

Table 36 SAR ADC AC specifications *(continued)*

Spec ID	Parameter	Description	Min	Typ	Max	Unit	Details/conditions
SID113E	$t_{S_4P5_A}$	Analog input sample time for channels of another SARMUXn (n=1,2)	824	–	–	ns	4.5 V ≤ VDDA ≤ 5.5 V When ADC0 borrows the SARMUX of another ADC, guaranteed by design
SID113F	$t_{S_2P7_A}$	Analog input sample time for channels of another SARMUXn (n=1,2)	1648	–	–	ns	2.7 V ≤ VDDA < 4.5 V When ADC0 borrows the SARMUX of another ADC, guaranteed by design
SID106	t_{ST_4P5}	ADC max throughput (samples per second) when using the SARMUX of own ADC	–	–	1	Msps	4.5 V ≤ VDDA ≤ 5.5 V, 3.0 V ≤ VDDA ≤ 5.5 V for -40 °C ≤ TA ≤ 105°C, 80 MHz/3 = 26.67 MHz, 11 sampling cycles, 15 conversion cycles
SID106A	t_{ST_2P7}	ADC max throughput (samples per second) when using the SARMUX of own ADC	–	–	0.5	Msps	2.7 V ≤ V_{DDA} < 4.5 V 80 MHz / 6 = 13.3 MHz, 11 sampling cycles, 15 conversion cycles
SID106B	$t_{ST_4P5_A}$	ADC0 max throughput (samples per second) when borrowing the SARMUXn of another ADC (n=1,2)	–	–	0.5	Msps	4.5 V ≤ VDDA ≤ 5.5 V, 3.0 V ≤ VDDA ≤ 5.5 V for -40°C ≤ TA ≤ 105°C, 80 MHz/6 = 13.3 MHz, 11 sampling cycles, 15 conversion cycles
SID106C	$t_{ST_2P7_A}$	ADC0 max throughput (samples per second) when borrowing the SARMUXn of another ADC (n=1,2)	–	–	0.25	Msps	2.7V ≤ VDDA < 4.5 V, 80 MHz / 12 = 6.67 MHz, 11 sampling cycles, 15 conversion cycles
SID107	C_{VIN}	ADC input sampling capacitance	–	–	4.8	pF	Guaranteed by design
SID108	R_{VIN1}	Input path ON resistance (4.5 V to 5.5 V)	–	–	9.4	kΩ	Guaranteed by design
SID108A	R_{VIN2}	Input path ON resistance (2.7 V to 4.5 V)	–	–	13.9	kΩ	Guaranteed by design
SID108B	R_{DREF1}	Diagnostic path ON resistance (4.5 V to 5.5 V)	–	–	40	kΩ	Guaranteed by design
SID108C	R_{DREF2}	Diagnostic path ON resistance (2.7 V to 4.5 V)	–	–	50	kΩ	Guaranteed by design
SID119	ACC_RLAD	Diagnostic reference resistor ladder accuracy	–4	–	4	%	–
SID109	A_TE	Total error	–5	–	5	LSb	VDDA = VREFH = 2.7 V to 5.5 V, VREFL = VSSA –40 °C ≤ T_A ≤ 125°C Total Error after offset and gain adjustment at 12-bit resolution mode
SID109A	A_TEB	Total error	–12	–	12	LSb	VDDA = VREFH = 2.7 V to 5.5 V, VREFL = VSSA –40 °C ≤ T_A ≤ 125°C Total error before offset and gain adjustment at 12 bit resolution mode
SID110	A_INL	Integral nonlinearity	–2.5	–	2.5	LSb	V_{DDA} = 2.7 V to 5.5 V, –40 °C ≤ T_A ≤ 125°C

Table 36 SAR ADC AC specifications *(continued)*

Spec ID	Parameter	Description	Min	Typ	Max	Unit	Details/conditions
SID111	A_DNL	Differential nonlinearity	–0.99	–	1.9	LSb	V_{DDA} = 2.7 V to 5.5 V, –40 °C ≤ T_A ≤ 125°C
SID112	A_CE	Channel to channel variation (for channels connected to same ADC)	–1	–	1	LSb	V_{DDA} = 2.7 V to 5.5 V, –40 °C ≤ T_A ≤ 125°C
SID115	I_{AIC}	Analog input leakage current	–350	70	350	nA	When input pad is selected for conversion
SID116	$I_{DIAGREF}$	Diagnostic reference current	–	–	70	µA	–
SID117	I_{VDDA}	Analog power supply current while ADC is operating	–	360	550	µA	Per enabled ADC
SID117A	I_{VDDA_DS}	Analog power supply current while ADC is not operating	–	1	21	µA	Per enabled ADC
SID118	I_{VREF}	Analog reference voltage current while ADC is operating	–	360	550	µA	Per enabled ADC
SID118A	I_{VREF_LEAK}	Analog reference voltage current while ADC is not operating	–	1.8	5	µA	Per enabled ADC

Table 37 Temperature sensor specifications

Spec ID	Parameter	Description	Min	Typ	Max	Units	Details/Conditions
SID201	TSENSACC2	Temperature sensor accuracy 2	–5	–	5	°C	–40°C ≤ T_J ≤ 150°C This spec is valid when using ADC[0] (V_{DDIO_1}), ADC[1] (V_{DDIO_2}) or ADC[2] (V_{DDD}) with the following conditions: a. 3.0 V ≤ V_{DDD}, V_{DDIO_1} or V_{DDIO_2} = V_{DDA} = V_{REFH} ≤ 3.6 V or b. 4.5 V ≤ V_{DDD}, V_{DDIO_1} or V_{DDIO_2} = V_{DDA} = V_{REFH} ≤ 5.5 V
SID201A	TSENSACC3	Temperature sensor accuracy 3	–10	–	10	°C	–40 °C ≤ T_J ≤ 150°C This spec is valid when using ADC[0] (V_{DDIO_1}) or ADC[2] (V_{DDD}) with the following condition: 2.7 V ≤ V_{DDD} or V_{DDIO_1} ≤ 5.5 V and 2.7 V ≤ V_{DDA} = V_{REFH} ≤ 5.5 V and 0.8 × V_{DDA} < V_{DDD} or V_{DDIO_1}

26.7.3 Voltage divider accuracy

Table 38 Voltage divider accuracy

Spec ID	Parameter	Description	Min	Typ	Max	Units	Details/conditions
SID202	V_{MONDIV}	Uncorrected monitor voltage divider accuracy (measured by ADC), compared to ideal supply/2	–20	2	20	%	Any HV supply pad within 2.7 V–5.5 V operating range

26.8 AC specifications

Unless otherwise noted, the timings are defined with the guidelines mentioned in the **Figure 21**.

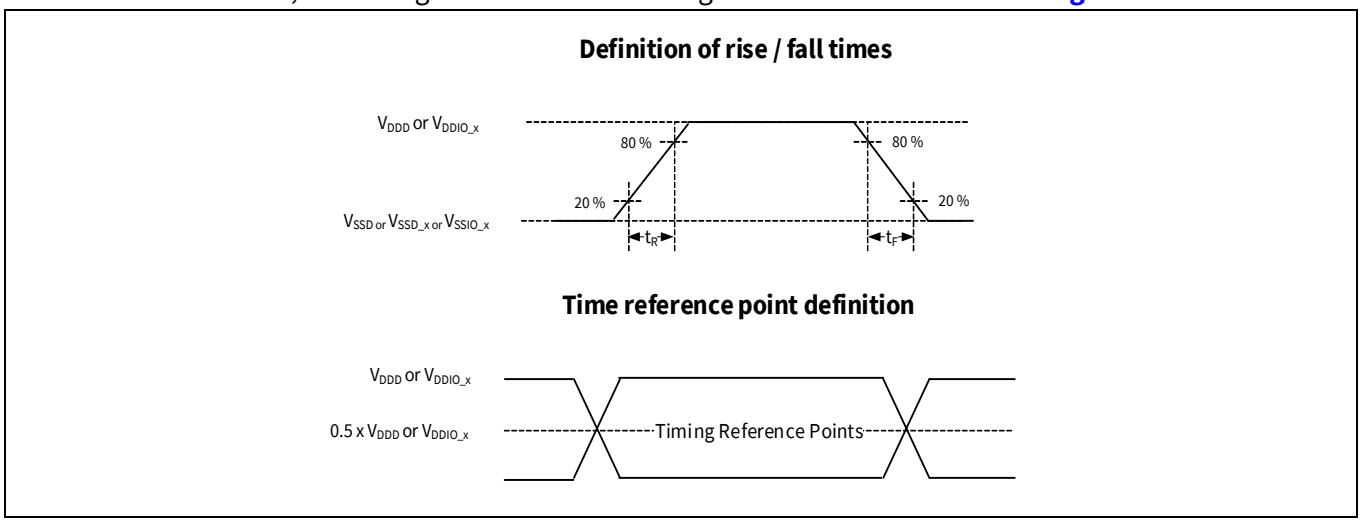

Figure 21 AC timings specifications

26.9 Digital peripherals

Table 39 Timer/counter/PWM (TCPWM) specifications

Spec ID	Parameter	Description	Min	Typ	Max	Unit	Details/conditions
SID120	f_C	TCPWM operating frequency	–	–	100	MHz	f_C = peripheral clock
SID121	$t_{PWMENEXT}$	Input trigger pulse width for all trigger events	2 / f_C	–	–	ns	Trigger Events can be Stop, Start, Reload, Count, Capture, or Kill depending on which mode of operation is selected.
SID122	t_{PWMEXT}	Output trigger pulse widths	2 / f_C	–	–	ns	Minimum possible width of Overflow, Underflow, and Counter = Compare (CC) value trigger outputs
SID123	t_{CRES}	Resolution of counter	1 / f_C	–	–	ns	Minimum time between successive counts
SID124	t_{PWMRES}	PWM resolution	1 / f_C	–	–	ns	Minimum pulse width of PWM output
SID125	t_{QRES}	Quadrature inputs resolution	2 / f_C	–	–	ns	Minimum pulse width between Quadrature phase inputs.

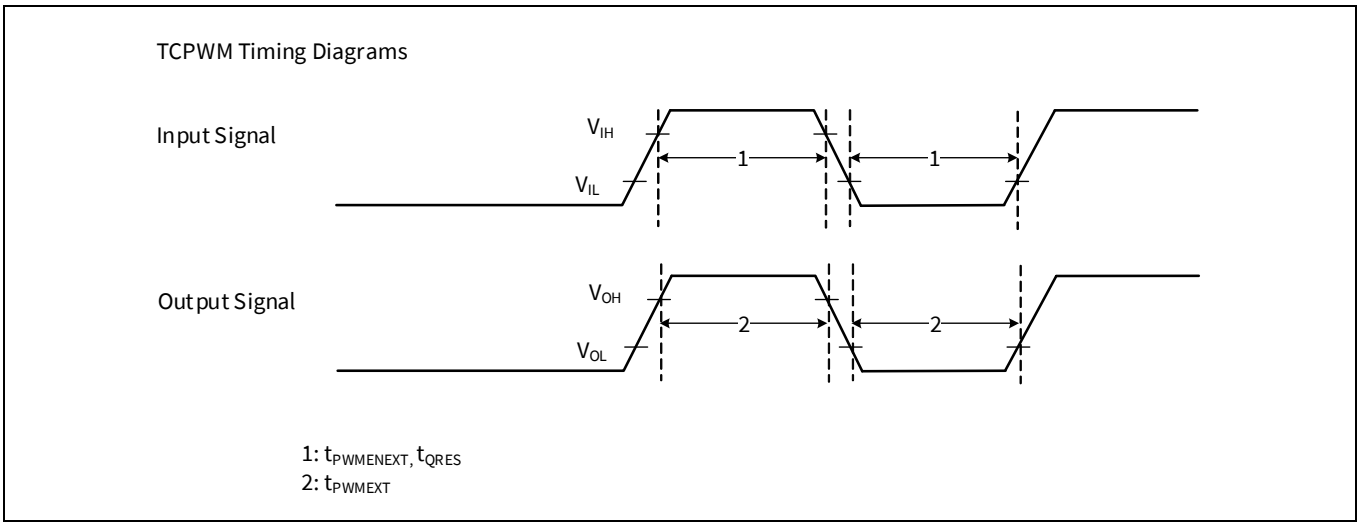

Figure 22 TCPWM timing diagrams

Table 40 Serial communication block (SCB) specifications

Spec ID	Parameter	Description	Min	Typ	Max	Unit	Details/conditions
SID129	f_{SCB}	SCB operating frequency	–	–	100	MHz	–
I²C Interface-Standard mode							
SID130	f_{SCL}	SCL clock frequency	–	–	100	kHz	–
SID131	$t_{HD;STA}$	Hold time, START condition	4000	–	–	ns	–
SID132	t_{LOW}	Low period of SCL	4700	–	–	ns	–
SID133	t_{HIGH}	High period of SCL	4000	–	–	ns	–
SID134	$t_{SU;STA}$	Setup time for a repeated START	4700	–	–	ns	–
SID135	$t_{HD;DAT}$	Data hold time, for receiver	0	–	–	ns	–
SID136	$t_{SU;DAT}$	Data setup time	250	–	–	ns	–
SID138	t_F	Fall time of SCL and SDA	–	–	300	ns	Input and output
SID139	$t_{SU;STO}$	Setup time for STOP	4000	–	–	ns	–
SID140	t_{BUF}	Bus-free time between START and STOP	4700	–	–	ns	–
SID141	C_B	Capacitive load for each bus line	–	–	400	pF	–
SID142	$t_{VD;DAT}$	Time for data signal from SCL LOW to SDA output	–	–	3450	ns	–
SID143	$t_{VD;ACK}$	Data valid acknowledge time	–	–	3450	ns	–
SID144	V_{OL}	LOW level output voltage	0	–	0.4	V	Open drain at 3-mA sink current
SID145	I_{OL}	LOW level output current	3	–	–	mA	V_{OL} = 0.4 V
I²C Interface-Fast mode							
SID150	f_{SCL_F}	SCL clock frequency	–	–	400	kHz	–
SID151	$t_{HD;STA_F}$	Hold time, START condition	600	–	–	ns	–
SID152	t_{LOW_F}	Low period of SCL	1300	–	–	ns	–
SID153	t_{HIGH_F}	High period of SCL	600	–	–	ns	–
SID154	$t_{SU;STA_F}$	Setup time for a repeated START	600	–	–	ns	–
SID155	$t_{HD;DAT_F}$	Data hold time, for receiver	0	–	–	ns	–
SID156	$t_{SU;DAT_F}$	Data setup time	100	–	–	ns	–
SID158	t_{F_F}	Fall time of SCL and SDA	20 × (V_{DDD} / 5.5)	–	300	ns	Input and output, GPIO_ENH: slow mode, 400 pF load
SID158A	t_{FA_F}	Fall time of SCL and SDA	0.35	–	300	ns	Input and output GPIO_STD: drive_sel<1:0>= 0b00 MIN: 10 pF load, RPU = 35.41 kΩ MAX: 400 pF load, RPU = 350 Ω
SID159	$t_{SU;STO_F}$	Setup time for STOP	600	–	–	ns	Input and output
SID160	t_{BUF_F}	Bus free time between START and STOP	1300	–	–	ns	–
SID161	C_{B_F}	Capacitive load for each bus line	–	–	400	pF	–
SID162	$t_{VD;DAT_F}$	Time for data signal from SCL LOW to SDA output	–	–	900	ns	–
SID163	$t_{VD;ACK_F}$	Data valid acknowledge time	–	–	900	ns	–

Notes

64. In order to drive full bus load at 400 kHz, 6 mA I_{OL} is required at 0.6 V V_{OL}.
65. In order to drive full bus load at 1 MHz, 20 mA I_{OL} is required at 0.4 V V_{OL}. However, this device does not support it.

Table 40 Serial communication block (SCB) specifications *(continued)*

Spec ID	Parameter	Description	Min	Typ	Max	Unit	Details/conditions
SID164	t_{SP_F}	Pulse width of spikes that must be suppressed by the input filter	–	–	50	ns	–
SID165	V_{OL_F}	LOW level output voltage	0	–	0.4	V	Open-drain at 3 mA sink current
SID165	I_{OL_F}	LOW level output current	3	–	–	mA	V_{OL} = 0.4 V
SID167	I_{OL2_F}	LOW level output current	6	–	–	mA	V_{OL} = 0.6 V[64]
I^2C Interface-Fast-Plus mode							
SID170	f_{SCL_FP}	SCL clock frequency	–	–	1	MHz	–
SID171	$t_{HD;STA_FP}$	Hold time, START condition	260	–	–	ns	–
SID172	t_{LOW_FP}	Low period of SCL	500	–	–	ns	–
SID173	t_{HIGH_FP}	High period of SCL	260	–	–	ns	–
SID174	$t_{SU;STA_FP}$	Setup time for a repeated START	260	–	–	ns	–
SID175	$t_{HD;DAT_FP}$	Data hold time, for receiver	0	–	–	ns	–
SID176	$t_{SU;DAT_FP}$	Data setup time	50	–	–	ns	–
SID178	t_{F_FP}	Fall time of SCL and SDA	20 × (V_{DDD} / 5.5)	–	160	ns	Input and output 20-pF load GPIO_ENH: slow mode
SID179	$t_{SU;STO_FP}$	Setup time for STOP	260	–	–	ns	Input and output
SID180	t_{BUF_FP}	Bus free time between START and STOP	500	–	–	ns	
SID181	C_{B_FP}	Capacitive load for each bus line	–	–	20	pF	
SID182	$t_{VD;DAT_FP}$	Time for data signal from SCL LOW to SDA output	–	–	450	ns	–
SID183	$t_{VD;ACK_FP}$	Data valid acknowledge time	–	–	450	ns	–
SID184	t_{SP_FP}	Pulse width of spikes that must be suppressed by the input filter	–	–	50	ns	–
SID186	V_{OL_FP}	LOW level output voltage	0	–	0.4	V	Open-drain at 3 mA sink current
SID187	I_{OL_FP}	LOW level output current	3[65]	–	–	mA	V_{OL} = 0.4 V[65]
SPI Interface Master (Full-clock mode: LATE_MISO_SAMPLE = 1) [Conditions: drive_sel<1:0>= 0x]							
SID190	f_{SPI}	SPI operating frequency	–	–	12.5	MHz	Do not use half-clock mode: LATE_MISO_SAMPLE = 0
SID191	t_{DMO}	SPI Master: MOSI valid after SCLK driving edge	–	–	15	ns	–
SID192	t_{DSI}	SPI Master: MISO valid before SCLK capturing edge	40	–	–	ns	–
SID193	t_{HMO}	SPI Master: Previous MOSI data hold time	0	–	–	ns	–
SID194	$t_{W_SCLK_H_L}$	SPI SCLK pulse width HIGH or LOW	0.4 × (1 / f_{SPI})	0.5 × (1 / f_{SPI})	0.6 × (1 / f_{SPI})	ns	–
SID196	t_{DHI}	SPI Master: MISO hold time after SCLK capturing edge	0	–	–	ns	–

Notes
64. In order to drive full bus load at 400 kHz, 6 mA I_{OL} is required at 0.6 V V_{OL}.
65. In order to drive full bus load at 1 MHz, 20 mA I_{OL} is required at 0.4 V V_{OL}. However, this device does not support it.

Table 40 Serial communication block (SCB) specifications *(continued)*

Spec ID	Parameter	Description	Min	Typ	Max	Unit	Details/conditions
SID198	t_{EN_SETUP}	SSEL valid, before the first SCK capturing edge	0.5 × (1/f_{SPI})	–	–	ns	Min is half clock period
SID199	t_{EN_SHOLD}	SSEL hold, after the last SCK capturing edge	0.5 × (1/f_{SPI})	–	–	ns	Min is half clock period
SID195	C_{SPIM_MS}	SPI capacitive load	–	–	10	pF	–
SPI Interface Slave (internally clocked) [Conditions: drive_sel<1:0>= 0x]							
SID205	f_{SPI_INT}	SPI operating frequency	–	–	10	MHz	–
SID206	t_{DMI_INT}	SPI Slave: MOSI Valid before Sclock capturing edge	5	–	–	ns	–
SID207	t_{DSO_INT}	SPI Slave: MISO Valid after Sclock driving edge, in the internal-clocked mode	–	–	62	ns	–
SID208	t_{HSP}	SPI Slave: Previous MISO data hold time	3	–	–	ns	–
SID209	$t_{EN_SETUP_INT}$	SPI Slave: SSEL valid to first SCK valid edge	33	–	–	ns	–
SID210	$t_{EN_HOLD_INT}$	SPI Slave Select active (LOW) from last SCLK hold	33	–	–	ns	–
SID211	$t_{EN_SETUP_PRE}$	SPI Slave: from SSEL valid, to SCK falling edge before the first data bit	20	–	–	ns	–
SID212	$t_{EN_HOLD_PRE}$	SPI Slave: from SCK falling edge before the first data bit, to SSEL invalid	20	–	–	ns	–
SID213	$t_{EN_SETUP_CO}$	SPI Slave: from SSEL valid, to SCK falling edge in the first data bit	20	–	–	ns	–
SID214	$t_{EN_HOLD_CO}$	SPI Slave: from SCK falling edge in the first data bit, to SSEL invalid	20	–	–	ns	–
SID215	$t_{W_DIS_INT}$	SPI Slave Select inactive time	40	–	–	ns	–
SID216	$t_{W_SCLKH_INT}$	SPI SCLK pulse width HIGH	20	–	–	ns	–
SID217	$t_{W_SCLKL_INT}$	SPI SCLK pulse width LOW	20	–	–	ns	–
SID218	t_{SIH_INT}	SPI MOSI hold from SCLK	12	–	–	ns	–
SID219	C_{SPIS_INT}	SPI Capacitive Load	–	–	10	pF	–
SPI Interface Slave (externally clocked) [Conditions: drive_sel<1:0>= 0x]							
SID220	f_{SPI_EXT}	SPI operating frequency	–	–	12.5	MHz	–
SID221	t_{DMI_EXT}	SPI Slave: MOSI Valid before Sclock capturing edge	5	–	–	ns	–
SID222	t_{DSO_EXT}	SPI Slave: MISO Valid after Sclock driving edge, in the external-clocked mode	–	–	32	ns	–
SID223	t_{HSO_EXT}	SPI Slave: Previous MISO data hold time	3	–	–	ns	–
SID224	$t_{EN_SETUP_EXT}$	SPI Slave: SSEL valid to first SCK valid edge	40	–	–	ns	–
SID225	$t_{EN_HOLD_EXT}$	SPI Slave Select active (LOW) from last SCLK hold	40	–	–	ns	–
SID226	$t_{W_DIS_EXT}$	SPI Slave Select inactive time	80	–	–	ns	–
SID227	$t_{W_SCLKH_EXT}$	SPI SCLK pulse width HIGH	34	–	–	ns	–

Notes

64. In order to drive full bus load at 400 kHz, 6 mA I_{OL} is required at 0.6 V V_{OL}.
65. In order to drive full bus load at 1 MHz, 20 mA I_{OL} is required at 0.4 V V_{OL}. However, this device does not support it.

Table 40 Serial communication block (SCB) specifications *(continued)*

Spec ID	Parameter	Description	Min	Typ	Max	Unit	Details/conditions
SID228	$t_{W_SCLKL_EXT}$	SPI SCLK pulse width LOW	34	–	–	ns	–
SID229	t_{SIH_EXT}	SPI MOSI hold from SCLK	20	–	–	ns	–
SID230	C_{SPIS_EXT}	SPI Capacitive Load	–	–	10	pF	–
SID231	t_{VSS_EXT}	SPI Slave: MISO valid after SSEL falling edge (CPHA = 0)	–	–	33	ns	–
UART interface							
SID240	f_{BPS}	Data rate	–	–	10	Mbps	–

Notes
64.In order to drive full bus load at 400 kHz, 6 mA I_{OL} is required at 0.6 V V_{OL}.
65.In order to drive full bus load at 1 MHz, 20 mA I_{OL} is required at 0.4 V V_{OL}. However, this device does not support it.

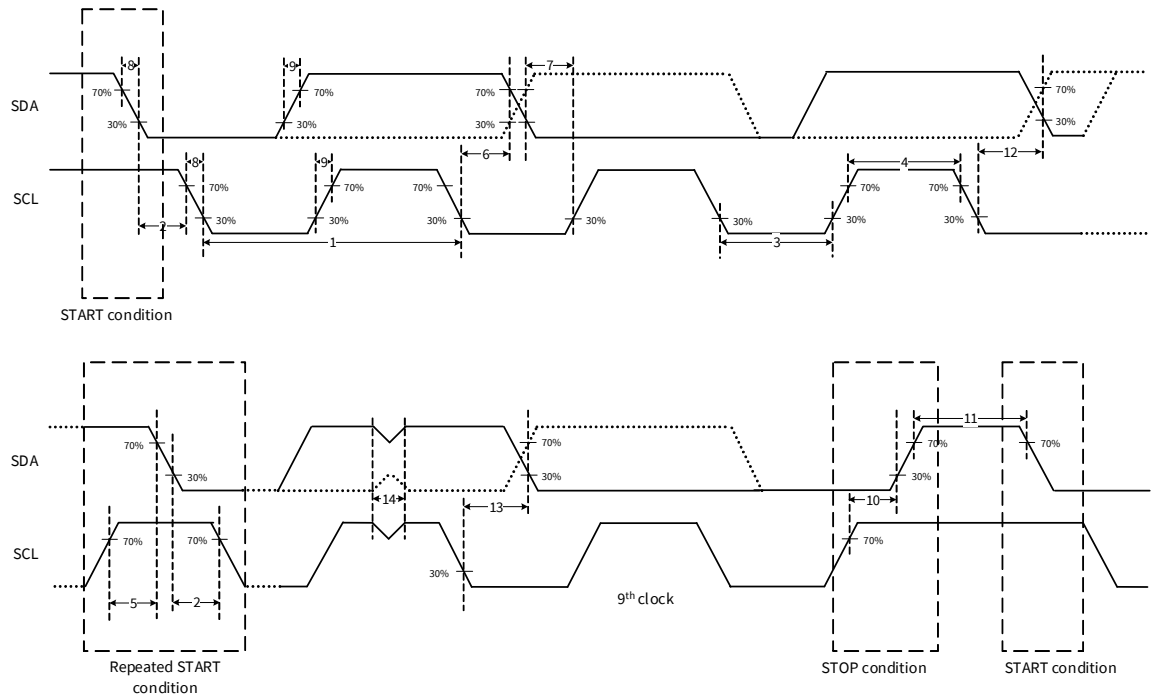

1: SCL clock period = $1/f_{SCL}$
2: Hold time, START condition = $t_{HD;STA}$
3: LOW period of SCL = t_{LOW}
4: HIGH period of SCL = t_{HIGH}
5: Setup time for a repeated START = $t_{SU;STA}$
6: Data hold time, for receiver = $t_{HD;DAT}$
7: Data setup time = $t_{SU;DAT}$
8: Fall time of SCL and SDA = t_F
9: Rise time of SCL and SDA = t_R
10: Setup time for STOP = $t_{SU;STO}$
11: Bus-free time between START and STOP = t_{BUF}
12: Time for data signal from SCL LOW to SDA output = $t_{VD;DAT}$
13: Data valid acknowledge time = $t_{VD;ACK}$
14: Pulse width of spikes that must be suppressed by the input filter = t_{SP}

Figure 23 I^2C timing diagrams

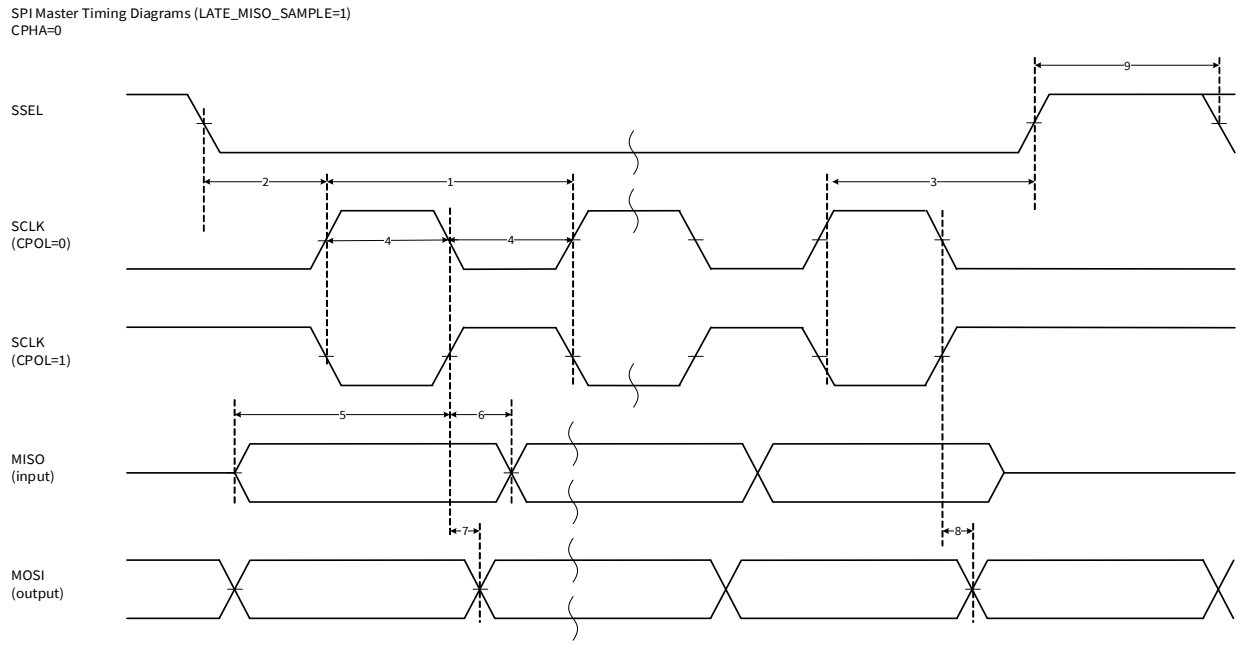

1: SCLK period = 1 / f_{SPI}
2: Enable lead time (setup) = t_{EN_SETUP} = Depends on SPI_CTRL.SSEL_SETUP_DEL (Refer to the Register TRM)
3: Enable trail time (hold) = t_{EN_HOLD} = Depends on SPI_CTRL.SSEL_HOLD_DEL (Refer to the Register TRM)
4: SCLK high or low time = $t_{W_SCLK_H_L}$
5: Input data setup time = t_{DSI}
6: Input data hold time = t_{DHI}
7: Output data valid after SCLK driving edge = t_{DMO}
8: Output data hold time = t_{HMO}
9: SSEL high pulse width = Depends on SPI_CTRL.SSEL_INTER_FRAME_DEL (Refer to the Register TRM)

Figure 24 SPI master timing diagrams with LOW clock phase

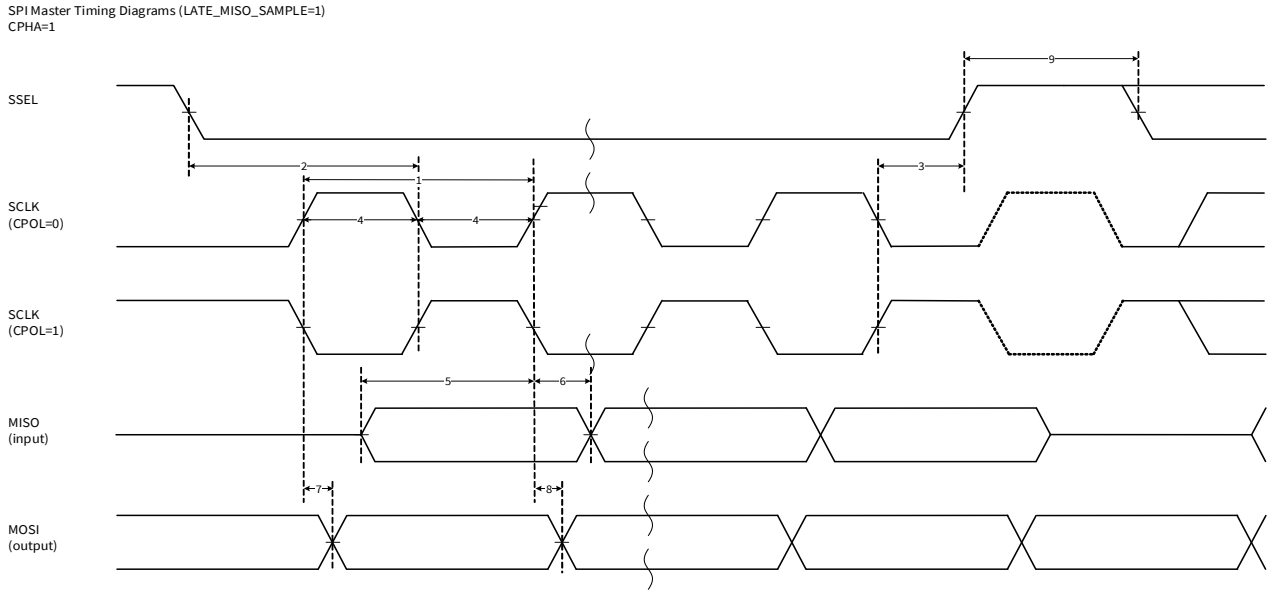

1: SCLK period = 1 / f_{SPI}
2: Enable lead time (setup) = t_{EN_SETUP} = Depends on SPI_CTRL.SSEL_SETUP_DEL (Refer to the Register TRM)
3: Enable trail time (hold) = t_{EN_HOLD} = Depends on SPI_CTRL.SSEL_HOLD_DEL (Refer to the Register TRM)
4: SCLK high or low time = $t_{W_SCLK_H_L}$
5: Input data setup time = t_{DSI}
6: Input data hold time = t_{HDI}
7: Output data valid after SCLK driving edge = t_{DMO}
8: Output data hold time = t_{HMO}
9: SSEL high pulse width = Depends on SPI_CTRL.SSEL_INTER_FRAME_DEL (Refer to the Register TRM)

Figure 25 SPI master timing diagrams with HIGH clock phase

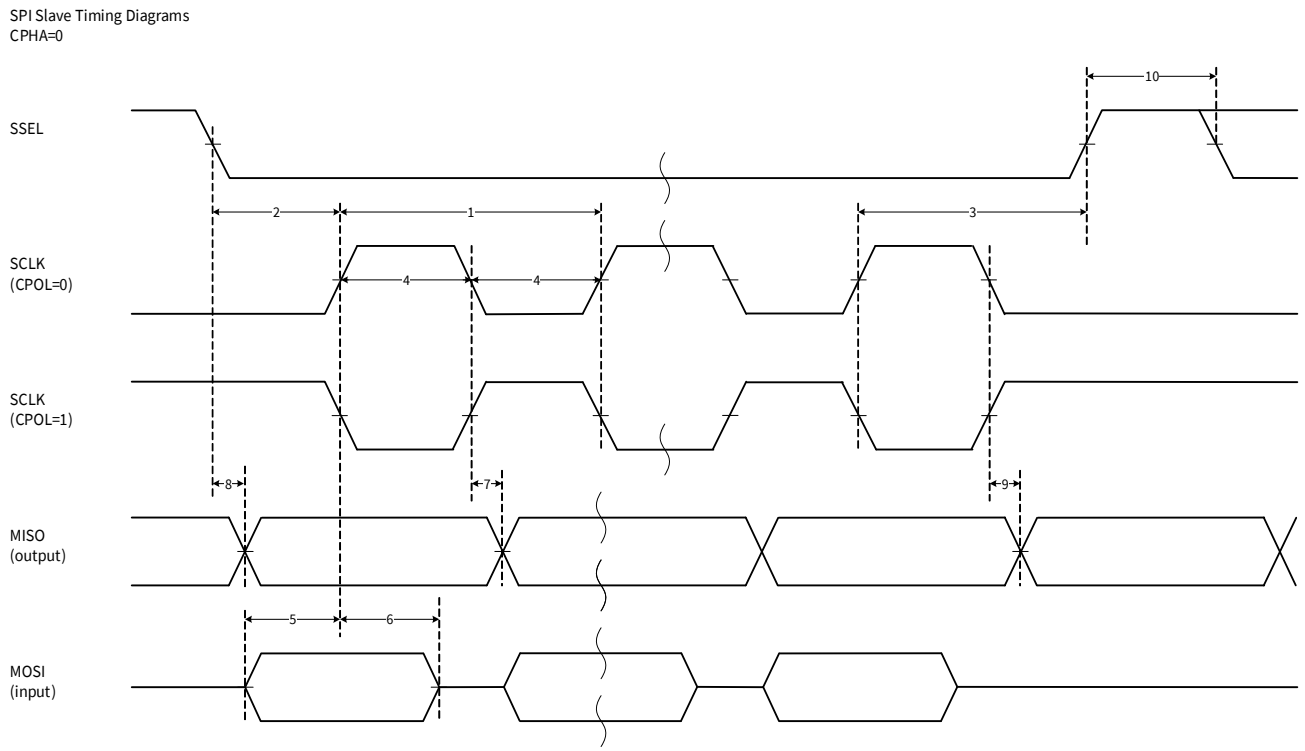

1: SCLK period = 1 / f_{SPI_EXT}
2: enable lead time (setup) = $t_{EN_SETUP_EXT}$
3: enable trail time (hold) = $t_{EN_HOLD_EXT}$
4: SCLK high or low time = $t_{w_SCLKH_EXT}$ = $t_{w_SCLKL_EXT}$
5: input data setup time = t_{DMI_EXT}
6: input data hold time = t_{SIH_EXT}
7: output data valid after SCLK driving edge = t_{DSO_EXT}
8: output data valid after SSEL falling edge (CPHA=0) = t_{VSS_EXT}
9: output data hold time = t_{HSO}
10: SSEL high pulse width = t_{DIS_EXT}

Figure 26 SPI slave timing diagrams with LOW clock phase

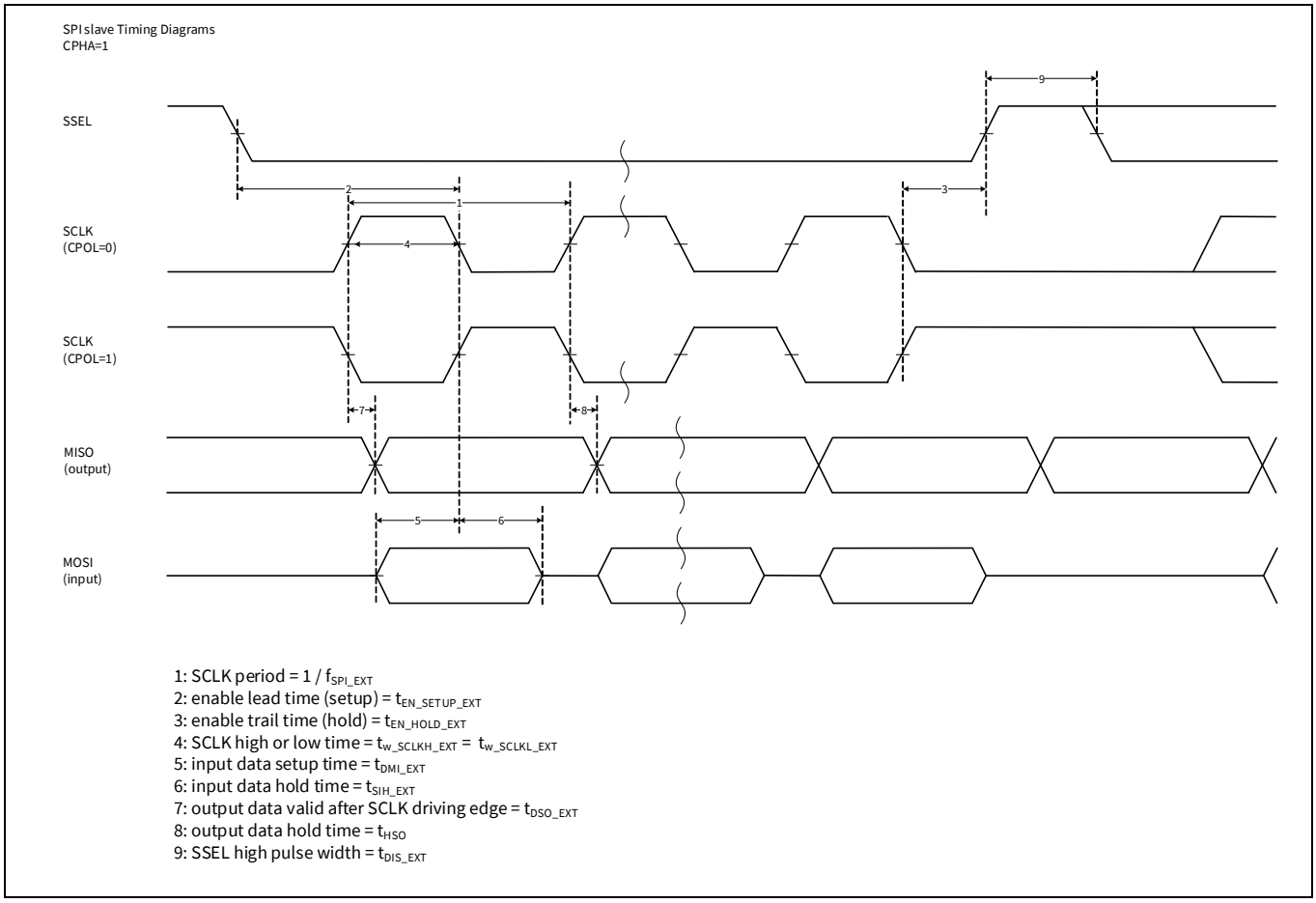

Figure 27 SPI slave timing diagrams with HIGH clock phase

Table 41 CAN FD specifications

Spec ID	Parameter	Description	Min	Typ	Max	Unit	Details/conditions
SID630	f_{HCLK}	System clock frequency	–	–	100	MHz	$f_{CCLK} \leq f_{HCLK}$, guaranteed by design
SID631	f_{CCLK}	CAN clock frequency	–	–	100	MHz	$f_{CCLK} \leq f_{HCLK}$, guaranteed by design

26.10 Memory

Table 42 Flash DC specifications

Spec ID	Parameter	Description	Min	Typ	Max	Unit	Details/conditions
SID260	V_{PE}	Erase and program voltage	2.7	–	5.5	V	

Table 43 Flash AC specifications

Spec ID	Parameter	Description	Min	Typ	Max	Unit	Details/conditions
SID257	f_{FO}	Maximum flash memory operation frequency	–	–	100	MHz	Zero wait access to code-flash memory up to 100 MHz Zero wait access with cache hit up to 250 MHz
SID254	t_{ERS_SUS}	Maximum time from erase suspend command till erase is indeed suspend	–	–	37.5	µs	–
SID255	$t_{ERS_RES_SUS}$	Minimum time allowed from erase resume to erase suspend	250	–	–	µs	Guaranteed by design
SID258	t_{BC_WF}	Blank check time for N-bytes of work-flash	–	–	10 + 0.3 × N	µs	At 100 MHz, N ≥ 4 and multiple of 4, excludes system overhead time
SID259	$t_{SECTORERASE1}$	Sector erase time (code-flash: 32 KB)	–	45	90	ms	Includes internal pre-programming time
SID259A	$t_{SECTORERASE2}$	Sector erase time (code-flash: 8 KB)	–	15	30	ms	Includes internal pre-programming time
SID261	$t_{SECTORERASE3}$	Sector erase time (work-flash, 2 KB)	–	80	160	ms	Includes internal pre-programming time
SID262	$t_{SECTORERASE4}$	Sector erase time (work-flash, 128 B)	–	5	15	ms	Includes internal pre-programming time
SID263	t_{WRITE1}	64-bit write time (code-flash)	–	30	60	µs	Excludes system overhead time
SID264	t_{WRITE2}	256-bit write time (code-flash)	–	40	70	µs	Excludes system overhead time
SID265	t_{WRITE3}	4096-bit write time (code-flash)[66]	–	320	1200	µs	Excludes system overhead time
SID266	t_{WRITE4}	32-bit write time (work-flash)	–	30	60	µs	Excludes system overhead time
SID267	t_{FRET1}	Code-flash retention. 1000 program/erase cycles	20	–	–	years	T_A (power on and off) ≤ 85°C average
SID268	t_{FRET3}	Work-flash retention. 125,000 program/erase cycles	20	–	–	years	T_A (power on and off) ≤ 85°C average
SID269	t_{FRET4}	Work-flash retention. 250,000 program/erase cycles	10	–	–	years	T_A (power on and off) ≤ 85°C average
SID612	I_{CC_ACT2}	Program operating V_{CCD} current (code or work-flash)	–	7	58	mA	TYP: T_A = 25°C, V_{DDD} = 5.0 V, V_{CCD} = 1.15 V, process typ (TT) MAX: T_A = 125°C, V_{DDD} = 5.5 V, V_{CCD} = 1.2 V, process worst (FF) Guaranteed by design
SID613	I_{CC_ACT3}	Erase operating V_{CCD} current (code- or work-flash)	–	7	52	mA	TYP: T_A = 25°C, V_{DDD} = 5.0 V, V_{CCD} = 1.15 V, process typ (TT) MAX: T_A = 125°C, V_{DDD} = 5.5 V, V_{CCD} = 1.2 V, process worst (FF) Guaranteed by design

Note

66. The code-flash includes a 'Write Buffer' of 4096-bit. If the application software writes this buffer multiple times, to get the overall write time multiply one sector write time with the corresponding factor (say for factor

Table 43 Flash AC specifications *(continued)*

Spec ID	Parameter	Description	Min	Typ	Max	Unit	Details/conditions
SID612A	I_{CC_ACT2A}	Program operating V_{DDD} current (code or work-flash)	–	8	10	mA	TYP: T_A = 25°C, V_{DDD} = 5.0 V, V_{CCD} = 1.15 V, process typ (TT) MAX: T_A = 125°C, V_{DDD} = 5.5 V, V_{CCD} = 1.2 V, process worst (FF) Guaranteed by design
SID613A	I_{CC_ACT3A}	Erase operating V_{DDD} current (code- or work-flash)	–	8	16	mA	TYP: T_A = 25°C, V_{DDD} = 5.0 V, V_{CCD} = 1.15 V, process typ (TT) MAX: T_A = 125°C, V_{DDD} = 5.5 V, V_{CCD} = 1.2 V, process worst (FF) Guaranteed by design

26.11 System resources

Table 44 System resources

Spec ID	Parameter	Description	Min	Typ	Max	Unit	Details/conditions
Power-on reset (POR) specifications							
SID270	V_{POR_D}	V_{DDD} rising voltage to de-assert POR	1.5	–	2.35	V	Guaranteed by design
SID276	V_{POR_A}	V_{DDD} falling voltage to assert POR	1.45	–	2.1	V	–
SID271	V_{POR_H}	Level detection hysteresis	20	–	300	mV	–
SID272	t_{DLY_POR}	Delay between V_{DDD} rising through 2.3 V and internal deassertion of POR	–	–	3	µs	Guaranteed by design
SID273	t_{POFF}	V_{DDD} Power off time	100	–	–	µs	V_{DDD} < 1.45 V
SID274	POR_RR1	V_{DDD} power ramp rate with robust BOD (BOD operation is guaranteed)	–	–	100	mV/µs	This ramp supports robust BOD
SID275	POR_RR2	V_{DDD} power ramp rate without robust BOD	–	–	1000	mV/µs	This ramp does not support robust BOD t_{POFF} must be satisfied.
High-voltage BOD (HV BOD) specifications							
SID500	$V_{TR_2P7_R}$	HV BOD 2.7 V rising detection point for V_{DDD} and V_{DDA} (default)	2.474	2.55	2.627	V	–
SID501	$V_{TR_2P7_F}$	HV BOD 2.7 V falling detection point for V_{DDD} and V_{DDA} (default)	2.449	2.525	2.601	V	–
SID502	$V_{TR_3P0_R}$	HV BOD 3.0 V rising detection point for V_{DDD} and V_{DDA}	2.765	2.85	2.936	V	–
SID503	$V_{TR_3P0_F}$	HV BOD 3.0 V falling detection point for V_{DDD} and V_{DDA}	2.74	2.825	2.91	V	–
SID505	HVBOD_RR_A	Power ramp rate: V_{DDD} and V_{DDA} (Active)	–	–	100	mV/µs	–
SID506	HVBOD_RR_DS	Power ramp rate: V_{DDD} and V_{DDA} (Deep Sleep)	–	–	10	mV/µs	–
SID507	$t_{DLY_ACT_HVBOD}$	Active mode delay between V_{DDD} falling/rising through $V_{TR_2P7_F/R}$ or $V_{TR_3P0_F/R}$ and an internal HV BOD signal transitioning	–	–	0.5	µs	Guaranteed by design
SID507A	$t_{DLY_ACT_HVBOD}$	Active mode delay between V_{DDA} falling/rising through $V_{TR_2P7_F/R}$ or $V_{TR_3P0_F/R}$ and internal HV BOD signal transitioning	–	–	1	µs	Guaranteed by design
SID507B	$t_{DLY_DS_HVBOD}$	Deep Sleep mode delay between V_{DDD}/V_{DDA} falling/rising through $V_{TR_2P7_F/R}$ or $V_{TR_3P0_F/R}$ and an internal HV BOD signal transitioning	–	–	4	µs	Guaranteed by design
SID508	t_{RES_HVBOD}	Response time of HV BOD, V_{DDD}/V_{DDA} supply. (For falling-then-rising supply at max ramp rate; threshold is $V_{TR_2P7_F}$ or $V_{TR_3P0_F}$)	100	–	–	ns	Guaranteed by design

Table 44 System resources *(continued)*

Spec ID	Parameter	Description	Min	Typ	Max	Unit	Details/conditions
Low-voltage BOD (LV BOD) specifications							
SID510	$V_{TR_R_LVBOD}$	LV BOD rising detection point for V_{CCD}	0.917	0.945	0.973	V	–
SID511	$V_{TR_F_LVBOD}$	LV BOD falling detection point for V_{CCD}	0.892	0.920	0.948	V	–
SID515	$t_{DLY_ACT_LVBOD}$	Active delay between V_{CCD} falling/rising through V_{TR_R/F_LVBOD} and an internal LV BOD signal transitioning	–	–	1	µs	Guaranteed by design
SID515A	$t_{DLY_DS_LVBOD}$	Deep Sleep mode delay between V_{CCD} falling/rising through V_{TR_R/F_LVBOD} and an internal LV BOD signal transitioning	–	–	12	µs	Guaranteed by design
SID516	t_{RES_LVBOD}	Response time of LV BOD (for falling-then-rising supply at max ramp rate; threshold is $V_{TR_F_LVBOD}$)	100	–	–	ns	Guaranteed by design
Low-voltage detector (LVD) DC specifications							
SID520	$V_{TR_2P8_F}$	LVD 2.8 V falling detection point for V_{DDD}	Typ – 4%	2800	Typ + 4%	mV	–
SID521	$V_{TR_2P9_F}$	LVD 2.9 V falling detection point for V_{DDD}	Typ – 4%	2900	Typ + 4%	mV	–
SID522	$V_{TR_3P0_F}$	LVD 3.0 V falling detection point for V_{DDD}	Typ – 4%	3000	Typ + 4%	mV	–
SID523	$V_{TR_3P1_F}$	LVD 3.1 V falling detection point for V_{DDD}	Typ – 4%	3100	Typ + 4%	mV	–
SID524	$V_{TR_3P2_F}$	LVD 3.2 V falling detection point for V_{DDD}	Typ – 4%	3200	Typ + 4%	mV	–
SID525	$V_{TR_3P3_F}$	LVD 3.3 V falling detection point for V_{DDD}	Typ – 4%	3300	Typ + 4%	mV	–
SID526	$V_{TR_3P4_F}$	LVD 3.4 V falling detection point for V_{DDD}	Typ – 4%	3400	Typ + 4%	mV	–
SID527	$V_{TR_3P5_F}$	LVD 3.5 V falling detection point for V_{DDD}	Typ – 4%	3500	Typ + 4%	mV	–
SID528	$V_{TR_3P6_F}$	LVD 3.6 V falling detection point for V_{DDD}	Typ – 4%	3600	Typ + 4%	mV	–
SID529	$V_{TR_3P7_F}$	LVD 3.7 V falling detection point for V_{DDD}	Typ – 4%	3700	Typ + 4%	mV	–
SID530	$V_{TR_3P8_F}$	LVD 3.8 V falling detection point for V_{DDD}	Typ – 4%	3800	Typ + 4%	mV	–
SID531	$V_{TR_3P9_F}$	LVD 3.9 V falling detection point for V_{DDD}	Typ – 4%	3900	Typ + 4%	mV	–
SID532	$V_{TR_4P0_F}$	LVD 4.0 V falling detection point for V_{DDD}	Typ – 4%	4000	Typ + 4%	mV	–
SID533	$V_{TR_4P1_F}$	LVD 4.1 V falling detection point for V_{DDD}	Typ – 4%	4100	Typ + 4%	mV	–
SID534	$V_{TR_4P2_F}$	LVD 4.2 V falling detection point for V_{DDD}	Typ – 4%	4200	Typ + 4%	mV	–
SID535	$V_{TR_4P3_F}$	LVD 4.3 V falling detection point for V_{DDD}	Typ – 4%	4300	Typ + 4%	mV	–
SID536	$V_{TR_4P4_F}$	LVD 4.4 V falling detection point for V_{DDD}	Typ – 4%	4400	Typ + 4%	mV	–

Table 44 System resources *(continued)*

Spec ID	Parameter	Description	Min	Typ	Max	Unit	Details/conditions
SID537	$V_{TR_4P5_F}$	LVD 4.5 V falling detection point for V_{DDD}	Typ – 4%	4500	Typ + 4%	mV	–
SID538	$V_{TR_4P6_F}$	LVD 4.6 V falling detection point for V_{DDD}	Typ – 4%	4600	Typ + 4%	mV	–
SID539	$V_{TR_4P7_F}$	LVD 4.7 V falling detection point for V_{DDD}	Typ – 4%	4700	Typ + 4%	mV	–
SID540	$V_{TR_4P8_F}$	LVD 4.8 V falling detection point for V_{DDD}	Typ – 4%	4800	Typ + 4%	mV	–
SID541	$V_{TR_4P9_F}$	LVD 4.9 V falling detection point for V_{DDD}	Typ – 4%	4900	Typ + 4%	mV	–
SID542	$V_{TR_5P0_F}$	LVD 5.0 V falling detection point for V_{DDD}	Typ – 4%	5000	Typ + 4%	mV	–
SID543	$V_{TR_5P1_F}$	LVD 5.1 V falling detection point for V_{DDD}	Typ – 4%	5100	Typ + 4%	mV	–
SID544	$V_{TR_5P2_F}$	LVD 5.2 V falling detection point for V_{DDD}	Typ – 4%	5200	Typ + 4%	mV	–
SID545	$V_{TR_5P3_F}$	LVD 5.3 V falling detection point for V_{DDD}	Typ – 4%	5300	Typ + 4%	mV	–
SID546	$V_{TR_2P8_R}$	LVD 2.8 V rising detection point for V_{DDD}	Typ – 4%	2825	Typ + 4%	mV	Same as $V_{TR_2P8_F}$ + 25 mV
SID547	$V_{TR_2P9_R}$	LVD 2.9 V rising detection point for V_{DDD}	Typ – 4%	2925	Typ + 4%	mV	Same as $V_{TR_2P9_F}$ + 25 mV
SID548	$V_{TR_3P0_R}$	LVD 3.0 V rising detection point for V_{DDD}	Typ – 4%	3025	Typ + 4%	mV	Same as $V_{TR_3P0_F}$ + 25 mV
SID549	$V_{TR_3P1_R}$	LVD 3.1 V rising detection point for V_{DDD}	Typ – 4%	3125	Typ + 4%	mV	Same as $V_{TR_3P1_F}$ + 25 mV
SID550	$V_{TR_3P2_R}$	LVD 3.2 V rising detection point for V_{DDD}	Typ – 4%	3225	Typ + 4%	mV	Same as $V_{TR_3P2_F}$ + 25 mV
SID551	$V_{TR_3P3_R}$	LVD 3.3 V rising detection point for V_{DDD}	Typ – 4%	3325	Typ + 4%	mV	Same as $V_{TR_3P3_F}$ + 25 mV
SID552	$V_{TR_3P4_R}$	LVD 3.4 V rising detection point for V_{DDD}	Typ – 4%	3425	Typ + 4%	mV	Same as $V_{TR_3P4_F}$ + 25 mV
SID553	$V_{TR_3P5_R}$	LVD 3.5 V rising detection point for V_{DDD}	Typ – 4%	3525	Typ + 4%	mV	Same as $V_{TR_3P5_F}$ + 25 mV
SID554	$V_{TR_3P6_R}$	LVD 3.6 V rising detection point for V_{DDD}	Typ – 4%	3625	Typ + 4%	mV	Same as $V_{TR_3P6_F}$ + 25 mV
SID555	$V_{TR_3P7_R}$	LVD 3.7 V rising detection point for V_{DDD}	Typ – 4%	3725	Typ + 4%	mV	Same as $V_{TR_3P7_F}$ + 25 mV
SID556	$V_{TR_3P8_R}$	LVD 3.8 V rising detection point for V_{DDD}	Typ – 4%	3825	Typ + 4%	mV	Same as $V_{TR_3P8_F}$ + 25 mV
SID557	$V_{TR_3P9_R}$	LVD 3.9 V rising detection point for V_{DDD}	Typ – 4%	3925	Typ + 4%	mV	Same as $V_{TR_3P9_F}$ + 25 mV
SID558	$V_{TR_4P0_R}$	LVD 4.0 V rising detection point for V_{DDD}	Typ – 4%	4025	Typ + 4%	mV	Same as $V_{TR_4P0_F}$ + 25 mV
SID559	$V_{TR_4P1_R}$	LVD 4.1 V rising detection point for V_{DDD}	Typ – 4%	4125	Typ + 4%	mV	Same as $V_{TR_4P1_F}$ + 25 mV
SID560	$V_{TR_4P2_R}$	LVD 4.2 V rising detection point for V_{DDD}	Typ – 4%	4225	Typ + 4%	mV	Same as $V_{TR_4P2_F}$ + 25 mV
SID561	$V_{TR_4P3_R}$	LVD 4.3 V rising detection point for V_{DDD}	Typ – 4%	4325	Typ + 4%	mV	Same as $V_{TR_4P3_F}$ + 25 mV
SID562	$V_{TR_4P4_R}$	LVD 4.4 V rising detection point for V_{DDD}	Typ – 4%	4425	Typ + 4%	mV	Same as $V_{TR_4P4_F}$ + 25 mV

Table 44 System resources *(continued)*

Spec ID	Parameter	Description	Min	Typ	Max	Unit	Details/conditions
SID563	$V_{TR_4P5_R}$	LVD 4.5 V rising detection point for V_{DDD}	Typ – 4%	4525	Typ + 4%	mV	Same as $V_{TR_4P5_F}$ + 25 mV
SID564	$V_{TR_4P6_R}$	LVD 4.6 V rising detection point for V_{DDD}	Typ – 4%	4625	Typ + 4%	mV	Same as $V_{TR_4P6_F}$ + 25 mV
SID565	$V_{TR_4P7_R}$	LVD 4.7 V rising detection point for V_{DDD}	Typ – 4%	4725	Typ + 4%	mV	Same as $V_{TR_4P7_F}$ + 25 mV
SID566	$V_{TR_4P8_R}$	LVD 4.8 V rising detection point for V_{DDD}	Typ – 4%	4825	Typ + 4%	mV	Same as $V_{TR_4P8_F}$ + 25 mV
SID567	$V_{TR_4P9_R}$	LVD 4.9 V rising detection point for V_{DDD}	Typ – 4%	4925	Typ + 4%	mV	Same as $V_{TR_4P9_F}$ + 25 mV
SID568	$V_{TR_5P0_R}$	LVD 5.0 V rising detection point for V_{DDD}	Typ – 4%	5025	Typ + 4%	mV	Same as $V_{TR_5P0_F}$ + 25 mV
SID569	$V_{TR_5P1_R}$	LVD 5.1 V rising detection point for V_{DDD}	Typ – 4%	5125	Typ + 4%	mV	Same as $V_{TR_5P1_F}$ + 25 mV
SID570	$V_{TR_5P2_R}$	LVD 5.2 V rising detection point for V_{DDD}	Typ – 4%	5225	Typ + 4%	mV	Same as $V_{TR_5P2_F}$ + 25 mV
SID571	$V_{TR_5P3_R}$	LVD 5.3 V rising detection point for V_{DDD}	Typ – 4%	5325	Typ + 4%	mV	Same as $V_{TR_5P3_F}$ + 25 mV
SID573	LVD_RR_A	Power ramp rate: V_{DDD} (Active)	–	–	100	mV/µs	–
SID574	LVD_RR_DS	Power ramp rate: V_{DDD} (Deep Sleep)	–	–	10	mV/µs	–
SID575	$t_{DLY_ACT_LVD}$	Active mode delay between V_{DDD} falling/rising through LVD rising/falling point and an internal LVD signal transitioning	–	–	1	µs	Guaranteed by design
SID575A	$t_{DLY_DS_LVD}$	Deep Sleep mode delay between V_{DDD} falling/rising through LVD rising/falling point and an internal LVD signal transitioning	–	–	4	µs	Guaranteed by design
SID576	t_{RES_LVD}	Response time of LVD, V_{DDD} supply. (For falling-then-rising supply at max ramp rate; threshold is LVD falling point)	100	–	–	ns	Guaranteed by design
High-voltage OVD specifications							
SID580	$V_{TR_5P0_R}$	HV OVD 5.0-V rising detection point for V_{DDD} and V_{DDA}	5.049	5.205	5.361	V	–
SID581	$V_{TR_5P0_F}$	HV OVD 5.0-V falling detection point for V_{DDD} and V_{DDA}	5.025	5.18	5.335	V	–
SID582	$V_{TR_5P5_R}$	HV OVD 5.5-V rising detection point for V_{DDD} and V_{DDA} (default)	5.548	5.72	5.892	V	–
SID583	$V_{TR_5P5_F}$	HV OVD 5.5-V falling detection point for V_{DDD} and V_{DDA} (default)	5.524	5.695	5.866	V	–
SID585	HVOVD_RR_A	Power ramp rate: V_{DDD} and V_{DDA} (Active)	–	–	100	mV/µs	–
SID586	HVOVD_RR_DS	Power ramp rate: V_{DDD} and V_{DDA} (Deep Sleep)	–	–	10	mV/µs	–
SID587	$t_{DLY_ACT_HVOVD}$	Active mode delay between V_{DDD} falling/rising through $V_{TR_5P0_F/R}$ or $V_{TR_5P5_F/R}$ and an internal HV OVD signal transitioning	–	–	1	µs	Guaranteed by design

Table 44 System resources *(continued)*

Spec ID	Parameter	Description	Min	Typ	Max	Unit	Details/conditions
SID587A	$t_{DLY_ACT_H-VOVD_A}$	Active mode delay between V_{DDA} falling/rising through $V_{TR_5P0_F/R}$ or $V_{TR_5P5_F/R}$ and an internal HV OVD signal transitioning	–	–	1.5	µs	Guaranteed by design
SID587B	$t_{DLY_DS_HVOVD}$	Deep Sleep mode delay between V_{DDD}/V_{DDA} falling/rising through $V_{TR_5P0_F/R}$ or $V_{TR_5P5_F/R}$ and an internal HV OVD signal transitioning	–	–	4	µs	Guaranteed by design
SID588	t_{RES_HVOVD}	Response time of HV OVD (for rising-then-falling supply at max ramp rate; threshold is $V_{TR_5P0_R}$ or $V_{TR_5P5_R}$)	100	–	–	ns	Guaranteed by design
Low-voltage OVD specifications							
SID590	$V_{TR_R_LVOVD}$	LV OVD rising detection point for V_{CCD}	1.261	1.3	1.339	V	–
SID591	$V_{TR_F_LVOVD}$	LV OVD falling detection point for V_{CCD}	1.237	1.275	1.313	V	–
SID595	$t_{DLY_ACT_LVOVD}$	Active mode delay between V_{CCD} falling/rising through V_{TR_F/R_LVOVD} and an internal LV OVD signal transitioning	–	–	1	µs	Guaranteed by design
SID595A	$t_{DLY_DS_LVOVD}$	Deep Sleep mode delay between V_{CCD} falling/rising through V_{TR_F/R_LVOVD} and an internal LV OVD signal transitioning	–	–	12	µs	Guaranteed by design
SID596	t_{RES_LVOVD}	Response time of LV OVD. (For rising-then-falling supply at max ramp rate; threshold is $V_{TR_R_LVOVD}$)	100	–	–	ns	Guaranteed by design
Over current detection (OCD) specifications							
SID598A	I_{OCD_LDO}	Over current detection range for internal Active regulator	312	–	630	mA	Guaranteed by design
SID598B	I_{OCD_EXT}	Over current detection range for external transistor mode	675	–	825	mA	–
SID599	I_{OCD_DPSLP}	Over current detection range for internal Deep Sleep regulator	18	–	72	mA	–

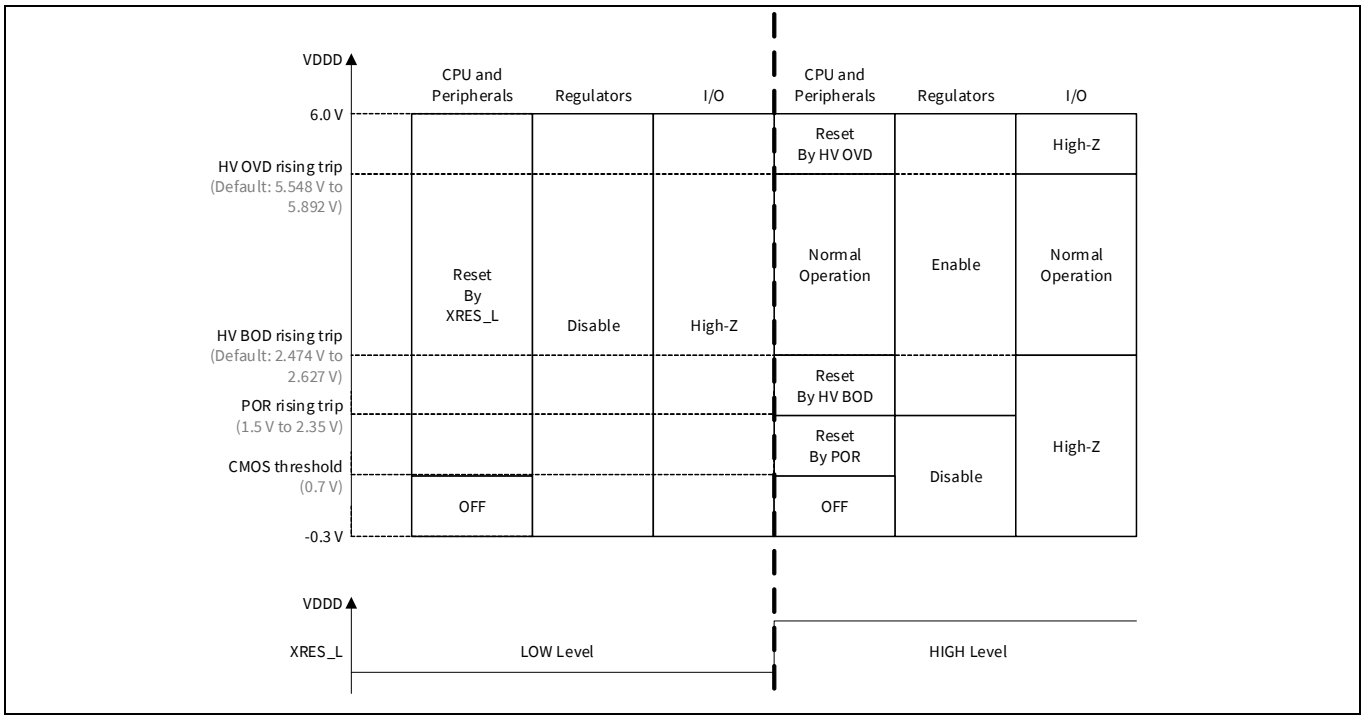

Figure 28 Device operations supply range

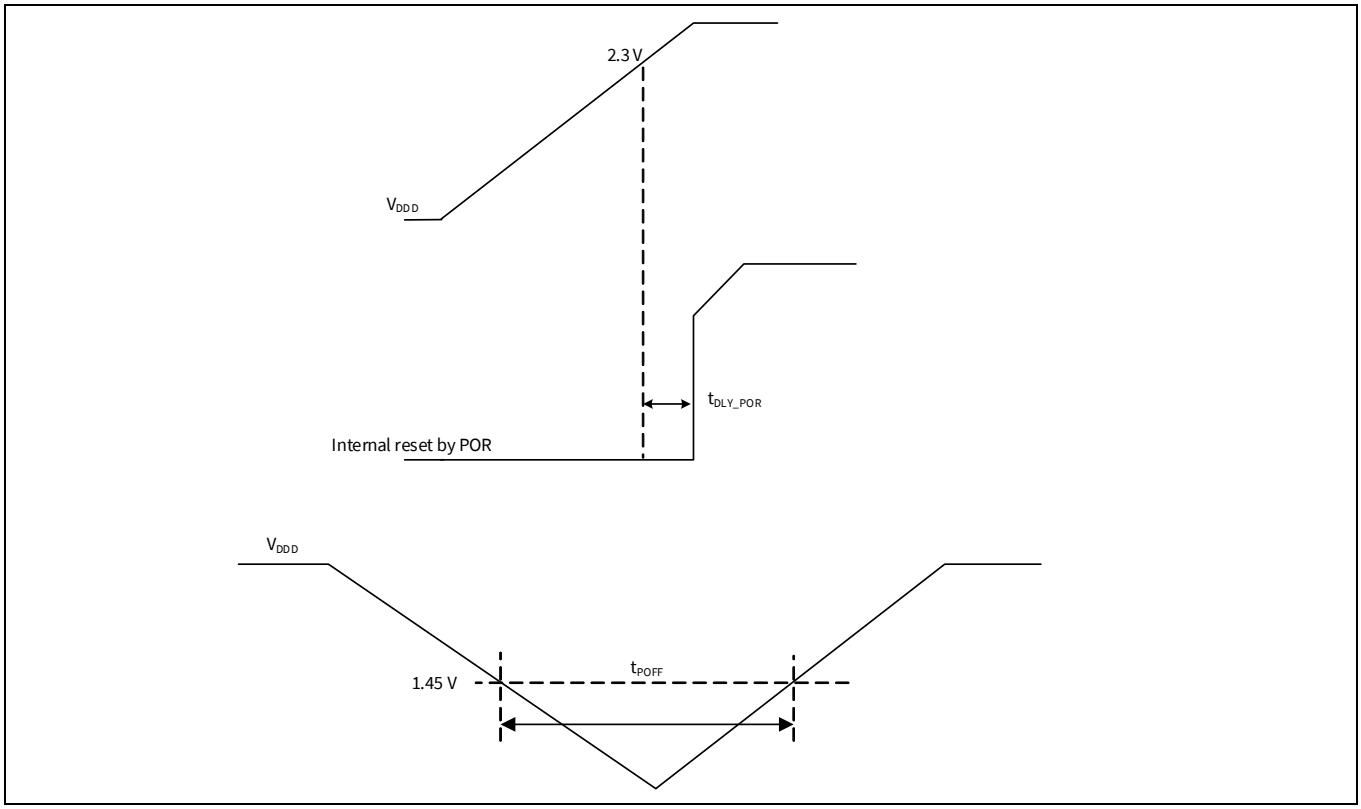

Figure 29 POR specifications

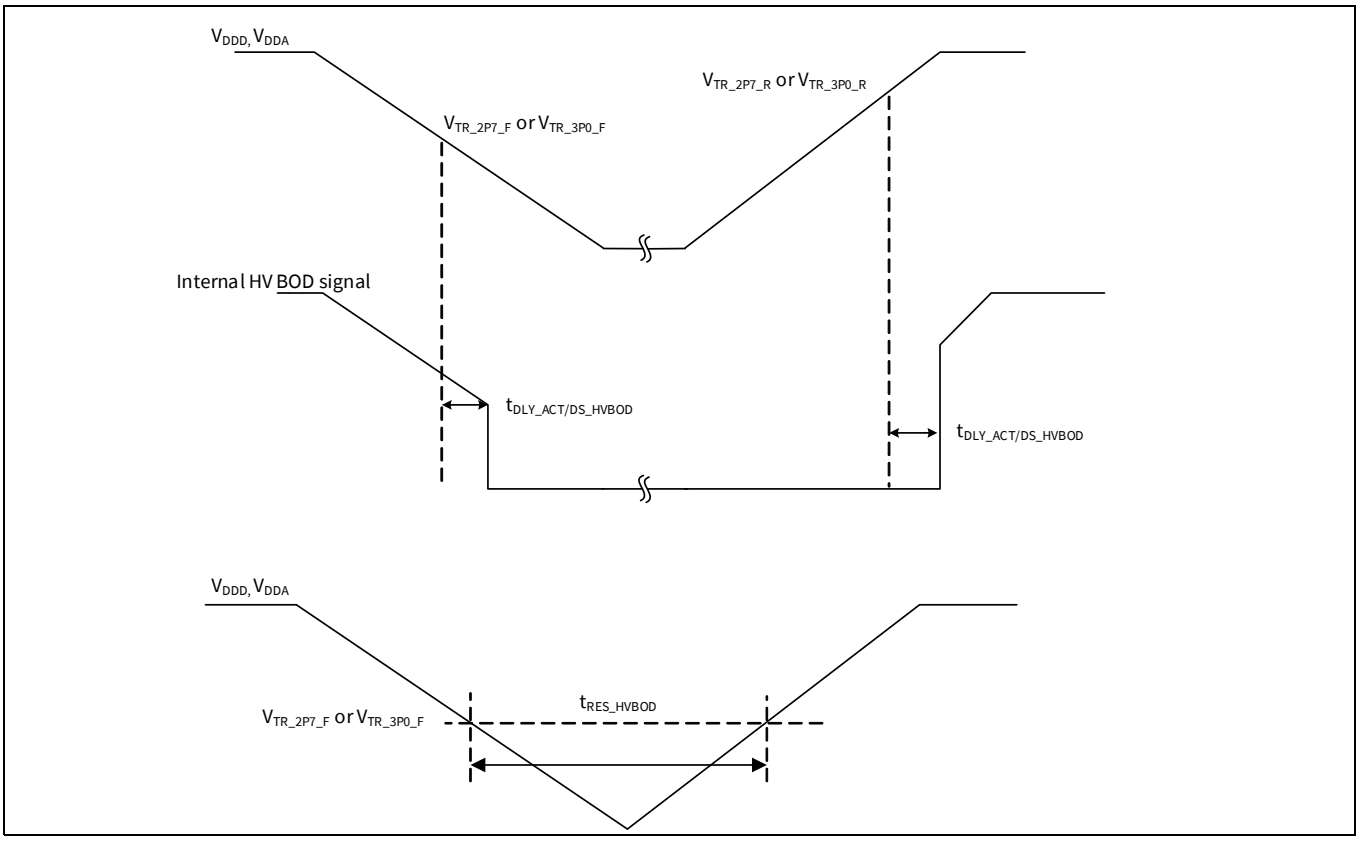

Figure 30 High-voltage BOD specifications

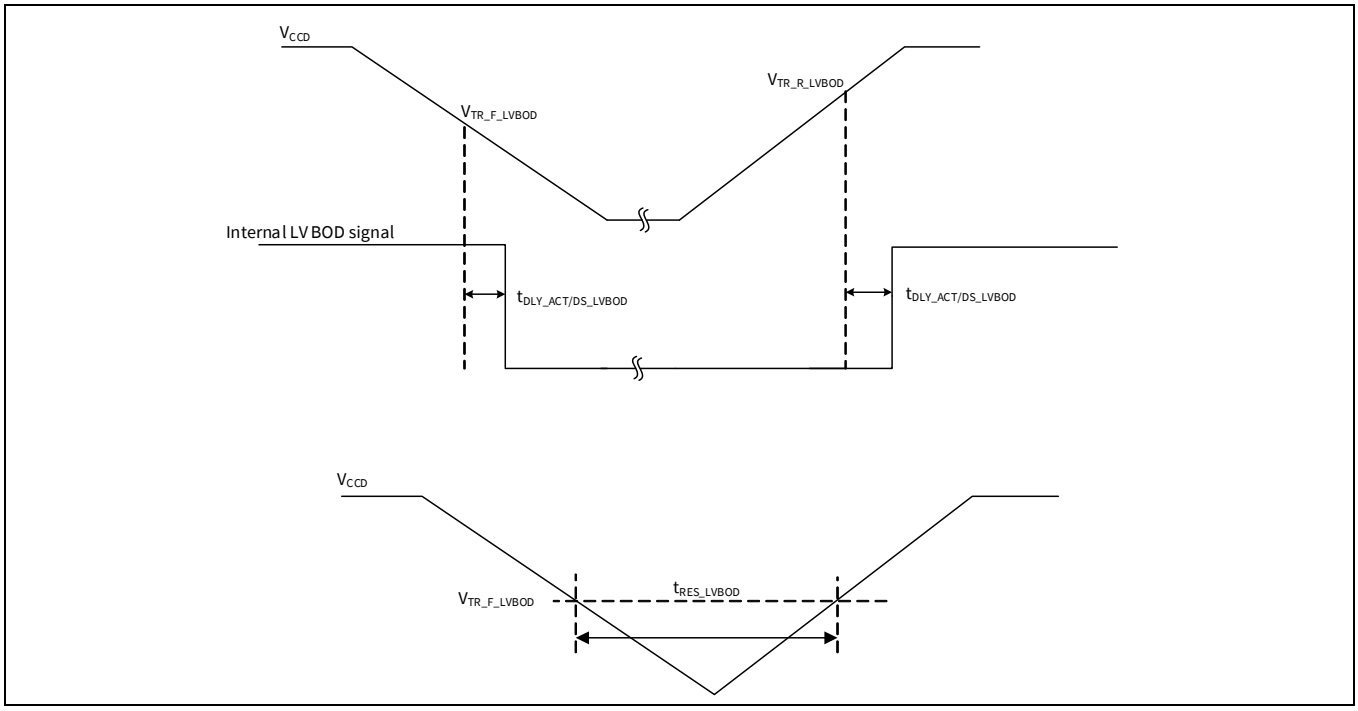

Figure 31 Low-voltage BOD specifications

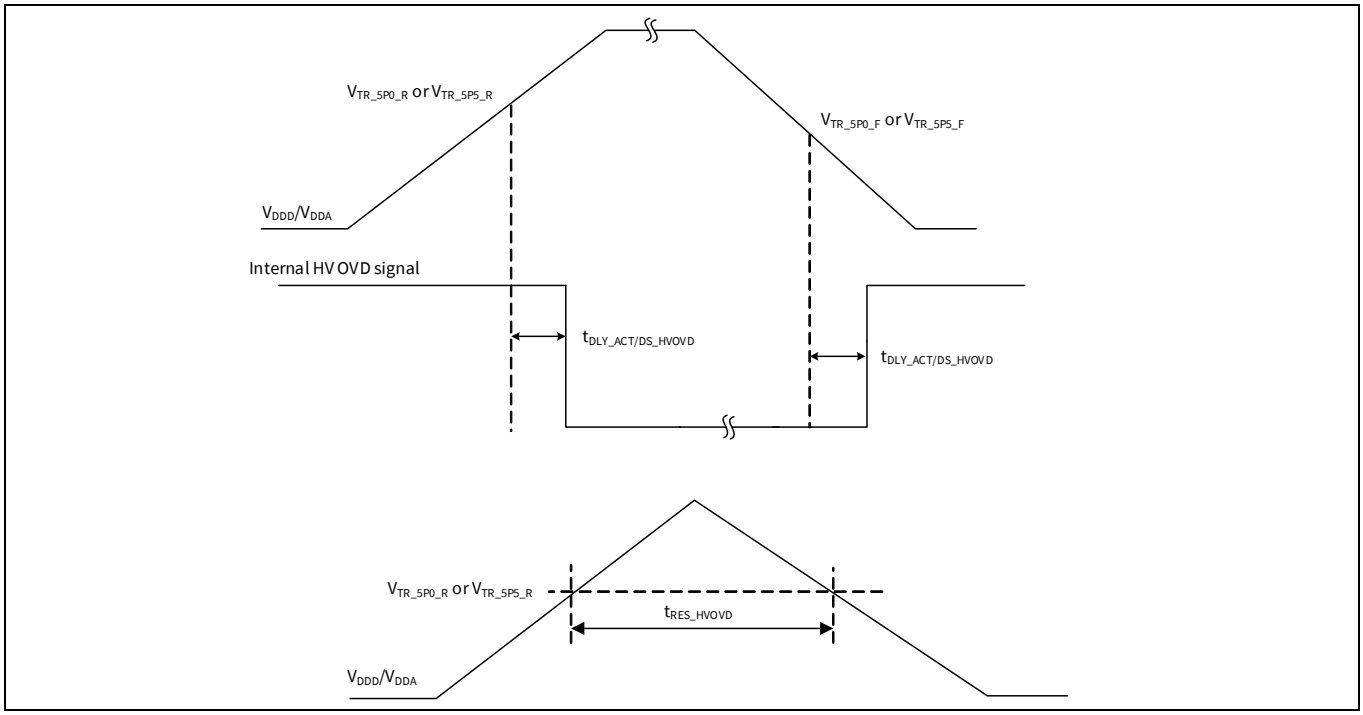

Figure 32 High-voltage OVD specifications

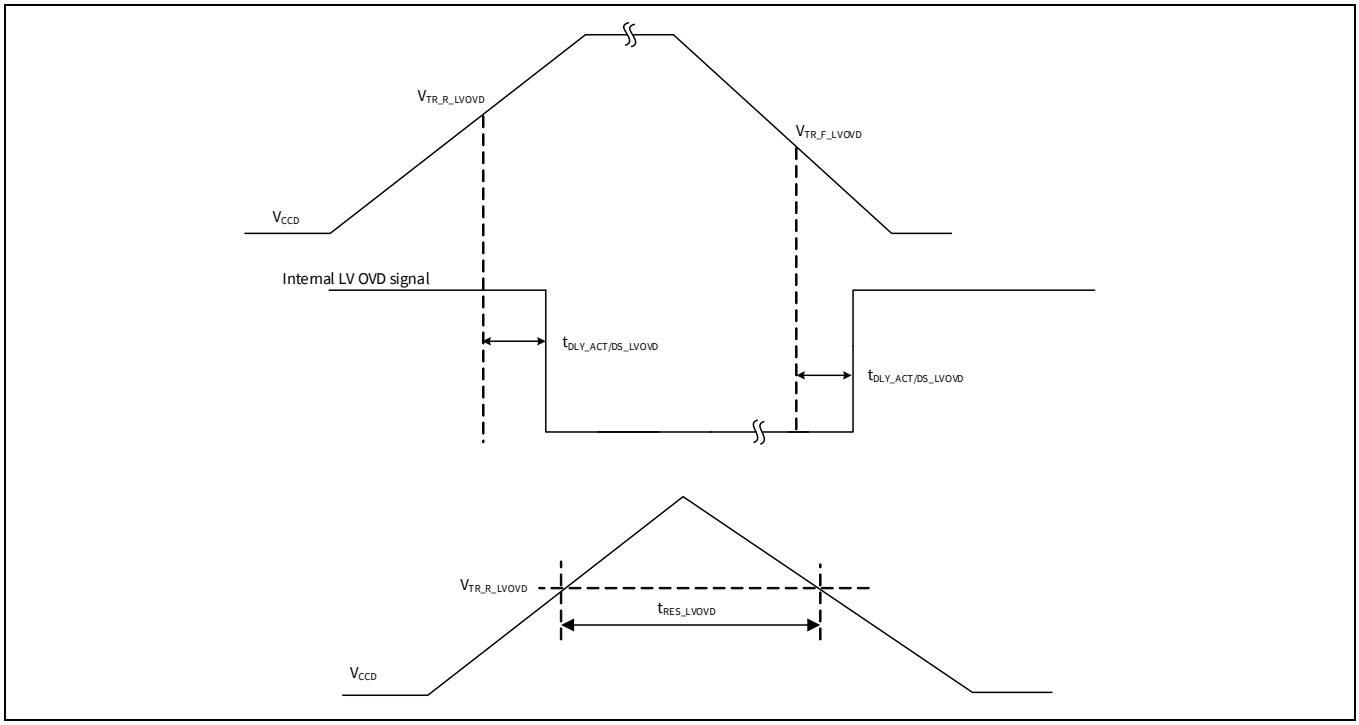

Figure 33 Low-voltage OVD specifications

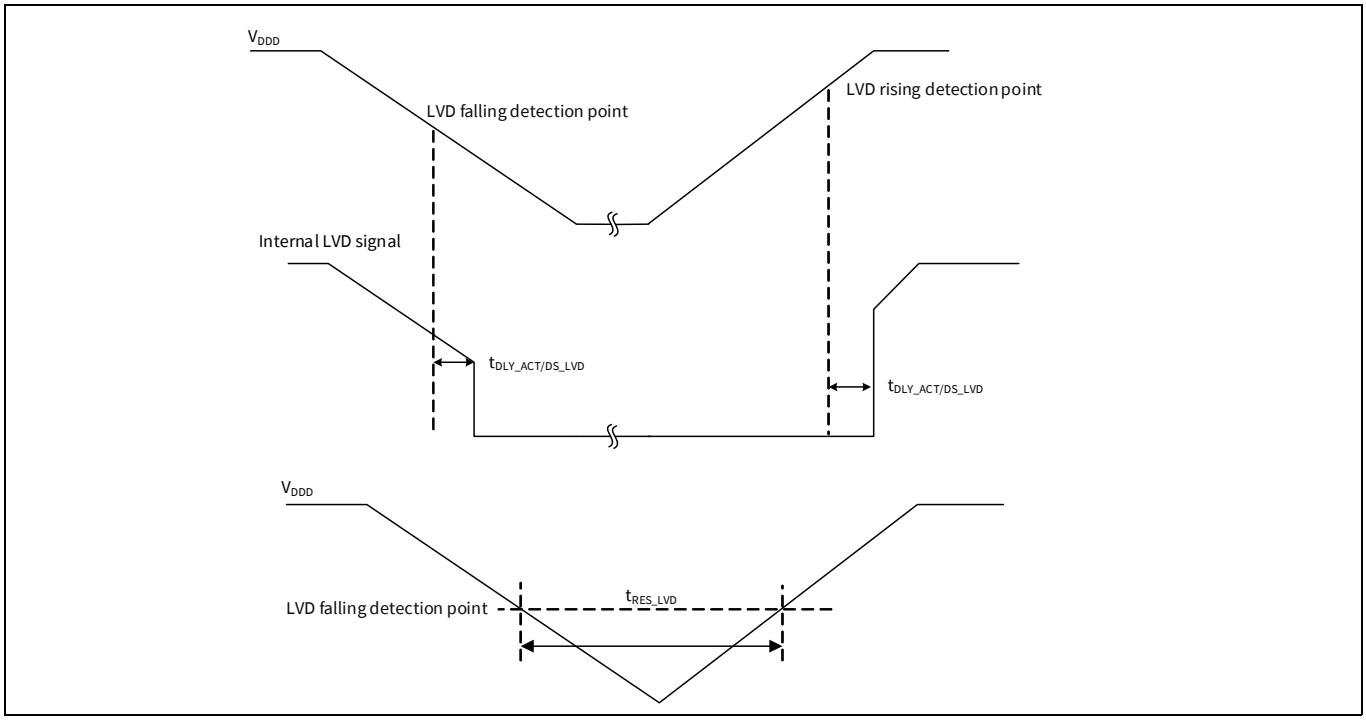

Figure 34 LVD specifications

26.11.1 SWD interface

Table 45 SWD interface specifications [Conditions: drive_sel<1:0>= 00]

Spec ID	Parameter	Description	Min	Typ	Max	Unit	Details/conditions
SID300	f_{SWDCLK}	SWD clock input frequency	–	–	10	MHz	2.7 V ≤ V_{DDD} ≤ 5.5 V
SID301	t_{SWDI_SETUP}	SWDI setup time	0.25 × T	–	–	ns	T = 1 / f_{SWDCLK}
SID302	t_{SWDI_HOLD}	SWDI hold time	0.25 × T	–	–	ns	T = 1 / f_{SWDCLK}
SID303	t_{SWDO_VALID}	SWDO valid time	–	–	0.5 × T	ns	T = 1 / f_{SWDCLK}
SID304	t_{SWDO_HOLD}	SWDO hold time	1	–	–	ns	T = 1 / f_{SWDCLK}

Table 46 JTAG AC specifications [Conditions: drive_sel<1:0>= 00]

Spec ID	Parameter	Description	Min	Typ	Max	Unit	Details/conditions
SID620	t_{JCKH}	TCK HIGH time	30	–	–	ns	30-pF load
SID621	t_{JCKL}	TCK LOW time	30	–	–	ns	30-pF load
SID622	t_{JCP}	TCK clock period	66.7	–	–	ns	30-pF load
SID623	t_{JSU}	TDI/TMS setup time	12	–	–	ns	30-pF load
SID624	t_{JH}	TDI/TMS hold time	12	–	–	ns	30-pF load
SID625	t_{JZX}	TDO High-Z to active	–	–	30	ns	30-pF load
SID626	t_{JXZ}	TDO active to High-Z	–	–	30	ns	30-pF load
SID627	t_{JCO}	TDO clock to output	–	–	30	ns	30-pF load

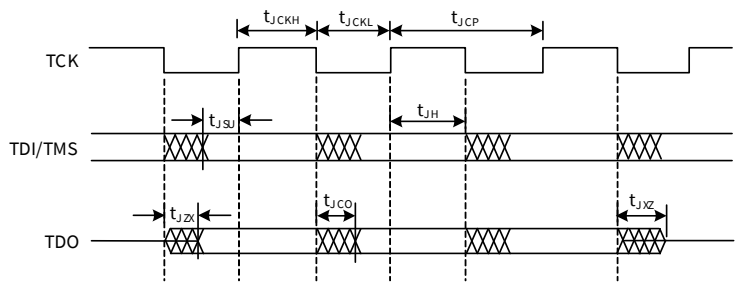

Figure 35 JTAG specifications

Table 47 Trace specifications [Conditions: drive_sel<1:0>= 00]

Spec ID	Parameter	Description	Min	Typ	Max	Unit	Details/conditions
SID1412A	C_{TRACE}	Trace capacitive load	–	–	30	pF	–
SID1412	t_{TRACE_CYC}	Trace clock period	40	–	–	ns	Trace clock cycle time for 25 MHz
SID1413	t_{TRACE_CLKL}	Trace clock LOW pulse width	2	–	–	ns	Clock low pulse width
SID1414	t_{TRACE_CLKH}	Trace clock HIGH pulse width	2	–	–	ns	Clock high pulse width
SID1415A	t_{TRACE_SETUP}	Trace data setup time	3	–	–	ns	Trace data setup time
SID1416A	t_{TRACE_HOLD}	Trace data hold time	2	–	–	ns	Trace data hold time

26.12 Clock specifications

All specifications are valid for –40°C <= TA <= 125°C and for 2.7 V to 5.5 V except where noted.

Table 48 Root and intermediate clocks[68]

Clock	Max frequency (MHz)	Source	Maximum permitted clock frequency setting (Mhz)						Description
			PLL/FLL Clock source: ECO			PLL/FLL Clock source: IMO			
			Integer	SSCG	Fractional	Integer	SSCG	Fractional	
CLK_HF0	160	PLL200#0	160	NA	NA	155	NA	NA	Root clock for CPUSS, PERI
		FLL	100	NA	NA	96	NA	NA	
	100	PLL200#0	100	NA	NA	98	NA	NA	
		FLL	100	NA	NA	96	NA	NA	
CLK_HF1	250	PLL400#0	250	240	250	242	237	239	CM7 CPU Core#0, CM7 CPU Core#1 clock
		FLL	100	NA	NA	96	NA	NA	
CLK_HF2	100	PLL200#1	100	NA	NA	98	NA	NA	Peripheral clock root other than CLK_PERI
		FLL	100	NA	NA	96	NA	NA	
CLK_HF3	100	PLL200#1	100	NA	NA	98	NA	NA	Event generator (CLK_REF), clock output on EXT_CLK pins (when used as output)
		FLL	100	NA	NA	96	NA	NA	
CLK_HF4	50	PLL200#1	50	NA	NA	48	NA	NA	Ethernet Channel#0, Ethernet Channel#1 internal clock
		FLL	50	NA	NA	48	NA	NA	
CLK_HF5	196.608	PLL400#1	196.608	193	196.608	189	185	187	I^2S channel#0, I^2S channel#1, I^2S channel#2 interface clock, Ethernet Channel#0 TSU
		FLL	100	NA	NA	96	NA	NA	
CLK_HF6	200	PLL200#1	200	NA	NA	190	NA	NA	Root clock for SDHC, SMIF interface clock
		FLL	100	NA	NA	96	NA	NA	
CLK_HF7	8	ILO	NA	NA	NA	NA	NA	NA	CSV
CLK_FAST_0	250	PLL400#0	250	240	250	242	237	239	Generated by clock gating CLK_HF1, CM7 CPU Core#0, intermediate clock
		FLL	100	NA	NA	96	NA	NA	
CLK_FAST_1	250	PLL400#0	250	240	250	242	237	239	Generated by clock gating CLK_HF1, CM7 CPU Core#0, intermediate clock
		FLL	100	NA	NA	96	NA	NA	
CLK_MEM	160	PLL200#0	160	NA	NA	155	NA	NA	Generated by clock gating CLK_HF0, intermediate clock for SMIF, Flash
		FLL	100	NA	NA	96	NA	NA	
	100	PLL200#0	100	NA	NA	98	NA	NA	
		FLL	100	NA	NA	96	NA	NA	

Note
67. Intermediate clocks that are not listed have the same limitations as that of their parent clock.

Table 48 Root and intermediate clocks[68]

Clock	Max frequency (MHz)	Source	Maximum permitted clock frequency setting (Mhz)						Description
			PLL/FLL Clock source: ECO			PLL/FLL Clock source: IMO			
			Integer	SSCG	Fractional	Integer	SSCG	Fractional	
CLK_SLOW	100	PLL200#0	100	NA	NA	98	NA	NA	Generated by clock gating CLK_MEM, intermediate clock for CM0+, P-DMA, M-DMA, Crypto, SMIF, SDHC, Ethernet
		FLL	100	NA	NA	96	NA	NA	
CLK_PERI	100	PLL200#0	100	NA	NA	98	NA	NA	Generated by clock gating CLK_HF0, intermediate clock for IOSS, TCPWM0, CPU trace, SMIF
		FLL	100	NA	NA	96	NA	NA	

Note
67.Intermediate clocks that are not listed have the same limitations as that of their parent clock.

Table 49 Relation between CLK_HF0 and CLK_SLOW (Example)[68]

CLK_HF0 (MHz)	CLK_SLOW (MHz)
160	80
120	60
100	100
80	80

PLL400 operation mode	Spread spectrum clock generation (SSCG)	Fractional
OFF	OFF	Integer
OFF	OFF	SSCG
OFF	OFF	Fractional

Note
68.CLOCK_SLOW and CLK_HF0 are related by integer frequency ratio (that is, 1:1, 1:2, 1:3, and so on).

Table 50 IMO AC specifications

Spec ID	Parameter	Description	Min	Typ	Max	Unit	Details/conditions
SID310	f_{IMOTOL}	IMO operating frequency	7.68	8	8.32	MHz	–
SID311	tSTARTIMO	IMO start-up time	–	–	7.5	µs	Start-up time to 90% of final frequency
SID312	IIMO_ACT	IMO current	–	13.5	22	µA	–

Table 51 ILO AC specifications

Spec ID	Parameter	Description	Min	Typ	Max	Unit	Details/conditions
SID320	$f_{ILOTRIM}$	ILO operating frequency	30.47424	32.768	35.06176	kHz	–
SID321	$t_{STARTILO}$	ILO start-up time	–	8	12	µs	Start-up time to 90% of final frequency
SID323	I_{ILO}	ILO current	–	500	2800	nA	–

Table 52 ECO specifications

Spec ID	Parameter	Description	Min	Typ	Max	Unit	Details/conditions
SID330	f_{ECO}	Crystal frequency range	8	–	33.34	MHz	–
SID332	R_{FDBK}	Feedback resistor value. Min: RTRIM = 3; Max: RTRIM = 0 with 100-kΩ step size on RTRIM	100	–	400	kΩ	Guaranteed by design
SID333	I_{ECO3}	ECO current at T_J = 150°C	–	–	2000	µA	Maximum operation current with a 33-MHz crystal, 18-pF load
SID334	t_{START_8M}	8 MHz ECO start-up time[69]	–	–	10	ms	Time from set CLK_ECO_-CONFIG.ECO_EN to 1 until CLK_ECO_STATUS.ECO_READY is set to 1 (See **Clock timing diagrams**)
SID335	t_{START_33M}	33 MHz ECO start-up time[69]	–	–	1	ms	Time from set CLK_ECO_-CONFIG.ECO_EN to 1 until CLK_ECO_STATUS.ECO_READY is set to 1 (See **Clock timing diagrams**)

Note
69. Mainly depends on the external crystal.

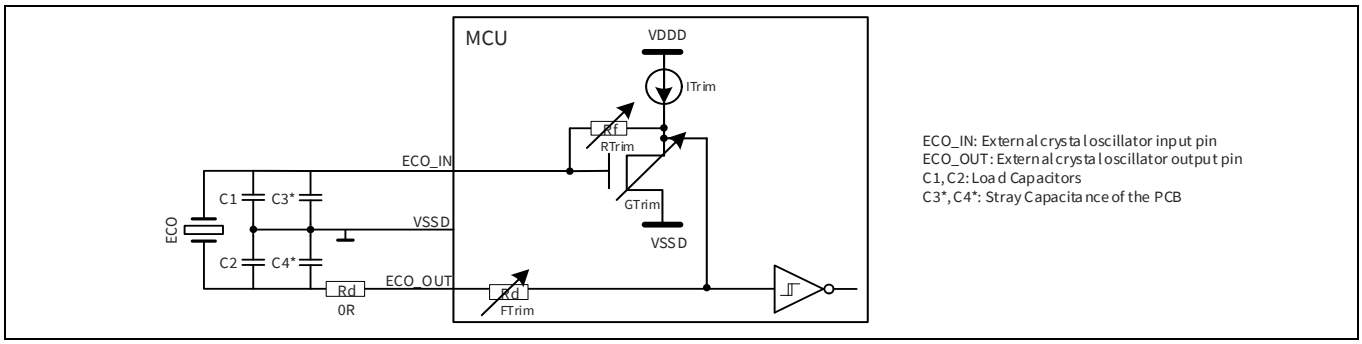

Figure 36 ECO connection scheme[70]

Table 53 PLL specifications

Spec ID	Parameter	Description	Min	Typ	Max	Units	Details/conditions
PLL (without SSCG and fractional divider) specifications for 200 MHz							
SID340	t_{PLL200_LOCK}	Time to achieve PLL lock	–	–	35	µs	Time from stable reference clock until PLL frequency is within 0.1% of final value and lock indicator is set
SID341	f_{PLL_OUT}	Output frequency from PLL block	11	–	200	MHz	–
SID342	PLL_LJIT1	Long term jitter	–0.25	–	0.25	ns	For 125 ns Guaranteed by design f_{PLL_VCO}: 320 MHz or 400 MHz f_{PLL_OUT}: 40 MHz to 200 MHz f_{PLL_PFD}: 8 MHz f_{PLL_IN}: ECO
SID343	PLL_LJIT2	Long term jitter	–0.5	–	0.5	ns	For 500 ns Guaranteed by design f_{PLL_VCO}: 320 MHz or 400 MHz f_{PLL_OUT}: 40 MHz to 200 MHz f_{PLL_PFD}: 8 MHz f_{PLL_IN}: ECO
SID344	PLL_LJIT3	Long term jitter	–0.5	–	0.5	ns	For 1000 ns Guaranteed by design f_{PLL_VCO}: 320 MHz or 400 MHz f_{PLL_OUT}: 40 MHz to 200 MHz f_{PLL_PFD}: 8 MHz f_{PLL_IN}: ECO
SID345A1	PLL_LJIT5	Long term jitter	–0.75	–	0.75	ns	For 10000 ns Guaranteed by design f_{PLL_VCO}: 320 MHz or 400 MHz f_{PLL_OUT}: 40 MHz to 200 MHz f_{PLL_PFD}: 8 MHz f_{PLL_IN}: ECO
SID346	f_{PLL_IN}	PLL input frequency	3.988	–	33.34	MHz	–
SID347	I_{PLL_200M}	PLL operating current (f_{OUT} = 200 MHz)	–	0.87	1.8	mA	f_{OUT} = 200 MHz

Notes

70. See the family-specific architecture reference manual for more information on crystal requirements (32-bit Arm® Cortex® -M7 Industrial Microcontroller XMC7000 family architecture reference manual).

Table 53 PLL specifications *(continued)*

Spec ID	Parameter	Description	Min	Typ	Max	Units	Details/conditions
SID348C	f_{PLL_VCO}	VCO frequency	170	–	400	MHz	–
SID349C	f_{PLL_PFD}	PFD frequency	3.988	–	8	MHz	–
PLL (with SSCG and fractional divider) specifications for 400 MHz							
SID340A	t_{PLL400_LOCK}	Time to achieve PLL lock	–	–	50	µs	Time from stable reference clock until PLL frequency is within 0.1% of final value and lock indicator is set
SID341A4	f_{OUT0_4M}	Programmed output frequency from PLL block	25	–	250	MHz	Integer mode
SID341B4	f_{OUT1_4M}	Programmed output frequency from PLL block	25	–	240	MHz	SSCG mode
SID343A	SPREAD_D	Spread spectrum modulation depth	0.5	–	3	%	Downspread only, triangle modulation
SID343B	f_{SPREAD_MR}	Spread spectrum modulation rate	–	–	32	kHz	Selected by modulation divider from fPFD
SID342D14	PLL400_LJIT14	Long term jitter	–0.25	–	0.25	ns	For 125 ns Guaranteed by design f_{VCO}: 800 MHz or 500 MHz Integer mode f_{IN}: ECO f_{PFD}: 4 MHz f_{OUT}: 100 MHz to 250 MHz
SID343D14	PLL400_LJIT24	Long term jitter	–0.5	–	0.5	ns	For 500 ns Guaranteed by design f_{VCO}: 800 MHz or 500 MHz Integer mode f_{IN}: ECO f_{PFD}: 4 MHz f_{OUT}: 100 MHz to 250 MHz
SID344D14	PLL400_LJIT34	Long term jitter	–1	–	1	ns	For 1000 ns Guaranteed by design f_{VCO}: 800 MHz or 500 MHz Integer mode f_{IN}: ECO f_{PFD}: 4 MHz f_{OUT}: 100 MHz to 250 MHz
SID345E14	PLL400_LJIT54	Long term jitter	–1.5	–	1.5	ns	For 10000 ns Guaranteed by design f_{VCO}: 800 MHz or 500 MHz Integer mode f_{IN}: ECO f_{PFD}: 4 MHz f_{OUT}: 100 MHz to 250 MHz
SID345A	f_{VCO}	VCO frequency	400	–	800	MHz	–
SID346A	f_{IN}	PLL input frequency	3.988	–	33.34	MHz	–
SID347A	I_{PLL_400M}	PLL operating current (f_{OUT} = 400 MHz)	–	1.4	2.2	mA	f_{OUT} = 400 MHz
SID348A	f_{PFD_S}	PFD Frequency (fIN / Reference divider)	3.988	–	20	MHz	Integer/SSCG mode
SID349A	f_{PFD_F}	PFD Frequency (fIN / Reference divider)	8	–	20	MHz	Fractional operation
SID341C	$f_{OUT_400_8S1}$	Output frequency from PLL Block SSCG mode	93	–	105	MHz	f_{PFD} = 8 MHz, f_{VCO} = 400 MHz, f_{OUT} = 100 MHz, Modulation frequency: f_{PFD} / 512, Modulation depth: 3%

Table 53 PLL specifications *(continued)*

Spec ID	Parameter	Description	Min	Typ	Max	Units	Details/conditions
SID342C	$t_{PLL_CJIT400_8S1}$	Cycle-to-cycle jitter SSCG mode	–710	–	710	ps	f_{PFD} = 8 MHz, f_{VCO} = 400 MHz, f_{OUT} = 100 MHz, Modulation frequency: f_{PFD} / 512, Modulation depth: 3%
SID341D	$f_{OUT_400_8S2}$	Output frequency from PLL BlockSSCG mode	93	–	105	MHz	f_{PFD} = 8 MHz, f_{VCO} = 400 MHz, f_{OUT} = 100 MHz, Modulation frequency: f_{PFD} / 256, Modulation depth: 3%
SID342D	$t_{PLL_CJIT400_8S2}$	Cycle-to-cycle jitter SSCG mode	–710	–	710	ps	f_{PFD} = 8 MHz, f_{VCO} = 400 MHz, f_{OUT} = 100 MHz, Modulation frequency: f_{PFD} / 256, Modulation depth: 3%

Table 54 FLL specifications

Spec ID	Parameter	Description	Min	Typ	Max	Unit	Details/conditions
SID350	t_{FLL_WAKE}	FLL wake up time	–	–	5	µs	Wakeup with < 10°C temperature change while in Deep Sleep. f_{FLL_IN} = 8 MHz, f_{FLL_OUT} = 100 MHz, Time from stable reference clock until FLL frequency is within 5% of final value
SID351	f_{FLL_OUT}	Output frequency from FLL block	24	–	100	MHz	Output range of FLL divided-by-2 output
SID352	FLL_CJIT	FLL frequency accuracy	–1	–	1	%	This is added to the error of the source
SID353	f_{FLL_IN}	Input frequency	0.25	–	80	MHz	–
SID354	I_{FLL}	FLL operating current	–	250	360	µA	Reference clock: IMO, CCO frequency: 200 MHz, FLL frequency: 100 MHz, guaranteed by design

Table 55 WCO specifications

Spec ID	Parameter	Description	Min	Typ	Max	Units	Details/conditions
SID360	f_{WCO}	Crystal frequency	–	32.768	–	kHz	Maximum drive level: 0.5 µW
SID361	WCO_DC	WCO duty cycle	10	–	90	%	–
SID362E	t_{START_WCOE}	WCO start-up time[72]	–	–	1400	ms	Time from set CTL.WCO_EN to 1 until STATUS.WCO_OK is set to 1. (See **Clock timing diagrams**)
SID363	I_{WCO}	WCO current	–	1.4	–	µA	–

Note
71. Mainly depends on the external crystal.

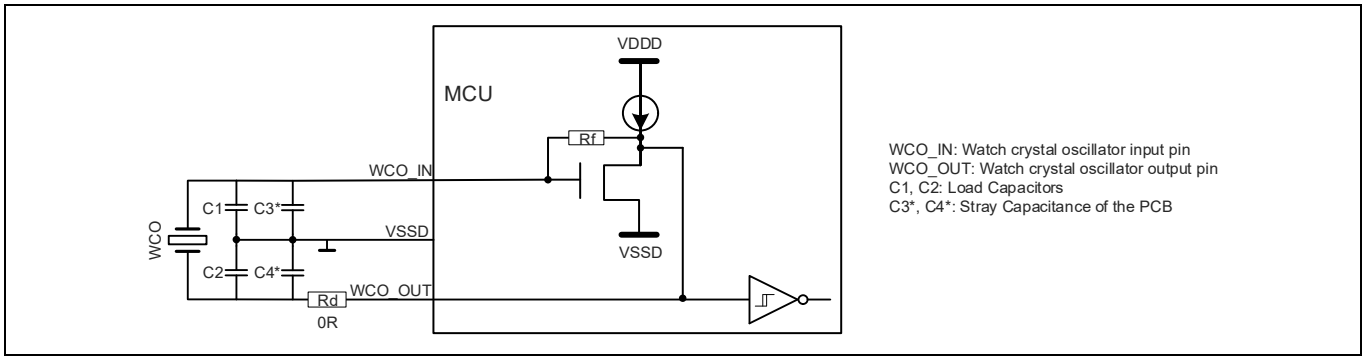

Figure 37 WCO connection scheme[72]

Table 56 External clock input specifications

Spec ID	Parameter	Description	Min	Typ	Max	Unit	Details/conditions
SID366	f_{EXT}	External clock input frequency	0.25	–	80	MHz	For EXT_CLK pin (all input level settings: CMOS, TTL, Industrial)
SID367	EXT_DC	External clock duty cycle	45	–	55	%	–

Table 57 MCWDT timeout specifications

Spec ID	Parameter	Description	Min	Typ	Max	Unit	Details/conditions
SID410	t_{MCWDT1}	Minimum MCWDT timeout	57	–	–	µs	When using the ILO (32.768 kHz + 7%) and 16-bit MCWDT counter Guaranteed by design
SID411	t_{MCWDT2}	Maximum MCWDT timeout	–	–	2.15	s	When using the ILO (32.768 kHz – 7%) and 16-bit MCWDT counter Guaranteed by design

Table 58 WDT timeout specifications

Spec ID	Parameter	Description	Min	Typ	Max	Unit	Details/conditions
SID412	t_{WDT1}	Minimum WDT timeout	57	–	–	µs	When using the ILO (32.768 kHz + 7%) and 16-bit WDT counter, guaranteed by design
SID413	t_{WDT2}	Maximum WDT timeout	–	–	39.15	h	When using the ILO (32.768 kHz – 7%) and 16-bit WDT counter, guaranteed by design
SID414	t_{WDT3}	Default WDT timeout	–	1000	–	ms	When using the ILO and 32-bit WDT counter at 0x8000 (default value), guaranteed by design

Note

72. See the family-specific architecture reference manual for more information on crystal requirements (32-bit Arm® Cortex® -M7 Industrial microcontroller XMC7000 family architecture reference manual).

26.13 Clock timing diagrams

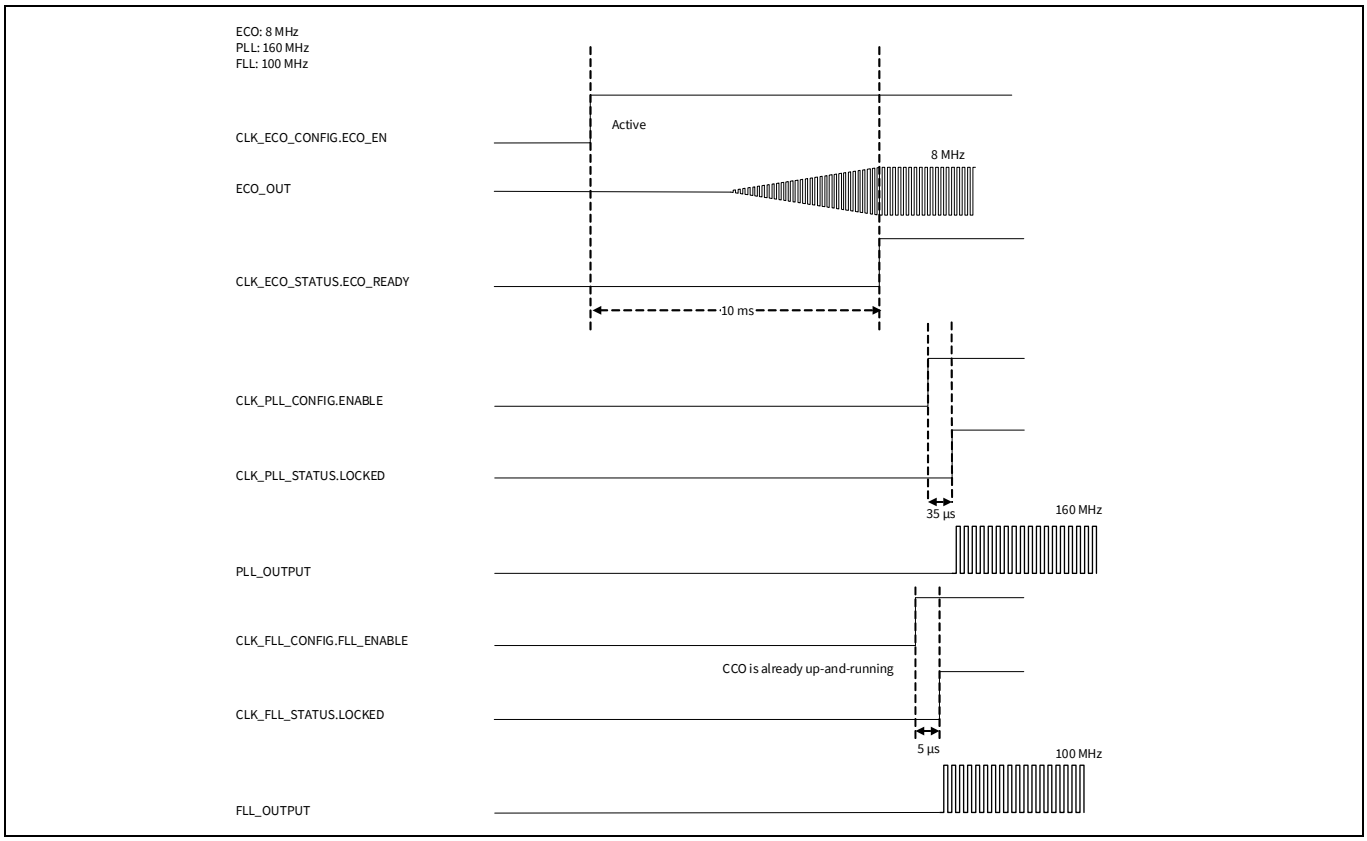

Figure 38 ECO to PLL or FLL diagram

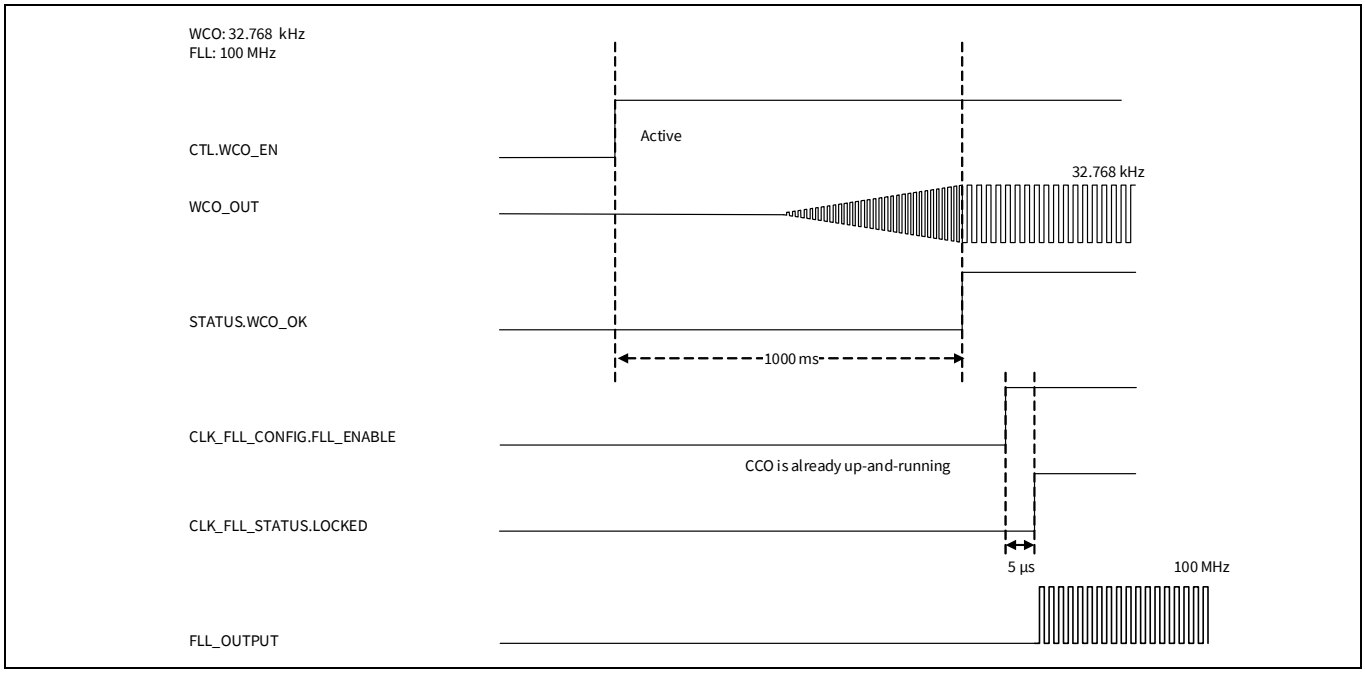

Figure 39 WCO to FLL diagram

26.14 Ethernet specifications

Table 59 Ethernet specifications [Conditions: drive_sel<1:0>= 00]

Spec ID	Parameter	Description	Min	Typ	Max	Unit	Details/conditions
Ethernet general specifications							
SID368	f_{SYS}	System clock max frequency	–	–	100	MHz	Guaranteed by design
SID399	V_{ETH}	Ethernet MAC I/O supply voltage	3.0	–	3.6	V	For V_{DDD}
SID364A	C_{L_MD}	Load capacitance	–	–	25	pF	For MDIO all signals between MAC and PHY using GPIO_STD
SID364A2	C_{L_MG}	Load capacitance	–	–	15	pF	For MII and RMII all signals between MAC and PHY using GPIO_STD
SID365A	t_{RF}	Rise / fall time	–	–	2	ns	20% to 80%, for MII, RMII, and MDIO using GPIO_STD
Ethernet MII specifications for GPIO_STD							
SID375	f_{TXRX_CLK}	MII TX/RX_CLK Clock frequency at 100 Mbps	-100 ppm	25	100 ppm	MHz	–
SDI376	DUTY_REF	Duty cycle of reference clock	35	–	65	%	–
SID372	t_{SKEWT}	MII Transmit data (TXD,TX_CTL,TX_ER) valid after TX_CLK	0.5	–	25	ns	–
SID373	t_{SUR}	MII Receive data setup to RX_CLK rising edge	10	–	–	ns	–
SID374	t_{HOLDR}	MII Receive data hold to RX_CLK rising edge	10	–	–	ns	–
Ethernet RMII specifications for GPIO_STD							
SID375A	f_{REF_CLK}	RMII reference Clock frequency	-50 ppm	50	50 ppm	MHz	External clock
SID376A	DUTY_REF	Duty cycle of reference clock	35	–	65	%	–
SID377	t_{SU}	RXD[1:0], RX_CTL, RX_ER Data Setup to REF_CLK rising edge	4	–	–	ns	–
SID378	t_{HOLD}	RXD[1:0], RX_CTL, RX_ER, Data hold from REF_CLK rising edge	2	–	–	ns	–
SID393	t_{TXOUT}	TX_CTL,TXD[1:0], Data output delay from REF_CLK rising edge	2	–	14.6	ns	For GPIO_STD
Ethernet MDIO Specifications for GPIO_STD							
SID395	t_{MDCYC}	MDC clock cycle	400	–	–	ns	–
SID395A	t_{HL_MDCYC}	The minimum HIGH and LOW times for MDC	160	–	–	ns	–
SID396	t_{MDIS}	MDIO input setup time to MDC rising edge	100	–	–	ns	–
SID397	t_{MDIH}	MDIO input hold time to MDC rising edge	0	–	–	ns	–
SID398	t_{MDIO}	MDIO output skew from MDC rising edge	10	–	390	ns	–

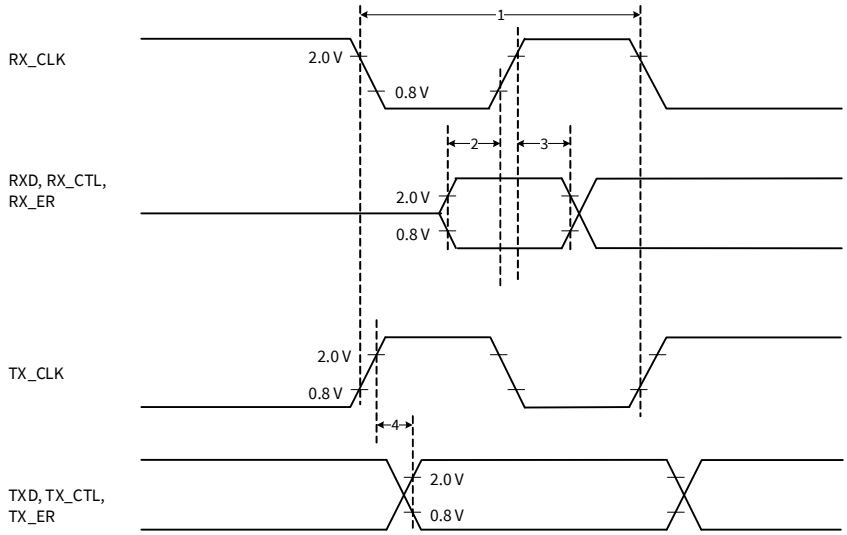

1: RX_CLK or TX_CLK cycle = $1/f_{TXRX_CLK}$
2: MII receive data setup time to RX_CLK rising edge = t_{SUR}
3: MII receive data hold time to RX_CLK rising edge = t_{HOLDR}
4: MII transmit data valid after TX_CLK rising edge = t_{SKEWT}

Figure 40 MII timing diagram

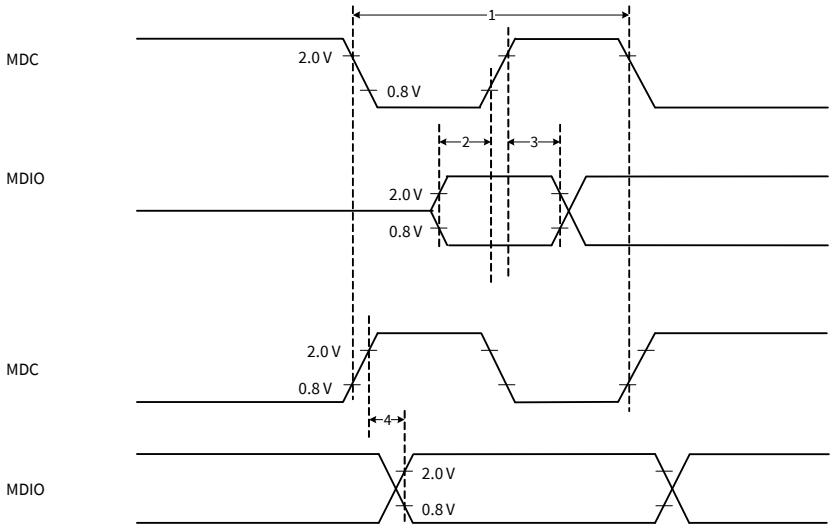

1: MDC clock cycle = t_{MDCCYC}
2: MDIO input setup time to MDC rising edge = t_{MDIS}
3: MDIO input hold time tp MDC rising edge = t_{MDIH}
4: MDIO output skew from MDC rising edge = t_{MDIO}

Figure 41 MDIO timing diagram

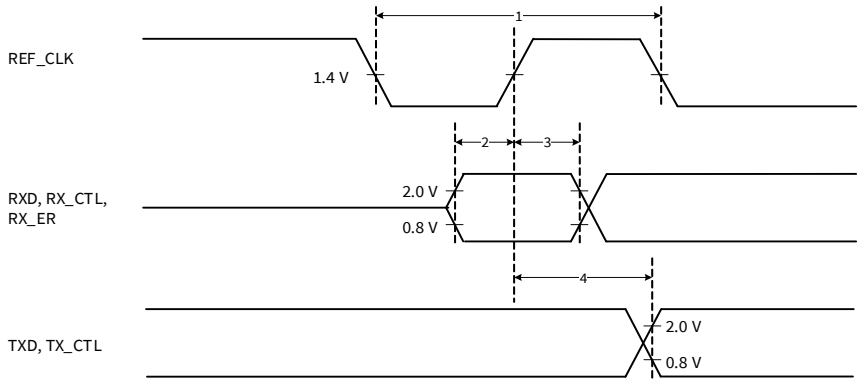

1: RMII reference clock cycle = $1/f_{REF_CLK}$
2: Data setup to REF_CLK rising edge = t_{SU}
3: Data hold from REF_CLK rising edge = t_{HOLD}
4: Data output delay from REF_CLK_rising edge = t_{TXOUT}

Figure 42 RMII timing diagram

26.14.1 Minimum bus frequency requirements

The following table details the required minimum operating frequencies for all possible Ethernet configurations and MAC speeds. Ethernet module uses AHB-Lite interface for DMA access.

Table 60 Minimum AHB frequency for MAC speeds

DMA bus width	MAC rate	Minimum AHB frequency
32	100 Mbps	15 MHz
32	10 Mbps	10 MHz

26.15 SDHC specifications

Table 61 SDHC specifications

Spec ID	Parameter	Description	Min	Typ	Max	Unit	Details/conditions
SDHC and eMMC specifications (the source clock must be divided by 2 or more in DDR modes)							
SID801	V_{SDHC}	SDHC IO supply voltage	2.7	–	3.6	V	For V_{DDIO_1} or V_{DDIO_3}
SID802	I_{ODS}	I/O drive select	8	–	8	mA	drive_sel<1:0>= 0b00 for all modes
SID803	t_{IT}	Input transition time	0.7	–	3	ns	–
SD: DS timing specifications for GPIO_STD/HSIO_STD							
SID810	f_{LP}	Interface clock period	–	–	25	MHz	40-ns period
SID812	C_D	I/O loading at DATA/CMD pins	–	–	40	pF	–
SID813	C_C	I/O loading at CLK pins	–	–	40	pF	–
SID814	t_{OS}	Output setup time of CMD/DAT prior to CLK	5.5	–	–	ns	–
SID815	t_{OH}	Output hold time of CMD/DAT after CLK	5.5	–	–	ns	–
SID816	t_{IS_LP}	Input setup time of CMD/DAT prior to CLK	24	–	–	ns	Clock period - Output delay
SID818	t_{IH}	Input hold time of CMD/DAT after CLK	0	–	–	ns	–
SD: HS timing specifications for GPIO_STD/HSIO_STD							
SID820	$f_{LP_SD_HS}$	Interface clock period	–	–	50	MHz	20-ns period
SID822	$C_{D_SD_HS}$	I/O loading at DATA/CMD pins	–	–	40	pF	–
SID823	$C_{C_SD_HS}$	I/O loading at CLK pins	–	–	40	pF	–
SID824	$t_{OS_SD_HS}$	Output setup time of CMD/DAT prior to CLK	6.5	–	–	ns	–
SID825	$t_{OH_SD_HS}$	Output hold time of CMD/DAT after CLK	2.5	–	–	ns	–
SID826	$t_{IS_LP_SD_HS}$	Input setup time of CMD/DAT prior to CLK	4	–	–	ns	Clock period less output delay
SID828	$t_{IH_SD_HS}$	Input hold time of CMD/DAT after CLK	2.5	–	–	ns	–
eMMC: BWC timing specifications for GPIO_STD/HSIO_STD							
SID870	$f_{LP_eMMC_BWC}$	Interface clock period	–	–	26	MHz	38.4-ns period
SID872	$C_{D_eMMC_BWC}$	I/O loading at DATA/CMD pins	–	–	30	pF	–
SID873	$C_{C_eMMC_BWC}$	I/O loading at CLK pins	–	–	30	pF	–
SID874	$t_{OS_eMMC_BWC}$	Output setup time of CMD/DAT prior to CLK	3.5	–	–	ns	–
SID875	$t_{OH_eMMC_BWC}$	Output hold time of CMD/DAT after CLK	3.5	–	–	ns	–
SID876	$t_{IS_LP_eMMC_BWC}$	Input setup time of CMD/DAT prior to CLK	9.7	–	–	ns	Clock period less output delay
SID878	$t_{IH_eMMC_BWC}$	Input hold time of CMD/DAT after CLK	8.3	–	–	ns	–
eMMC: SDR timing specifications for HSIO_STD							
SID880	$f_{LP_eMMC_SDR}$	Interface clock period	–	–	52	MHz	19.2 ns period
SID882	$C_{D_eMMC_SDR}$	I/O loading at DATA/CMD pins	–	–	30	pF	–
SID883	$C_{C_eMMC_SDR}$	I/O loading at CLK pins	–	–	30	pF	–
SID884	$t_{OS_eMMC_SDR}$	Output setup time of CMD/DAT prior to CLK	3.5	–	–	ns	–

Table 61 SDHC specifications *(continued)*

Spec ID	Parameter	Description	Min	Typ	Max	Unit	Details/conditions
SID885	$t_{OH_eMMC_SDR}$	Output hold time of CMD/DAT after CLK	3.5	–	–	ns	–
SID886	$t_{IS_LP_eMMC_SDR}$	Input setup time of CMD/DAT prior to CLK	3.5	–	–	ns	Clock period less output delay
SID888	$t_{IH_eMMC_SDR}$	Input hold time of CMD/DAT after CLK	2.5	–	–	ns	–
eMMC: DDR timing specifications for HSIO_STD							
SID890	$f_{LP_eMMC_DDR}$	Interface clock period	–	–	52	MHz	19.2 ns period
SID892	$DUTY_CLK_{_eMMC_DDR}$	Duty cycle of output CLK	45	–	55	%	–
SID893	$C_{D_eMMC_DDR}$	I/O loading at DATA/CMD pins	–	–	20	pF	–
SID894	$C_{C_eMMC_DDR}$	I/O loading at CLK pins	–	–	20	pF	–
SID895	$t_{OS_eMMC_DDR}$	Output setup time of CMD/DAT prior to CLK	2.6	–	–	ns	–
SID896	$t_{OH_eMMC_DDR}$	Output hold time of CMD/DAT after CLK	2.6	–	–	ns	–
SID897	$t_{IS_LP_eMMC_DDR}$	Input setup time of CMD/DAT prior to CLK	2.4	–	–	ns	Clock period less output delay
SID899	$t_{IH_eMMC_DDR}$	Input hold time of CMD/DAT after CLK	1.5	–	–	ns	–

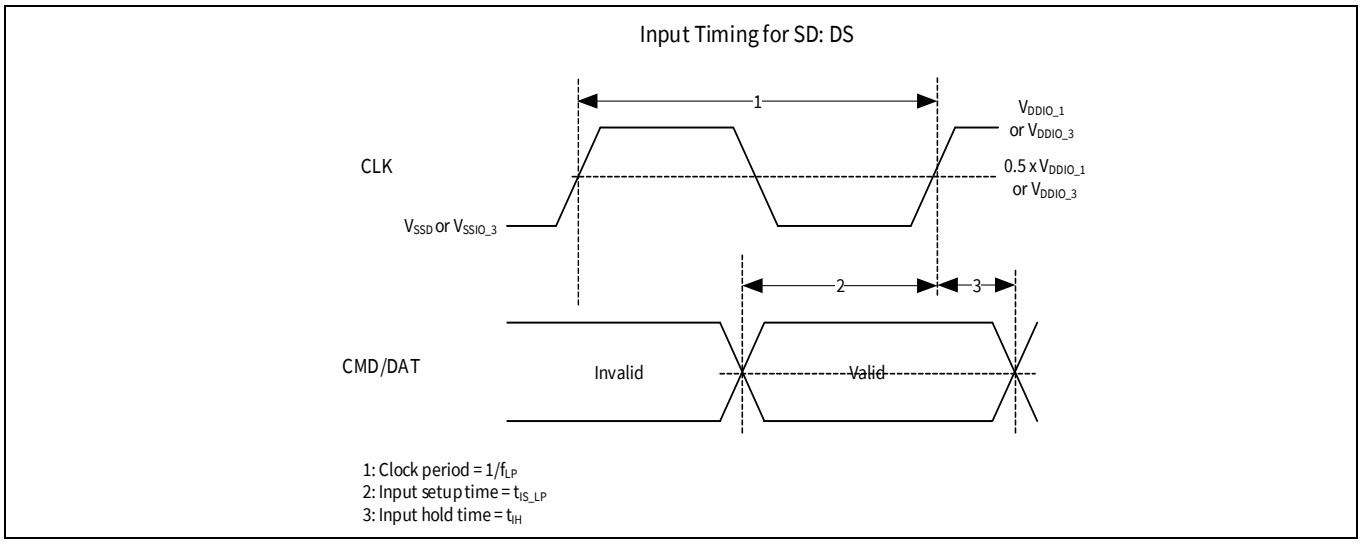

Figure 43 SD default speed input timing

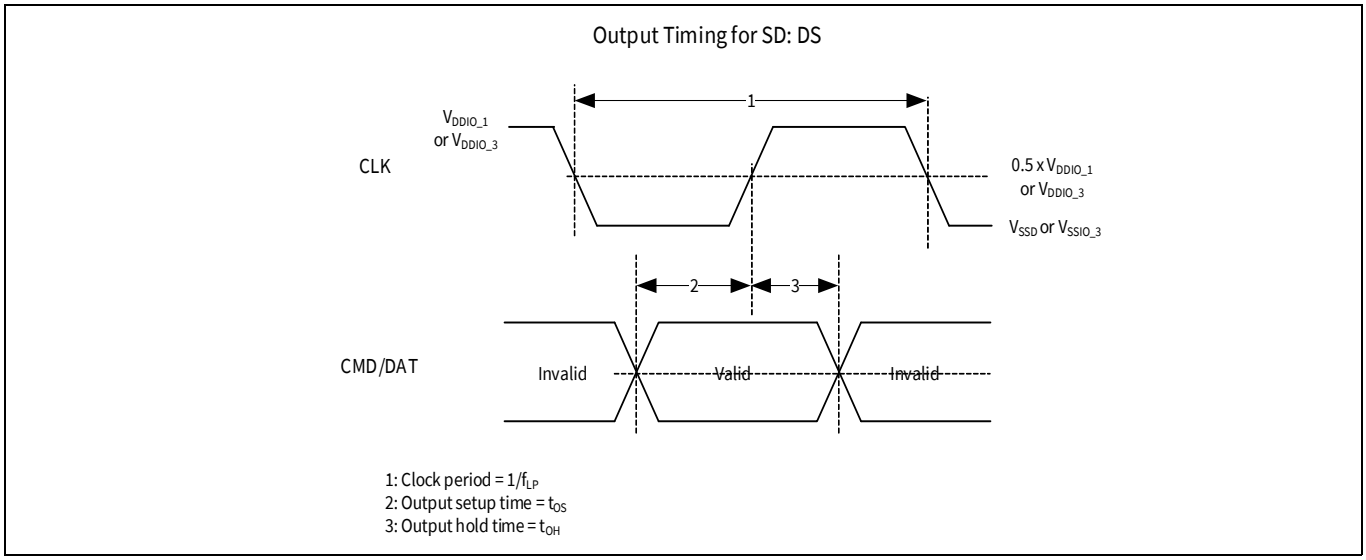

Figure 44 SD default speed output timing

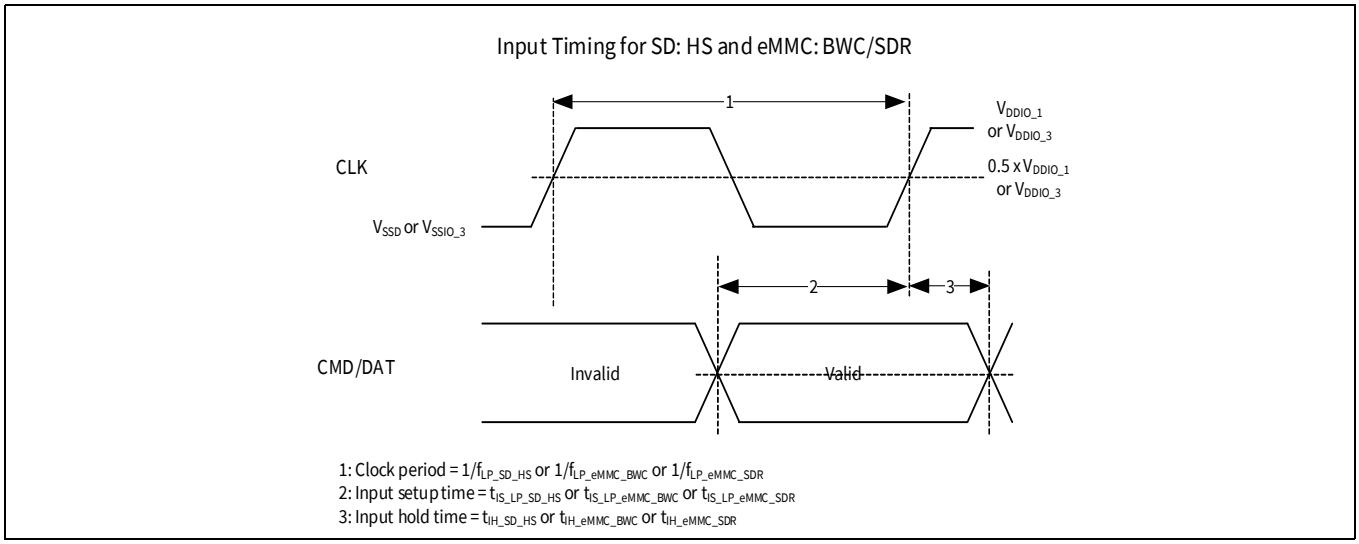

Figure 45 SD high-speed and eMMC BWC/SDR input timing

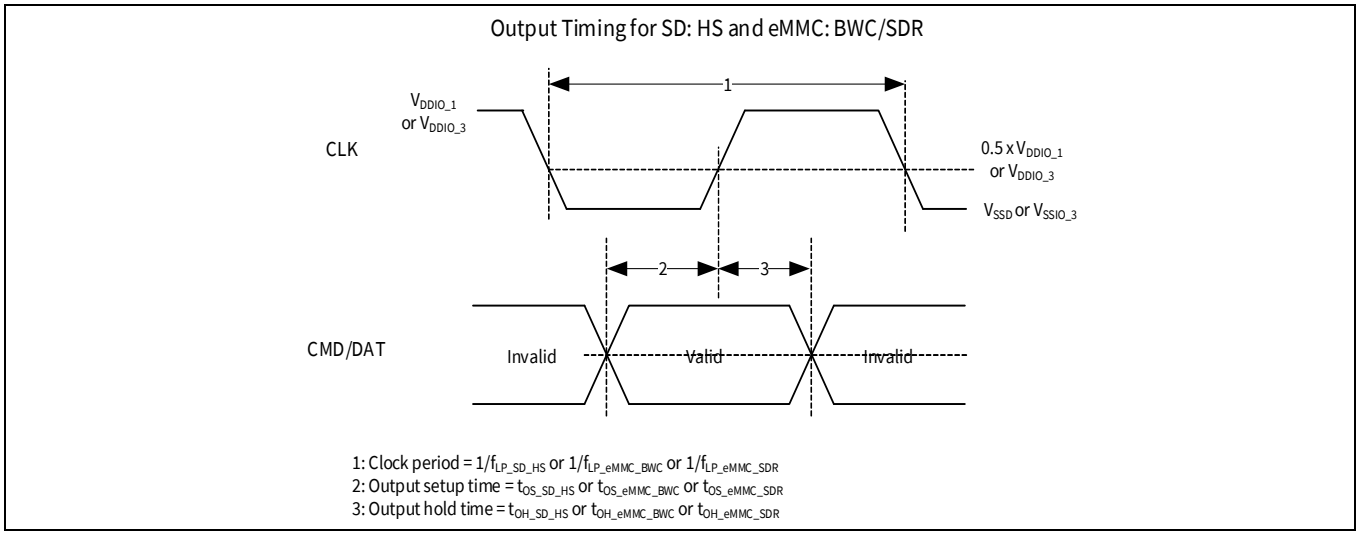

Figure 46 SD high-speed and eMMC BWC/SDR output timing

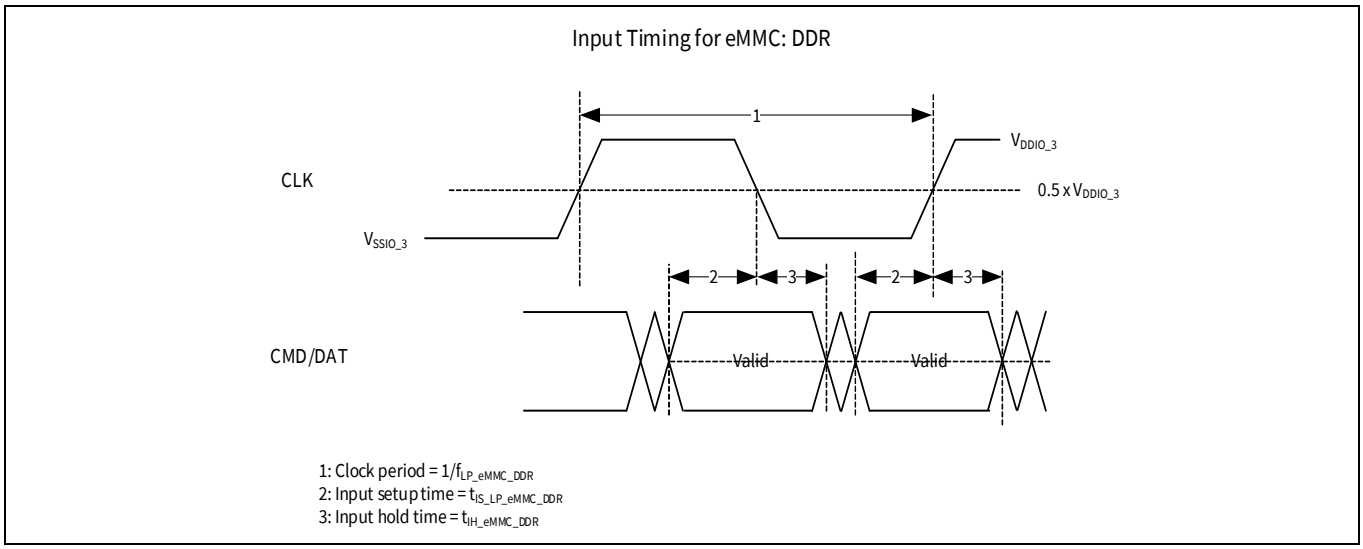

Figure 47 eMMC DDR input timing

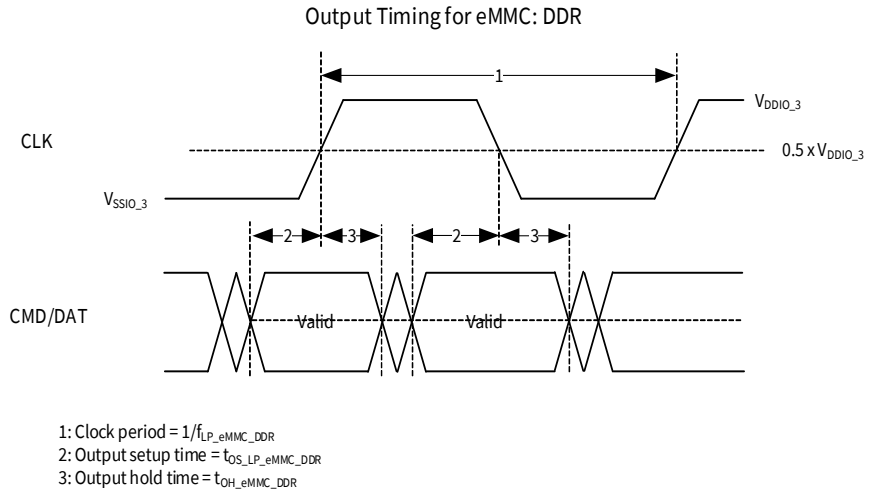

Figure 48 eMMC DDR output timing

26.16 Audio subsystem specifications

Table 62 Audio subsystem specifications

Spec ID	Parameter	Description	Min	Typ	Max	Unit	Details/conditions
SID770	f_{AUDIO}	Audio subsystem frequency	–	–	200	MHz	Guaranteed by design
SID772	V_{AUDIO}	Audio subsystem I/O supply voltage	3.0	–	3.6	V	For V_{DDIO_2}
SID773	V_{OL_A}	Output voltage LOW level	–	–	0.4	V	drive_sel<1:0>= 0b0X, Pull-up, pull-down: off
SID774	V_{OH_A}	Output voltage HIGH level	V_{DDIO_2} – 0.5	–	–	V	drive_sel<1:0>= 0b0X, Pull-up, pull-down: off
SID775	$V_{IH_CMOS_A}$	Input voltage HIGH threshold in CMOS mode	0.7 × V_{DDIO_2}	–	–	V	–
SID776	$V_{IL_CMOS_A}$	Input Voltage LOW threshold in CMOS mode	–	–	0.3 × V_{DDIO_2}	V	–
I²S/TDM word clock frequency							
SID796	f_{WS_I2S}	WS Clock Rate in I²S mode	8	–	192	kHz	Guaranteed by design
SID797	f_{WS_TDM}	WS Clock Rate in TDM mode	–	–	96	kHz	Guaranteed by design
SID798	Word	Length of I²S Word	8	–	32	bit	Guaranteed by design
I²S/TDM Master mode							
SID740	t_{D_WS}	Delay Time of TX/RX_WS Output Transition from Falling Edge of TX/RX_SCK Output	–8	–	9	ns	Except TDM 96 kHz mode, TX/RX_WS output and TX/RX_SCK output with drive_sel<1:0> = 0b 01,guaranteed by design
SID740A	$t_{D_WS_TDM96A}$	Delay Time of TX/RX_WS output Transition from Falling Edge of TX/RX_SCK output	–8	–	11	ns	TDM 96 kHz mode, TX/RX_WS output with drive_sel<1:0> = 0b01 and TX/RX_SCK output with drive_sel<1:0> = 0b00, guaranteed by design
SID741	t_{D_SDO}	Delay Time of TX_SDO Transition from Falling Edge of TX_SCK Output	–8	–	8	ns	TX_SDO and TX_SCK output with drive_sel<1:0> = 0b01 for except TDM 96 kHz mode, guaranteed by design
SID741A	$t_{D_SDO_TDM96}$	Delay Time of TX_SDO Transition from Falling Edge of TX_SCK Output	–8	–	8	ns	TX_SDO with drive_sel<1:0> = 0b01 and TX_SCK output with drive_sel<1:0> = 0b00 for TDM 96 kHz mode, guaranteed by design
SID742	t_{S_SDI}	RX_SDI Setup Time to the Following Rising Edge of RX_SCK Output (RX_CTL.B_CLOCK_INV = 0)	11	–	–	ns	RX_SCK output with drive_sel<1:0> = 0b00, guaranteed by design
SID743	t_{H_SDI}	RX_SDI Hold Time to the Rising Edge of RX_SCK Output (RX_CTL.B_CLOCK_INV = 0)	t_{MCLK_SOC} – 0.9	–	–	ns	RX_SCK output with drive_sel<1:0> = 0b00, guaranteed by design
SID744	t_{S_SDI1}	RX_SDI Setup Time to the Following Falling Edge of RX_SCK Output (RX_CTL.B_CLOCK_INV = 1)	11	–	–	ns	RX_SCK output with drive_sel<1:0> = 0b00, guaranteed by design
SID745	t_{H_SDI1}	RX_SDI Hold Time to the Falling Edge of RX_SCK Output (RX_CTL.B_CLOCK_INV = 1)	t_{MCLK_SOC} – 0.9	–	–	ns	RX_SCK output with drive_sel<1:0> = 0b00, guaranteed by design

Table 62 Audio subsystem specifications *(continued)*

Spec ID	Parameter	Description	Min	Typ	Max	Unit	Details/conditions
SID746	t_{SCKCY}	TX/RX_SCK output Bit Clock Duty Cycle	45	–	55	%	Guaranteed by design
SID748	f_{MCLK_SOC}	MCLK input clock frequency	1.024	–	196.608	MHz	Internal Fractional PLL, guaranteed by design
SID748A	$f_{MCLK_SOC_E}$	MCLK input clock frequency	1.024	–	98.304	MHz	External clock
SID749	t_{MCLK_SOC}	MCLK input clock period	5.086	–	976.563	ns	Guaranteed by design
SID750	t_{JITTER}	MCLK Input clock jitter tolerance	–200	–	200	ps	Guaranteed by design
SID748B	f_{MCLK}	MCLK output clock frequency	1.024	–	25	MHz	MCLK output with drive_sel<1:0> = 0b00 Guaranteed by design
SID748C	f_{MCLK1}	MCLK output clock frequency	1.024	–	15	MHz	MCLK output with drive_sel<1:0> = 0b01 Guaranteed by design
SID749B	f_{MCLK_DT}	MCLK output clock duty	45	–	55	%	Guaranteed by design
I²S/TDM Slave mode							
SID751	t_{S_WS}	TX/RX_WS Input Alignment Clock Setup Time to the following Rising Edge of TX/RX_SCK Input	5	–	–	ns	Guaranteed by design
SID752	t_{H_WS}	TX/RX_WS Input Alignment Clock Hold Time to the Rising Edge of TX/RX_SCK Input	t_{MCLK_SOC} + 5.0	–	–	ns	Guaranteed by design
SID753	t_{D_SDO}	Delay Time of TX_SDO Transition from Falling Edge of TX_SCK Input (TX_CTL.B_CLOCK_INV = 0)	– t_{MCLK_SOC} + 5.0	–	t_{MCLK_SOC} + 15	ns	TX_SDO with drive_sel<1:0>= 0b00, guaranteed by design
SID754	t_{D_SDO1}	Delay Time of TX_SDO Transition from Rising Edge of TX_SCK Input (TX_CTL.B_CLOCK_INV = 1)	– t_{MCLK_SOC} + 5.0	–	t_{MCLK_SOC} + 15	ns	TX_SDO with drive_sel<1:0>= 0b00, guaranteed by design
SID755	t_{S_SDI}	RX_SDI Setup Time to the Following Rising Edge of RX_SCK Input	5	–	–	ns	Guaranteed by design
SID756	t_{H_SDI}	RX_SDI Hold Time to the Rising Edge of RX_SCK Input	t_{MCLK_SOC} + 5.0	–	–	ns	Guaranteed by design
SID757	t_{SCKCY}	TX/RX_SCK Input Bit Clock Duty Cycle	45	–	55	%	Guaranteed by design

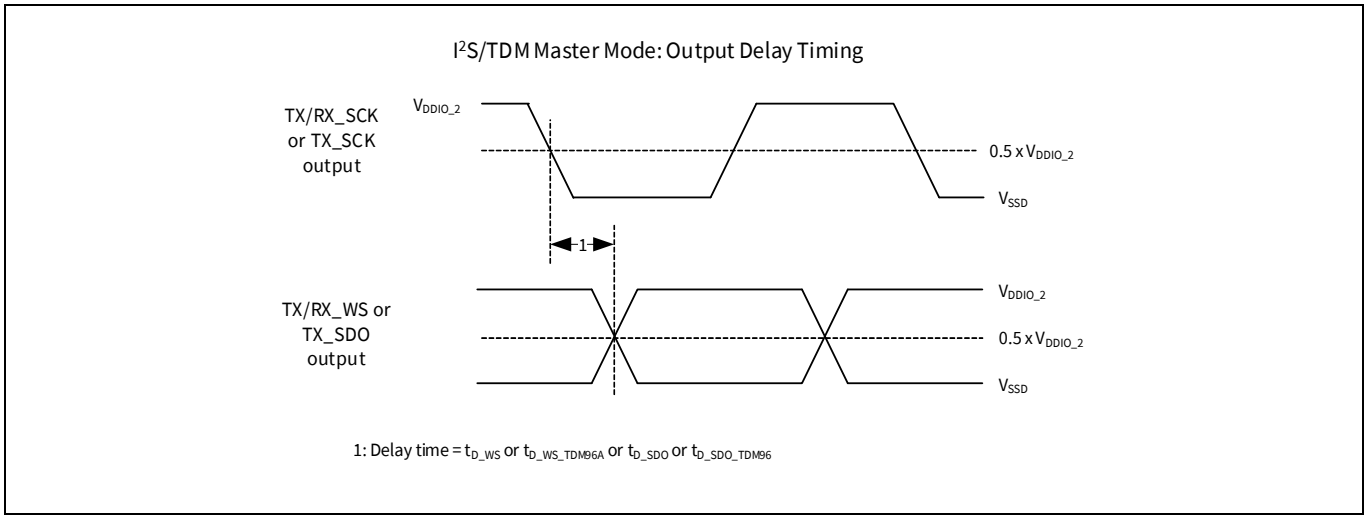

Figure 49 Master output delay

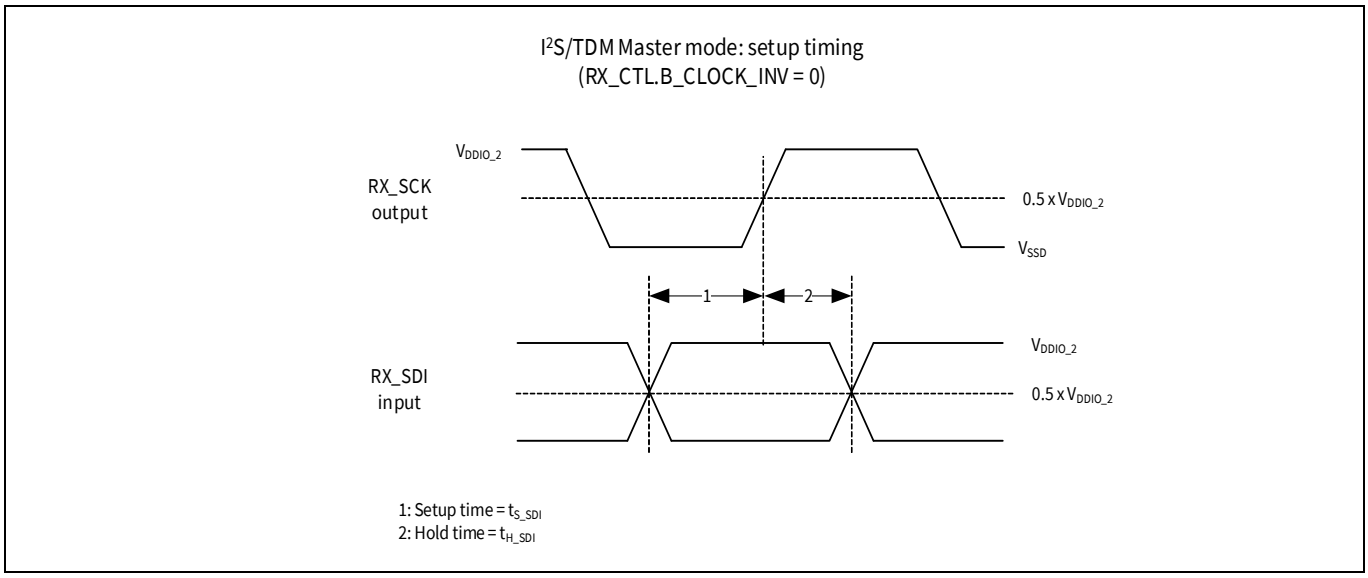

Figure 50 Master setup without clock inversion

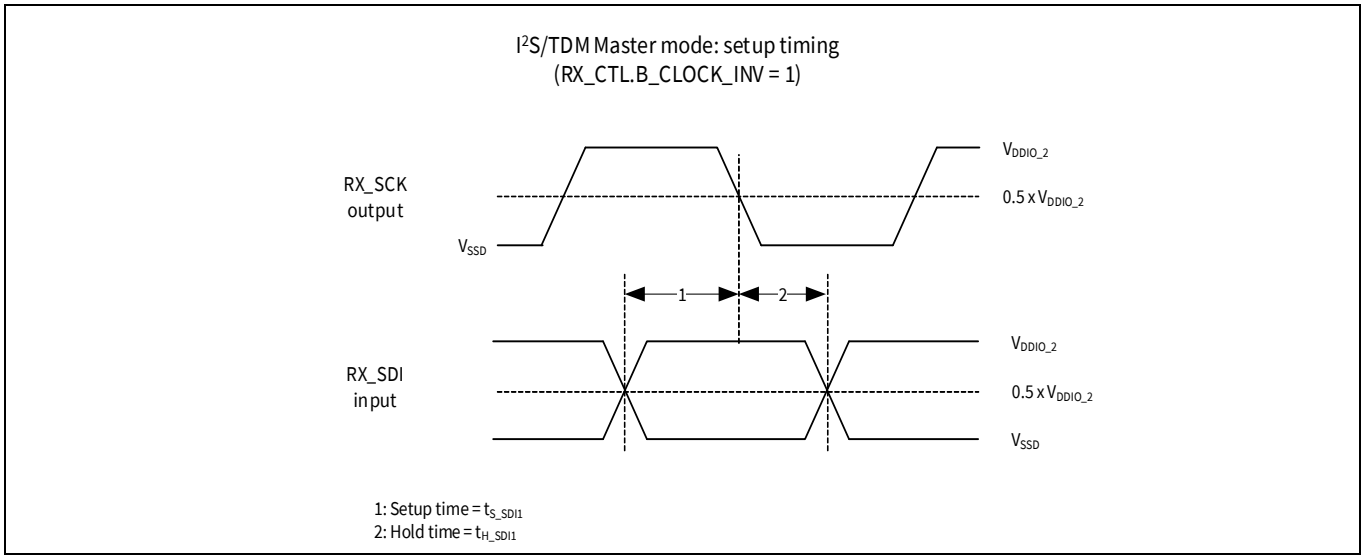

Figure 51 **Master setup with clock inversion**

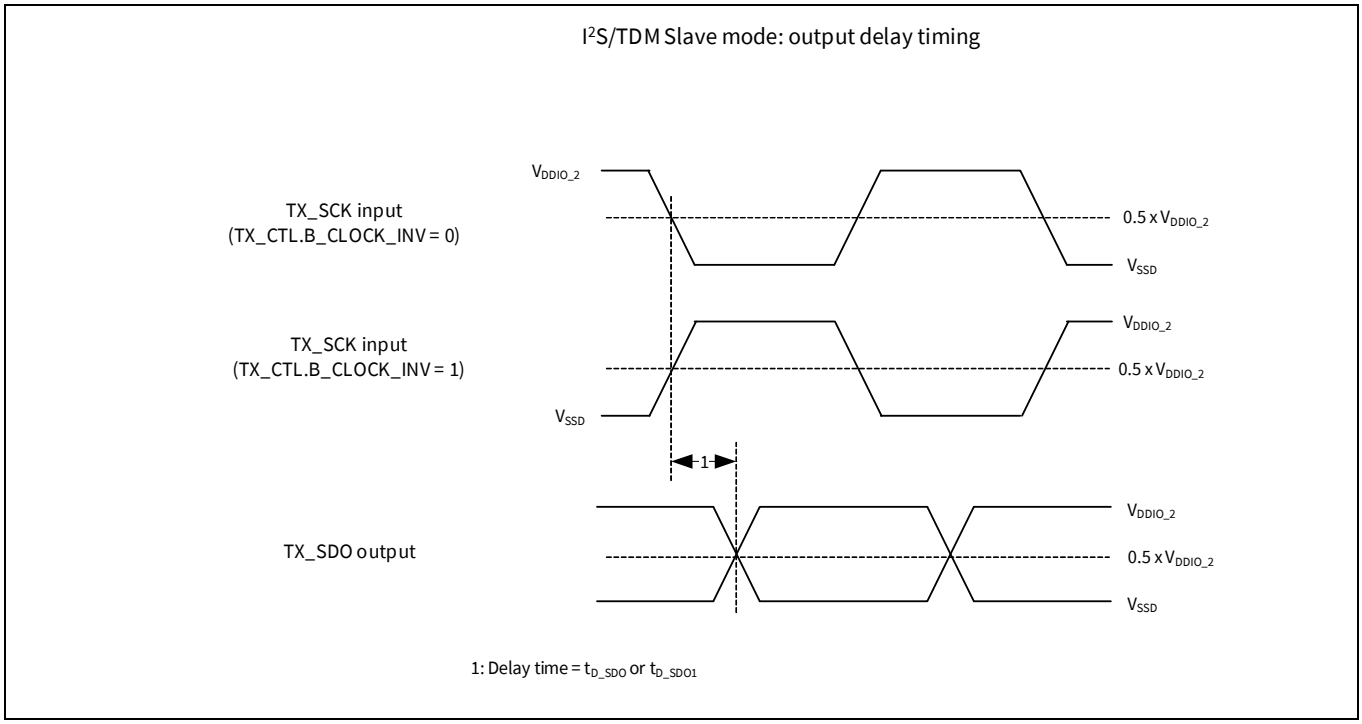

Figure 52 **Slave output delay**

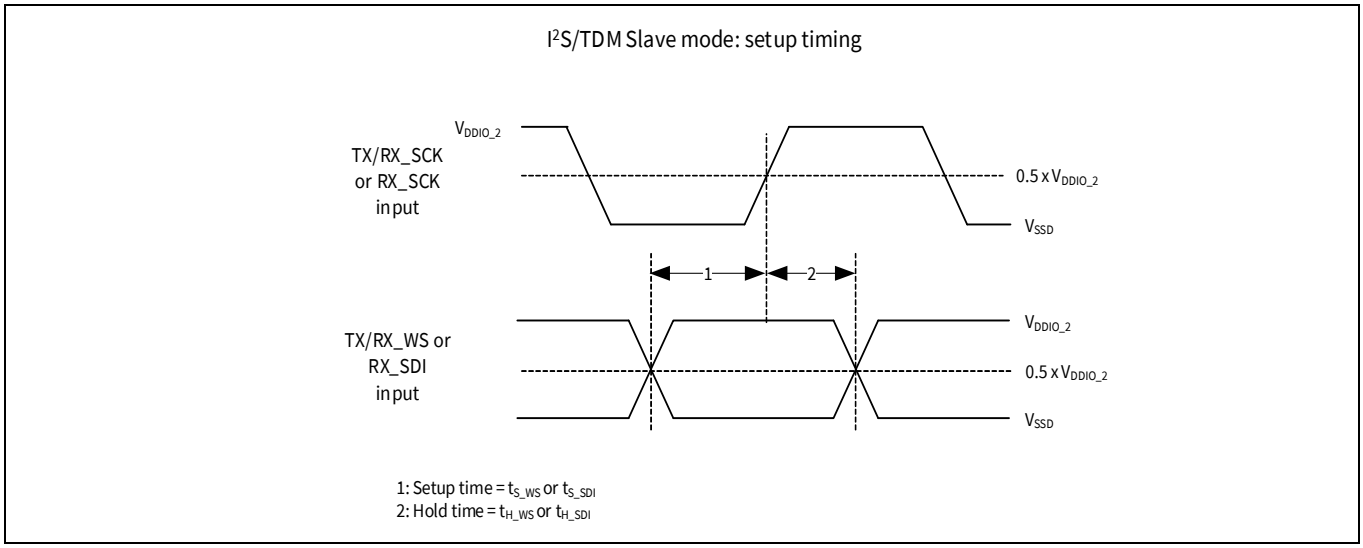

Figure 53 Slave setup

26.17 Serial memory interface specifications

Table 63 SMIF specifications [Conditions: drive_sel<1:0>= 00]

Spec ID	Parameter	Description	Min	Typ	Max	Unit	Details/conditions
SMIF DC specification							
SID785	V_{SMIF}	SMIF I/O supply voltage	2.7	–	3.6	V	For V_{DDIO_1} or V_{DDIO_3}
SMIF HSSPI(SDR) specification for HSIO_STD							
SID760	$C_{L_SDR_HSIO}$	Load capacitance	–	–	30	pF	–
SID761	$SR_{_SDR_HSIO}$	Input rise and fall slew rates	1.5	–	–	V/ns	Guaranteed by design
SID762	$f_{CK_SDR_HSIO}$	Clock frequency	-	–	100	MHz	–
SID763	$t_{CK_SDR_HSIO}$	Clock period	$1 / f_{CK_SDR_HSIO}$	–	–	ns	–
SID764	$DCK_{_SDR_HSIO}$	Clock duty	45	–	55	%	–
SID765	$CSR_{_SDR_HSIO}$	Clock rise and fall slew rates	1.5	–	–	V/ns	–
SID766	$t_{CS_SDR_HSIO}$	Chip select HIGH time	10	–	–	ns	–
SID767	$t_{CSS_SDR_HSIO}$	Chip select active setup time	3	–	–	ns	–
SID768	$t_{CSH_SDR_HSIO}$	Chip select active hold time	5	–	–	ns	–
SID769	$t_{SU_SDR_HSIO}$	Data setup time (fCK = 100 MHz)	1.5	–	–	ns	For other frequencies: tSU = tSU_min + 0.225 × (tCK - tCK_min) tSU_min = value at min of SID769B tCK_min = value at min of SID763B tCK = actual clock period
SID780	$t_{HD_SDR_HSIO}$	Data hold time (fCK = 100 MHz)	2	–	–	ns	For other frequencies: tHD = tHD_min + 0.45 × (tCK - tCK_min) tHD_min = value at min of SID780 tCK_min = value at min of SID763 tCK = actual clock period
SID781	$t_{V_SDR_HSIO}$	Clock LOW to input data valid	1.5	–	7.65	ns	–
SID782	$t_{HO_SDR_HSIO}$	Input hold time	2	–	–	ns	–
SID783	$t_{DIS_SDR_HSIO}$	Input disable time	0	–	7.5	ns	–
SID784	$t_{IO_SKEW_SDR_HSIO}$	Data skew (first data bit to last data bit)	–	–	0.6	ns	Guaranteed by design
SMIF HSSPI(SDR) specification for GPIO_STD							
SID760A	$C_{L_SDR_GPIO}$	Load capacitance	–	–	30	pF	–
SID761A	$SR_{_SDR_GPIO}$	Input rise and fall slew rates	1	–	–	V/ns	Guaranteed by design
SID762A	$f_{CK_SDR_GPIO}$	Clock frequency	–	–	32	MHz	–
SID763A	$t_{CK_SDR_GPIO}$	Clock period	$1 / f_{CK_SDR_GPIO}$	–	–	ns	–
SID764A	$DCK_{_SDR_GPIO}$	Clock duty	45	–	55	%	–
SID765A	$CSR_{_SDR_GPIO}$	Clock rise and fall slew rates	1	–	–	V/ns	–
SID766A	$t_{CS_SDR_GPIO}$	Chip select HIGH time	30	–	–	ns	–
SID767A	$t_{CSS_SDR_GPIO}$	Chip select active setup time	9	–	–	ns	–
SID768A	$t_{CSH_SDR_GPIO}$	Chip select active hold time	15	–	–	ns	–
SID769A	$t_{SU_SDR_GPIO}$	Data setup time	4.5	–	–	ns	–
SID780A	$t_{HD_SDR_GPIO}$	Data hold time	6	–	–	ns	–

Table 63 SMIF specifications [Conditions: drive_sel<1:0>= 00] *(continued)*

Spec ID	Parameter	Description	Min	Typ	Max	Unit	Details/conditions
SID781A	$t_{V_SDR_GPIO}$	Clock LOW to input data valid	4.5	–	9	ns	–
SID782A	$t_{HO_SDR_GPIO}$	Input hold time	2	–	–	ns	–
SID783A	$t_{DIS_SDR_GPIO}$	Input disable time	0	–	22.5	ns	–
SID784A	$t_{IO_SKEW_SDR_GPIO}$	Data skew (first data bit to last data bit)	–	–	1.8	ns	Guaranteed by design
SMIF HSSPI(DDR) specification for HSIO_STD							
SID760B	$C_{L_DDR_HSIO}$	Load capacitance	–	–	15	pF	–
SID761B	$SR_{_DDR_HSIO}$	Input rise and fall slew rates	1.5	–	-	V/ns	Guaranteed by design
SID762B2	$f_{CK_DDR_HSIO}$	Clock frequency	-	–	90	MHz	–
SID763B	$t_{CK_DDR_HSIO}$	Clock period	$1 / f_{CK_DDR_HSIO}$	–	–	ns	–
SID764B	$DCK_{_DDR_HSIO}$	Clock duty	45	–	55	%	–
SID765B	$CSR_{_DDR_HSIO}$	Clock rise and fall slew rates	1.5	–	–	V/ns	–
SID766B	$t_{CS_DDR_HSIO}$	Chip select HIGH time	10	–	–	ns	–
SID767B	$t_{CSS_DDR_HSIO}$	Chip select active setup time	4	–	–	ns	–
SID768B	$t_{CSH_DDR_HSIO}$	Chip select active hold time	4	–	–	ns	–
SID769B	$t_{SU_DDR_HSIO}$	Data setup time (fCK = 90 MHz)	2	–	–	ns	For other frequencies: tSU = tSU_min + 0.225 × (tCK - tCK_min) tSU_min = value at min of SID769B tCK_min = value at min of SID763B tCK = actual clock period
SID780B	$t_{HD_DDR_HSIO}$	Data hold time (fCK = 90 MHz)	1.2	–	–	ns	For other frequencies: tHD = tHD_min + 0.225 × (tCK - tCK_min) tHD_min = value at min of SID780B tCK_min = value at min of SID763B tCK = actual clock period
SID781B	$t_{V_DDR_HSIO}$	Clock LOW to input data valid	0	–	6.5	ns	–
SID782B	$t_{HO_DDR_HSIO}$	Input hold time	1	–	–	ns	–
SID783B	$t_{DIS_DDR_HSIO}$	Input disable time	–	–	7.5	ns	–
SID784B	$t_{IO_SKEW_DDR_HSIO}$	Data skew (first data bit to last data bit)	–	–	0.6	ns	Guaranteed by design
SMIF HSSPI(DDR) specification for GPIO_STD							
SID760C	$C_{L_DDR_GPIO}$	Load capacitance	–	–	15	pF	–
SID761C	$SR_{_DDR_GPIO}$	Input rise and fall slew rates	1	–	–	V/ns	Guaranteed by design
SID762C	$f_{CK_DDR_GPIO}$	Clock frequency	–	–	32	MHz	–
SID763C	$t_{CK_DDR_GPIO}$	Clock period	$1 / f_{CK_DDR_GPIO}$	–	-	ns	–
SID764C	$DCK_{_DDR_GPIO}$	Clock duty	45	–	55	%	–
SID765C	$CSR_{_DDR_GPIO}$	Clock rise and fall slew rates	1	–	–	V/ns	–
SID766C	$t_{CS_DDR_GPIO}$	Chip select HIGH time	30	–	–	ns	–
SID767C	$t_{CSS_DDR_GPIO}$	Chip select active setup time	5	–	–	ns	–
SID768C	$t_{CSH_DDR_GPIO}$	Chip select active hold time	4	–	–	ns	–

Table 63 SMIF specifications [Conditions: drive_sel<1:0>= 00] *(continued)*

Spec ID	Parameter	Description	Min	Typ	Max	Unit	Details/conditions
SID769C	$t_{SU_DDR_GPIO}$	Data setup time	5	–	–	ns	–
SID780C	$t_{HD_DDR_GPIO}$	Data hold time	4.5	–	–	ns	–
SID781C	$t_{V_DDR_GPIO}$	Clock LOW to input data valid	0	–	9	ns	–
SID782C	$t_{HO_DDR_GPIO}$	Input hold time	3	–	–	ns	–
SID783C	$t_{DIS_DDR_GPIO}$	Input disable time	–	–	22.5	ns	–
SID784C	$t_{IO_SKEW_DDR_GPIO}$	Data skew (first data bit to last data bit)	–	–	1.8	ns	Guaranteed by design
SMIF HYPERBUS™ specification for HSIO_STD							
SID785	$C_{L_HB_HSIO}$	Load capacitance	–	–	20	pF	–
SID786	$SRI_{_HB_HSIO}$	Input rise and fall slew rates	1	–	–	V/ns	For all signals, Guaranteed by design
SID787	$SRO_{_HB_HSIO}$	Output rise and fall slew rates	1	–	–	V/ns	For all signals
Clock characteristics							
SID700	$f_{CK_HB_HSIO}$	Clock frequency	–	–	100	MHz	–
SID701	$t_{CK_HB_HSIO}$	Clock period	$1 / f_{CK_HB_HSIO}$	–	–	ns	–
SID702	$DCK_{_HB_HSIO}$	Clock duty	45	–	55	%	–
AC parameters							
SID706	$t_{CSHI_HB_HSIO}$	Chip select HIGH between transactions	10	–	–	ns	Guaranteed by design
SID708	$t_{CSS_HB_HSIO}$	Chip select setup to next CK rising edge	3	–	–	ns	–
SID709	$t_{DSV_HB_HSIO}$	Data strobe valid	–	–	12	ns	–
SID710	$t_{OSU_HB_HSIO}$	DQ output setup	1	–	–	ns	–
SID711	$t_{OH_HB_HSIO}$	DQ output hold	1	–	–	ns	–
SID715	$t_{CKD_HB_HSIO}$	CK transition to DQ valid	1	–	5.5	ns	–
SID718	$t_{CKDS_HB_HSIO}$	CK transition to RWDS valid	1	–	5.5	ns	–
SID719	$t_{DSS_HB_HSIO}$	RWDS transition to input DQ valid	–0.8	–	0.8	ns	–
SID720	$t_{DSH_HB_HSIO}$	Input DQ invalid to RWDS transition	–0.8	–	0.8	ns	–
SID721	$t_{CSH_HB_HSIO}$	Chip select hold after CK falling edge	0	–	-	ns	–
SMIF HYPERBUS™ specification for GPIO_STD							
SID785A	$C_{L_HB_GPIO}$	Load capacitance	–	–	20	pF	–
SID786A	$SRI_{_HB_GPIO}$	Input rise and fall slew rates	0.45	–	–	V/ns	For all signals, guaranteed by design
SID787A	$SRO_{_HB_GPIO}$	Output rise and fall slew rates	0.45	–	–	V/ns	For all signals
Clock characteristics							
SID700A	$f_{CK_HB_GPIO}$	Clock frequency	-	–	32	MHz	–
SID701A	$t_{CK_HB_GPIO}$	Clock period	$1 / f_{CK_HB_GPIO}$	–	–	ns	–
SID702A	$DCK_{_HB_GPIO}$	Clock duty	45	–	55	%	–
AC parameters							
SID706A	$t_{CSHI_HB_GPIO}$	Chip select HIGH between transactions	30	–	–	ns	Guaranteed by design
SID708A	$t_{CSS_HB_GPIO}$	Chip select setup to next CK rising edge	9	–	–	ns	–

Table 63 SMIF specifications [Conditions: drive_sel<1:0>= 00] *(continued)*

Spec ID	Parameter	Description	Min	Typ	Max	Unit	Details/conditions
SID709A	$t_{DSV_HB_GPIO}$	Data strobe valid	–	–	36	ns	Guaranteed by design
SID710A	$t_{OSU_HB_GPIO}$	DQ output setup	3	–	–	ns	–
SID711A	$t_{OH_HB_GPIO}$	DQ output hold	3	–	–	ns	–
SID715A	$t_{CKD_HB_GPIO}$	CK transition to DQ valid	3	–	16.5	ns	–
SID718A	$t_{CKDS_HB_GPIO}$	CK transition to RWDS valid	3	–	16.5	ns	–
SID719A	$t_{DSS_HB_GPIO}$	RWDS transition to DQ valid	–2.4	–	2.4	ns	–
SID720A	$t_{DSH_HB_GPIO}$	Input DQ invalid to RWDS transition	–2.4	–	2.4	ns	–
SID721A	$t_{CSH_HB_GPIO}$	Chip select hold after CK falling edge	0	–	–	ns	–

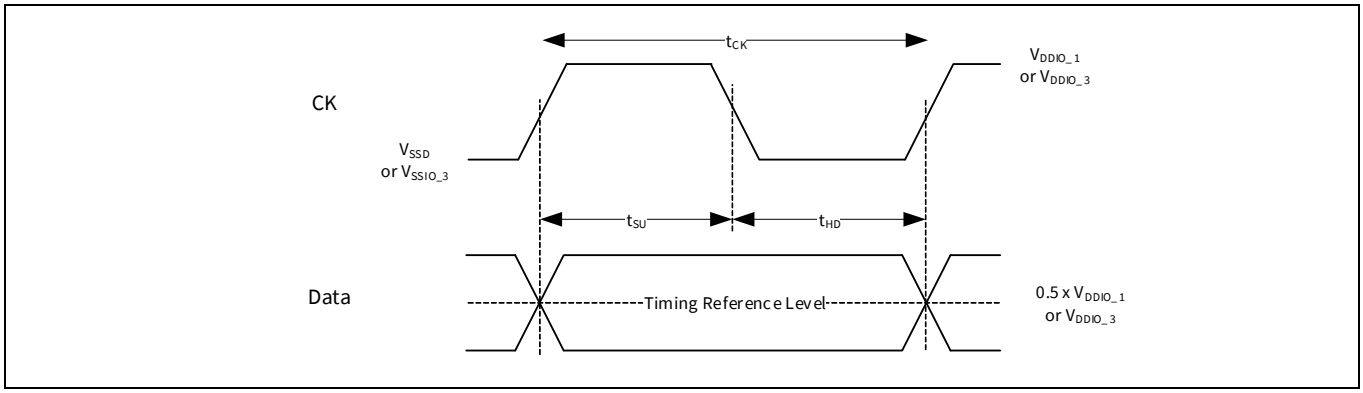

Figure 54 SDR Write timing reference level

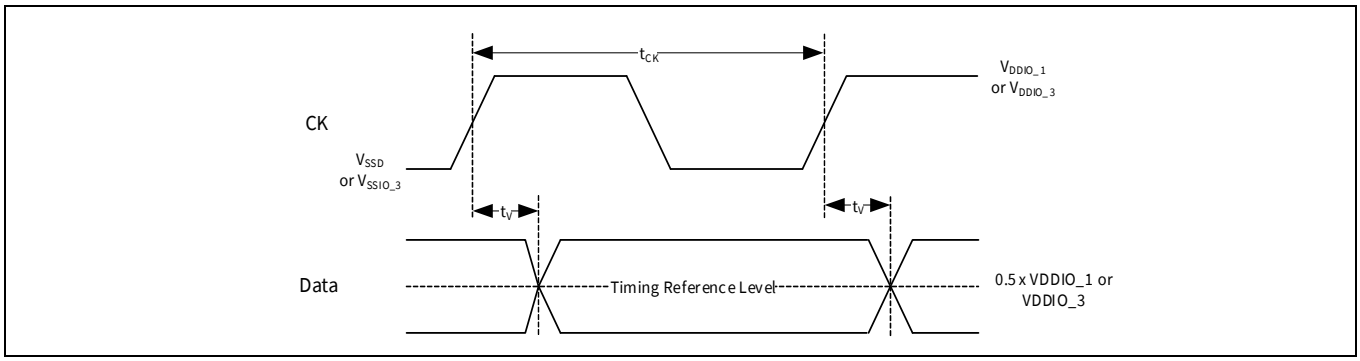

Figure 55 SDR Read timing reference level

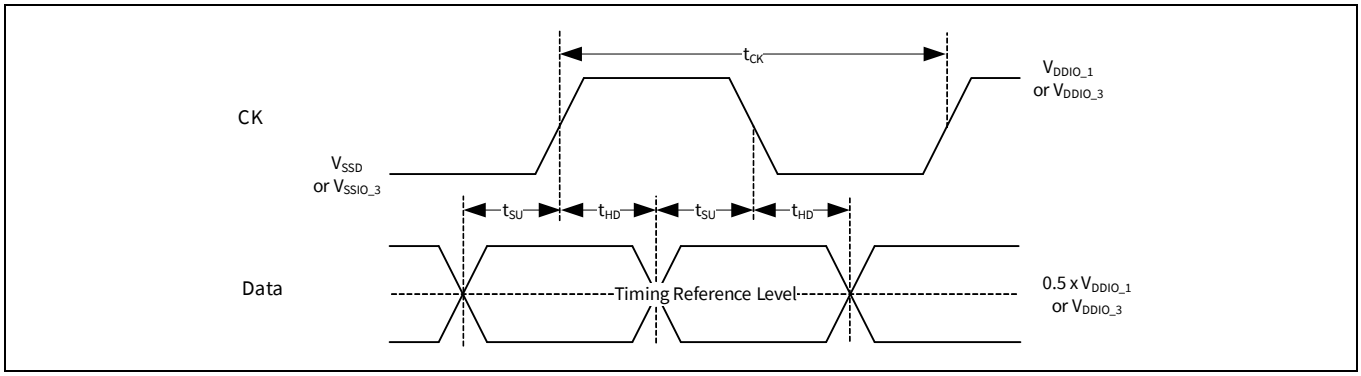

Figure 56 DDR Write timing reference level

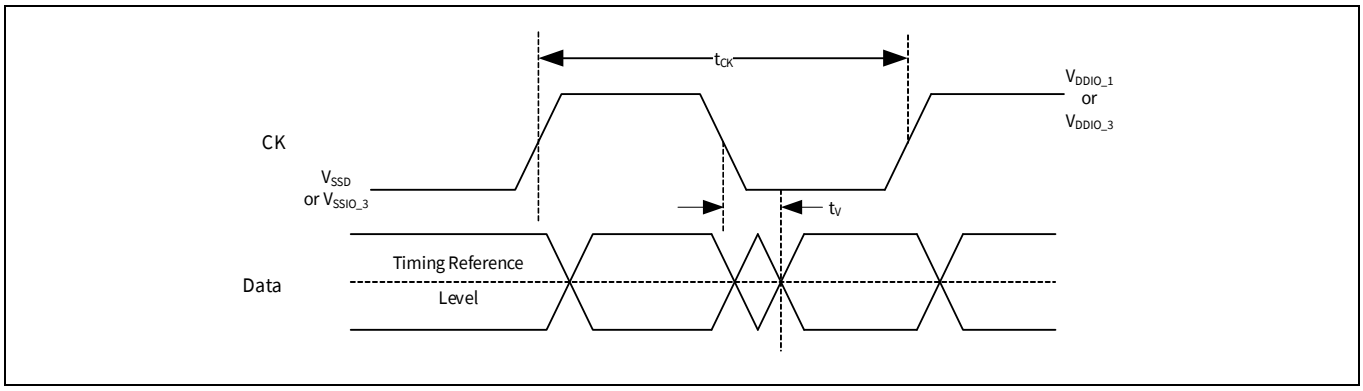

Figure 57 DDR Read timing reference level

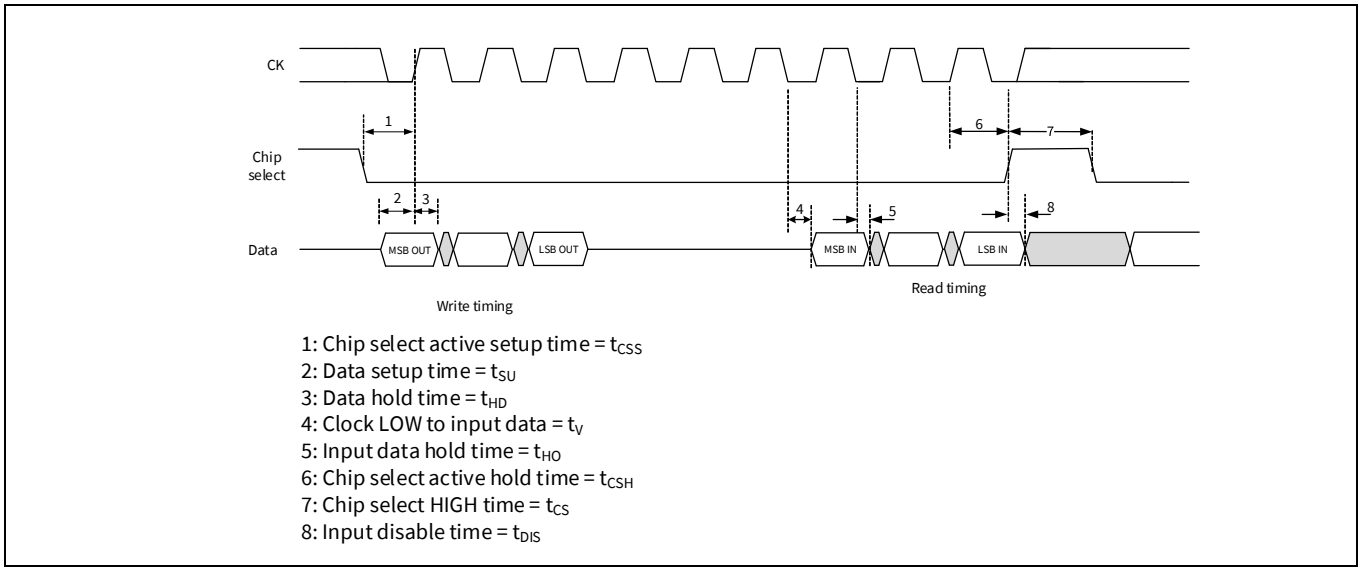

Figure 58 SDR write and read timing diagram

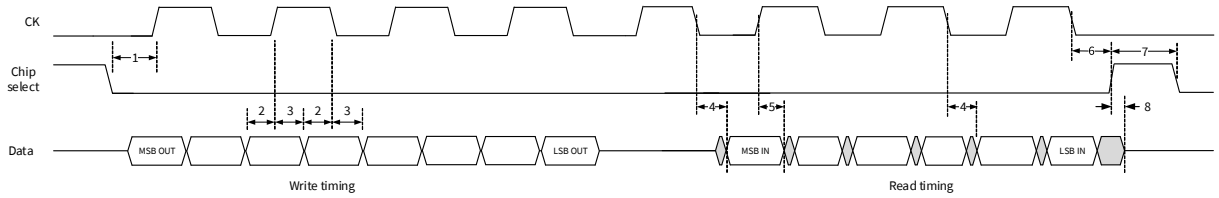

1: Chip select active setup time = t_{CSS}
2: Data setup time = t_{SU}
3: Data hold time = t_{HD}
4: Clock LOW to input data = t_V
5: Input data hold time = t_{HO}
6: Chip select active hold time = t_{CSH}
7: Chip select HIGH time = t_{CS}
8: Input disable time = t_{DIS}

Figure 59 DDR write and read timing diagram

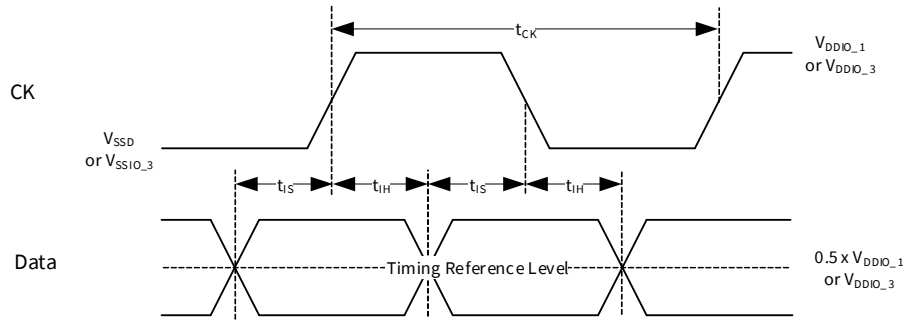

Figure 60 HYPERBUS™ timing reference level

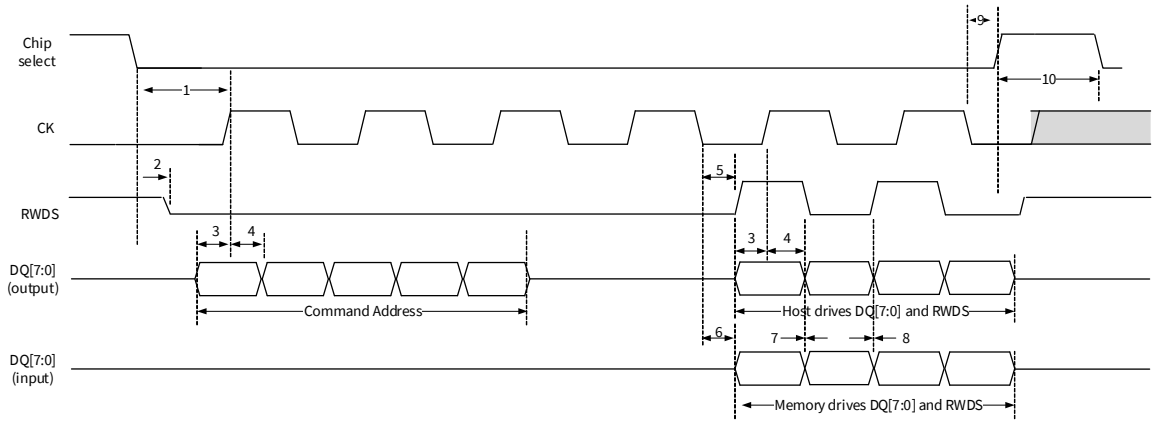

1: Chip select setup to next CK rising edge = t_{CSS}
2: Data strobe valid = t_{DSV}
3: DQ output setup = t_{OSU}
4: DQ output hold = t_{OH}
5: CK transition to RWDS valid = t_{CKDS}
6: CK transition to input DQ valid = t_{CKD}
7: RWDS transition to input DQ valid = t_{DSS}
8: Input DQ invalid to RWDS transition = t_{DSH}
9: Chip select hold after CK falling edge = t_{CSH}
10: Chip select HIGH between transactions = t_{CSHI}

Figure 61 HYPERBUS™ timing diagram

27 Ordering information

The XMC7100 microcontroller part numbers and features are listed in **Table 64**.

Table 64 XMC7100 ordering information

Product	Package	CM7 cores	Code-flash (KB)	Work-flash (KB)	RAM (KB)	ADC channels	SCB channels	Ethernet channels	Temperature grade	JTAG ID code
XMC7100-F100K1088	100-TEQFP	1	1088	128	192	37	9	1	125°C	0x1E944069
XMC7100-F100K2112	100-TEQFP	1	2112	128	384	37	9	1	125°C	0x1E945069
XMC7100-F100K4160	100-TEQFP	1	4160	256	768	37	9	1	125°C	0x1E946069
XMC7100D-F100K2112	100-TEQFP	2	2112	128	384	37	9	1	125°C	0x1E947069
XMC7100D-F100K4160	100-TEQFP	2	4160	256	768	37	9	1	125°C	0x1E948069
XMC7100-F144K2112	144-TEQFP	1	2112	128	384	52	10	1	125°C	0x1E949069
XMC7100-F144K4160	144-TEQFP	1	4160	256	768	52	10	1	125°C	0x1E94A069
XMC7100D-F144K2112	144-TEQFP	2	2112	128	384	52	10	1	125°C	0x1E94B069
XMC7100D-F144K4160	144-TEQFP	2	4160	256	768	52	10	1	125°C	0x1E94C069
XMC7100-F176K4160	176-TEQFP	1	4160	256	768	64	10	1	125°C	0x1E94D069
XMC7100D-F176K4160	176-TEQFP	2	4160	256	768	64	10	1	125°C	0x1E94E069
XMC7100-E272K4160	272-BGA	1	4160	256	768	72	11	1	125°C	0x1E94F069
XMC7100D-E272K4160	272-BGA	2	4160	256	768	72	11	1	125°C	0x1E950069

27.1 Part number nomenclature

Table 65 Ordering code nomenclature

Description	Values	Meaning	Comment
XMC prefix	XMC	XMC prefix- industrial microcontroller	Fixed
Series name	7100	Entry level XMC7000 series	–
Dual-core option	D	Dual-core option based on both dies	Optional. Omitting “D” in part number means single core version
Code-flash/ Work-flash/RAM density	1088	1088 KB / 128 KB / 192 KB	–
	2112	2112 KB / 128 KB / 384 KB	
	4160	4160 KB / 256 KB / 768 KB	
PKG pin count	100	100-pin	PKG pin count options
	144	144-pin	
	176	176-pin	
	272	272-ball	
Package option	F	TEQFP	Available package options
	E	BGA	

28 Packaging

The XMC7100 microcontroller is offered in the packages listed in the **Table 66**.

Table 66 Package Information

Package	Dimensions[74]	Contact/lead pitch	Coefficient of thermal expansion[73]	I/O pins
272-BGA	16 × 16 × 1.70 mm (max)	0.8-mm	a1[75] = 6 ppm/°C, a2[76] = 25 ppm/°C	220
176-TEQFP	24 × 24 × 1.60 mm (max)	0.5-mm	a1 = 9.5 ppm/°C, a2 = 37 ppm/°C	148
144-TEQFP	20 × 20 × 1.60 mm (max)	0.5-mm	a1 = 9.5 ppm/°C, a2 = 36.7 ppm/°C	116
100-TEQFP	14 × 14 × 1.60 mm (max)	0.5-mm	a1 = 9.4 ppm/°C, a2 = 36 ppm/°C	72

Note
73. The numbers are estimated values based simulation only and are based on a single bill of material combination per package type.

Table 67 Package characteristics

Parameter	Description	Conditions	Min	Typ	Max	Unit
T_A	Operating ambient temperature	-	–40	–	125	°C
T_J	Operating junction temperature	–	–	–	150	°C
$R_{\theta JA}$	Package thermal resistance, junction to ambient θ_{JA}[77, 78]	272-BGA	–	–	21.6	°C/W
		176-TEQFP	–	–	17.8	°C/W
		144-TEQFP	–	–	17.4	°C/W
		100-TEQFP	–	–	18.3	°C/W
$R_{\theta JB}$	Package thermal resistance, junction to board θ_{JB}	272-BGA	–	–	12.8	°C/W
		176-TEQFP	–	–	13.0	°C/W
		144-TEQFP	–	–	12.3	°C/W
		100-TEQFP	–	–	10.4	°C/W
$R_{\theta JC}$	Package thermal resistance, junction to case θ_{JC}	272-BGA	–	–	10.4	°C/W
		176-TEQFP	–	–	8.0	°C/W
		144-TEQFP	–	–	8.1	°C/W
		100-TEQFP	–	–	8.5	°C/W

Notes
74. The dimensions (column 2) are valid for room temperature.
75. a1 = CTE (coefficient of thermal expansion) value below T_g (ppm/°C) (T_g is glass transition temperature which is 131°C).
76. a2 = CTE value above T_g (ppm/°C).
77. Maximum value °C/Watt shown is for T_A = 125°C.
78. Board condition complies to JESD51-7(4-layers).

Table 68 Solder reflow peak temperature, Package moisture sensitivity level (MSL), IPC/JEDEC J-STD-2

Package	Maximum peak temperature (°C)	Maximum time at peak temperature (s)	MSL
272-BGA	260	30	3
176-TEQFP	260	30	3
144-TEQFP	260	30	3
100-TEQFP	260	30	3

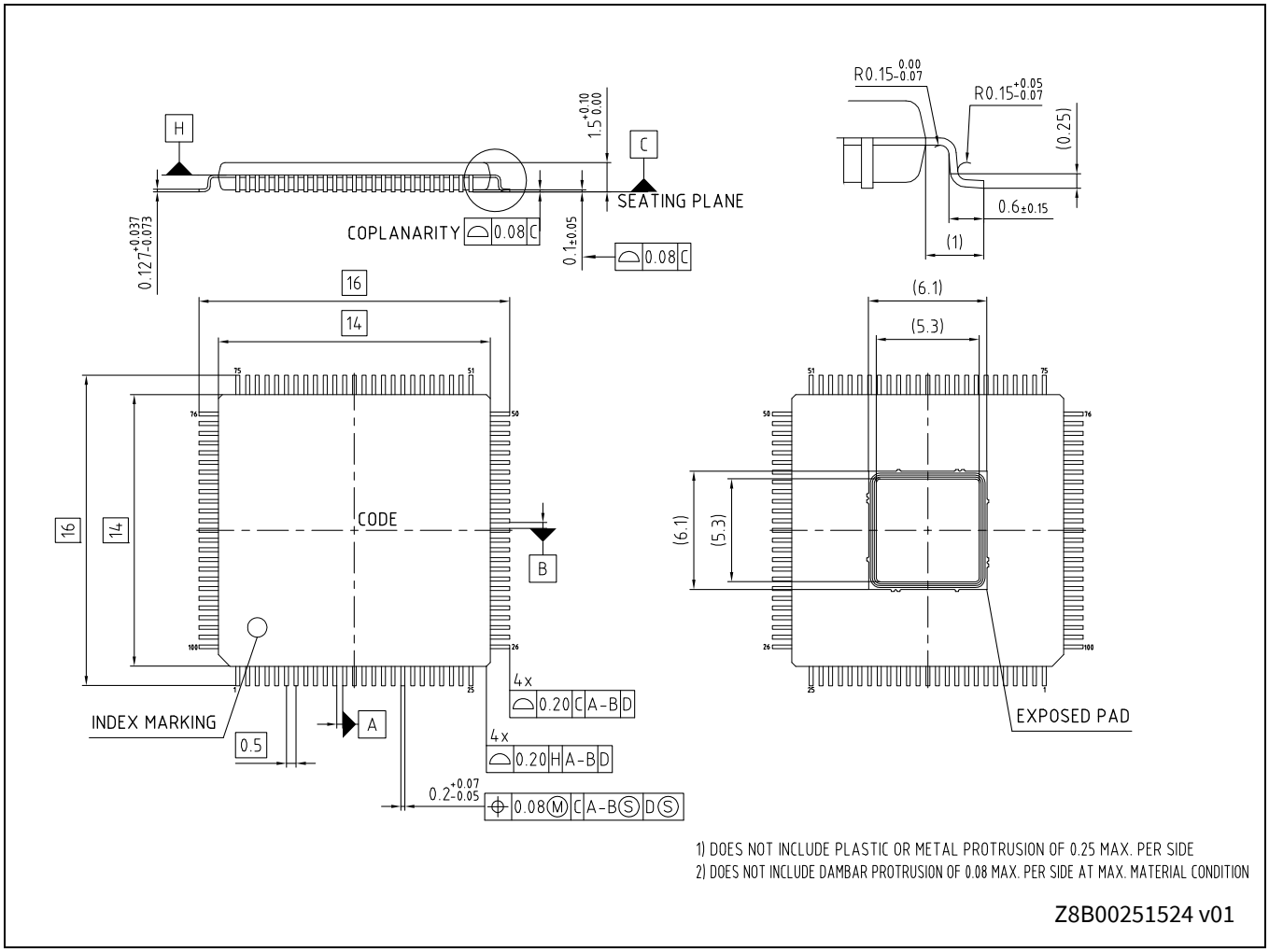

Figure 62 100-pin TEQFP (14.0 × 14.0 × 1.6 mm) LED100 (PG-TQFP-100), package outline

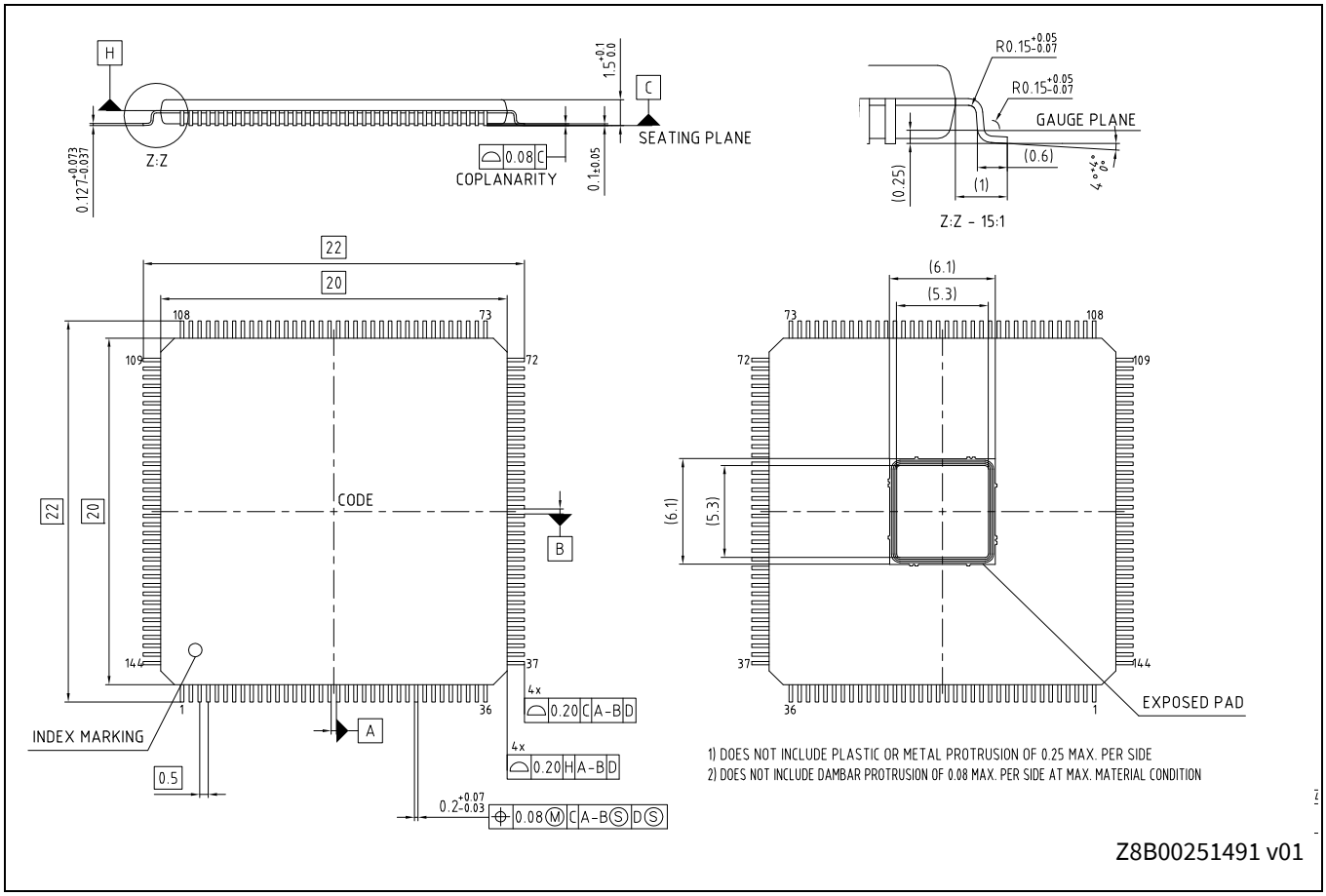

Figure 63 **144-pin TEQFP (20.0 × 20.0 × 1.6 mm) LEL144 (PG-TQFP-144), package outline**

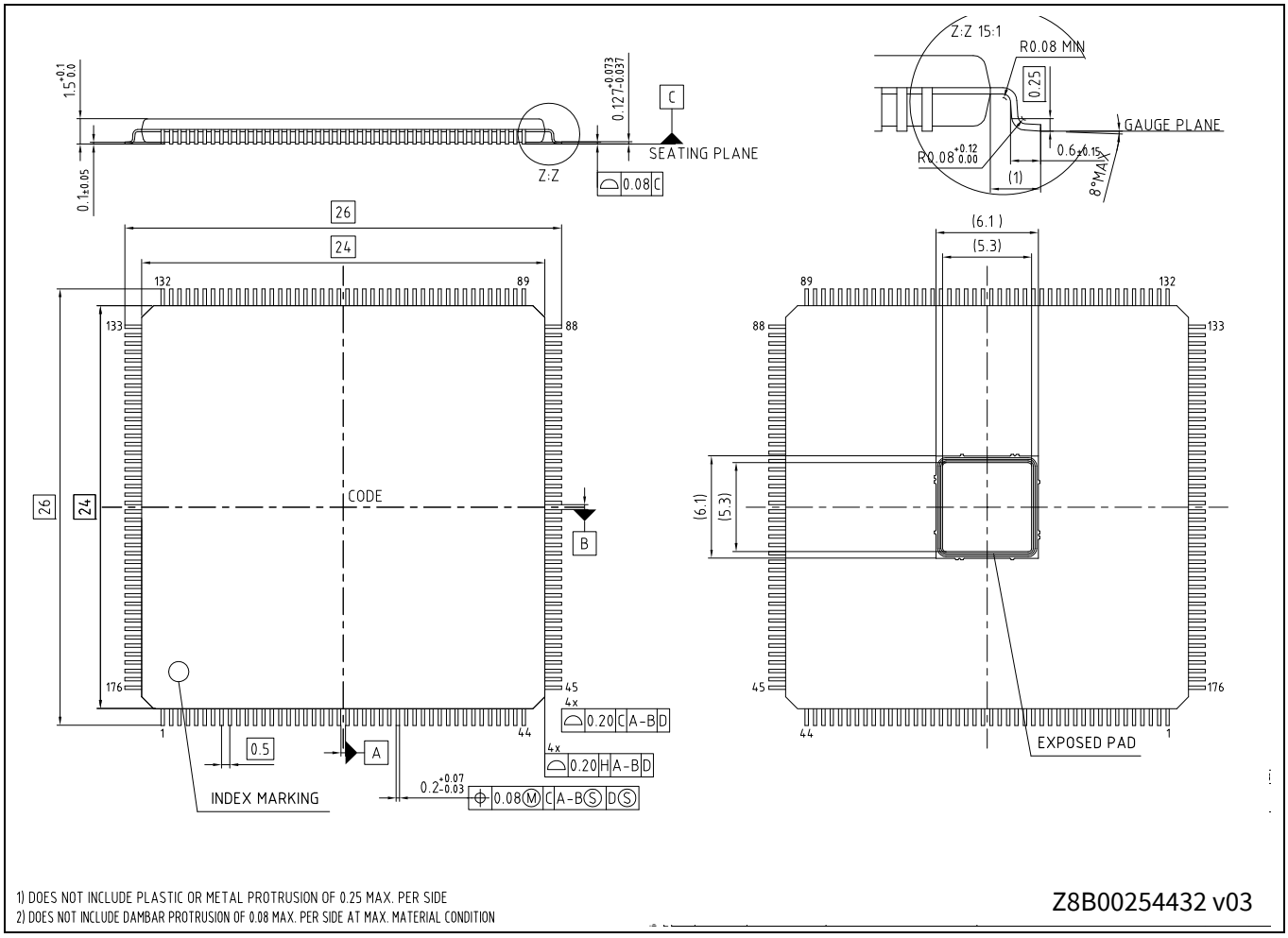

Figure 64 **176-pin TEQFP (24.0 × 24.0 × 1.6 mm) LEN176 (PG-TQFP-176), package outline**

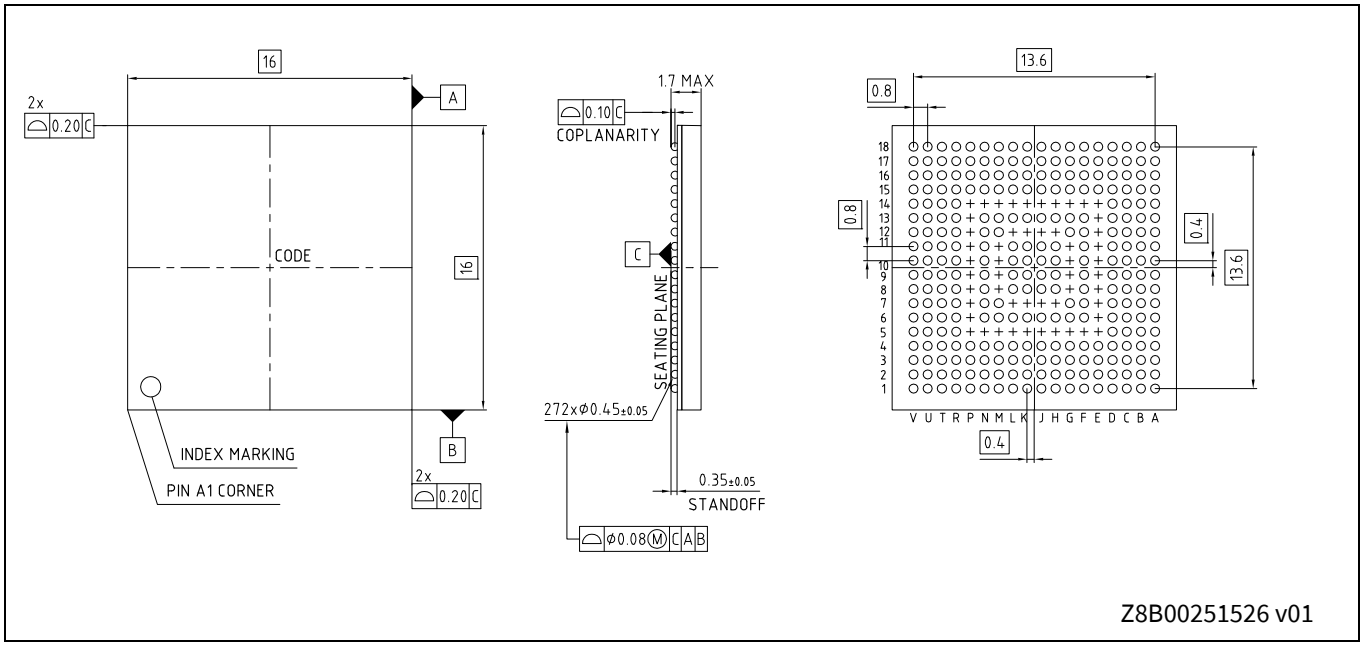

Figure 65 **272-ball FBGA (16.00 × 16.00 × 1.70 mm) LBM272 (PG-LFBGA-272), package outline**

29 Appendix

29.1 Bootloading or end-of-line (EoL) programming

- Triggered at device startup, if a trigger condition is applied
- CAN communication may be used
- Bootloader polls for the communication on CAN at separate time frames, until the overall 300-second timeout is reached
- If a bootloader command is received on either communication interface, the polling stops and bootloader starts using this interface

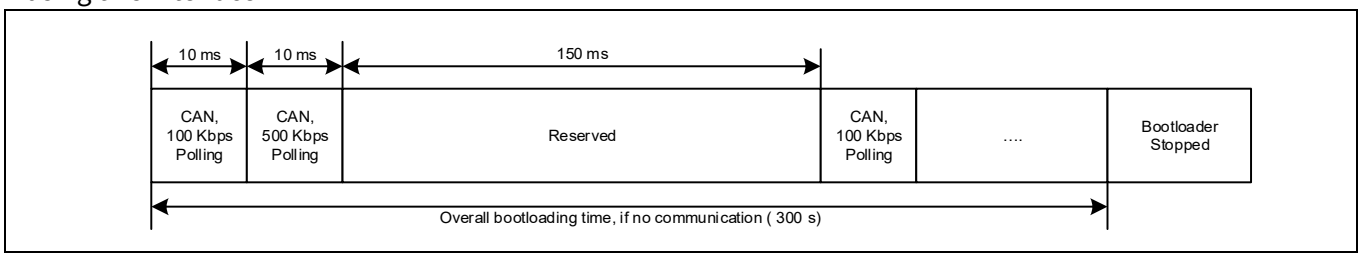

Figure 66 Bootloading sequence

Table 69 CAN interface details

Sl. No.	CAN interface	Configuration
1	CAN Mode	Classic CAN
2	CAN Instance	CAN0, Channel#1
3	CAN TX	P0.2 / CAN0_1_TX
4	CAN RX	P0.3 / CAN0_1_RX
5	CAN Transceiver NSTB / EN (Low)	P23.3 (optional)
6	CAN Transceiver EN / EN (High)	P2.1 (optional)
7	CAN RX Message ID	0x1A1
8	CAN TX Message ID	0x1B1
9	Baud	100 or 500 kbps alternating

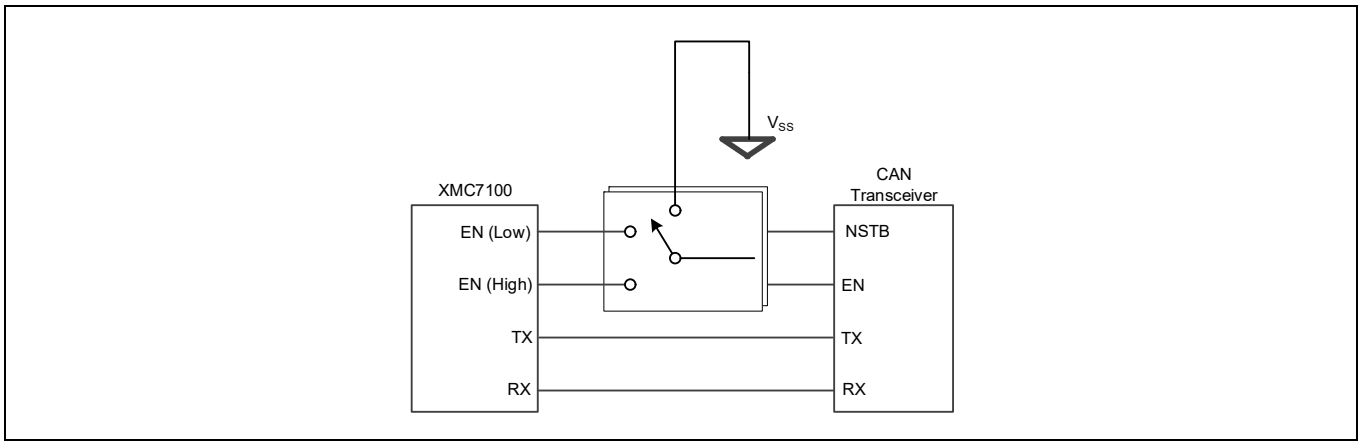

Figure 67 MCU to CAN transceiver connections

29.2 External IP revisions

Table 70 IP revisions

Module	IP	Revision	Vendor
SDHC	mxsdhc	version 1.70a	Synopsys
CANFD	mxttcanfd	M_TTCAN IP revision: Rev.3.2.3	Bosch
Arm® Cortex®-M0+	armcm0p	Cortex®-M0+ AT590-r0p1-00rel0	Arm®
Arm® Cortex®-M7	armcm7	Cortex®-M7-r1p1-00rel0	Arm®
Arm® Coresight	armcoresighttk	CoreSight-SoC-TM100-r3p2-00rel0	Arm®
Ethernet	mxeth	GEM_GXL r1p09	Cadence

30 Acronyms

Table 71 Acronyms used in the document

Acronym	Description
A/D	Analog to digital
ABS	Absolute
ADC	Analog to Digital converter
AES	Advanced encryption standard
AHB	AMBA (advanced microcontroller bus architecture) high-performance bus, Arm® data transfer bus
Arm®	Advanced RISC machine, a CPU architecture
BOD	Brown-out detection
CAN FD	Controller Area Network with Flexible Data rate
CMOS	Complementary metal-oxide-semiconductor
CPU	Central Processing Unit
CRC	Cyclic redundancy check, an error-checking protocol
CSV	Clock supervisor
CTI	Cross Trigger Interface
DES	Data encryption standard
ECC	Error correcting code
ECO	External crystal oscillator
ETM	Embedded Trace Macrocell
FLL	Frequency Locked Loop
FPU	Floating point unit
GPIO	General-purpose input/output
HSM	Hardware security module
I/O	Input/output
I^2C	Inter-Integrated Circuit, a communications protocol
I^2S	Inter-Integrated Circuit Sound
ILO	Internal low-speed oscillator
IMO	Internal main oscillator
IPC	Inter-processor communication
IrDA	Infrared interface
IRQ	Interrupt request
JTAG	Joint test action group
LVD	Low voltage detection
MCU	Microcontroller Unit
MCWDT	Multi-counter watchdog timer
M-DMA	Memory-Direct Memory Access
MISO	Master-in slave-out
MMIO	Memory mapped I/O
MOSI	Master-out slave-in
MPU	Memory protection unit

Table 71 Acronyms used in the document

Acronym	Description
OTA	over-the-air programming
OTP	one-time programmable
OVD	overvoltage detection
PASS	Programmable Analog Subsystem
P-DMA	Peripheral-Direct Memory Access
PLL	Phase Locked Loop
POR	Power-on reset
PPU	Peripheral protection unit
PRNG	Pseudorandom number generator
PSoC	Programmable system on chip
PWM	Pulse-width modulation
RAM	Random access memory
RISC	Reduced-instruction-set computing
ROM	Read only memory
RTC	Real-time clock
SAR	Successive approximation register
SCB	Serial communication block
SCL	I^2C serial clock
SDA	I^2C serial data
SHA	Secure hash algorithm
SHE	Secure hardware extension
SMPU	Shared memory protection unit
SPI	Serial peripheral interface, a communications protocol
SRAM	Static random access memory
SWD	Single wire debug
TCM	Tightly Coupled Memory
TCPWM	Timer/Counter Pulse-width modulator
TTL	Transistor-transistor logic
TRNG	True random number generator
UART	Universal Asynchronous Transmitter Receiver, a communications protocol
WCO	Watch crystal oscillator
WDT	Watchdog timer reset
XIP	eXecute-in-place
XTAL	Crystal

31 Errata

This section describes the errata for the XMC7100 product family. Details include trigger conditions, scope of impact, available workaround, and silicon revision applicability. Contact your local Infineon Sales Representative if you have further questions.

Part numbers affected

Part numbers
All XMC7100 parts

XMC7100 qualification status

Production samples

XMC7100 errata summary

The following table defines the errata applicability to available XMC7100 family devices.

Items	Errata ID	XMC7100	Silicon rev.	Fix status
[1] **CAN FD RX FIFO top pointer feature does not function as expected**	96	All parts	B	No silicon fix planned. Use workaround.
[2] **CAN FD debug message handling state machine is not reset to Idle state when CANFD_CH_CCCR.INIT is set**	97			No silicon fix planned. Use workaround.
[3] **Limitation of the memory hole in SCB register space**	124			No silicon fix planned. Use workaround.
[4] **Limitation of the memory hole in Ethernet (ETH) register space**	128			No silicon fix planned. Use workaround.
[5] **CAN FD controller message order inversion when transmitting from dedicated TX Buffers configured with same Message ID**	147			No silicon fix planned. Use workaround.
[6] **CAN FD incomplete description of Dedicated TX Buffers and TX Queue related to transmission from multiple buffers configured with the same Message ID**	167			No silicon fix planned. Use workaround. TRM will be updated.
[7] **Misleading status is returned for Flash and eFuse system calls, if there are pending NC ECC faults in SRAM controller #0**	175			No silicon fix planned. Reference manual was updated.
[8] **WDT reset causes loss of SRAM retention**	176			No silicon fix planned. Reference manual was be updated.
[9] **RMII TX output maximum delay spec change for GPIO_STD**	177			No silicon fix planned.
[10] **Crypto ECC errors may be set after boot with application authentication**	185			No silicon fix planned. Reference manual was be updated.

Items	Errata ID	XMC7100	Silicon rev.	Fix status
[11] **Incomplete erase of Code Flash cells could happen Erase Suspend / Erase Resume is used along with Erase Sector operation in Non-Blocking mode**	198	All parts	B	Fixed to update the Flash settings from date code 240xxxxx.
[12] **Limitation for keeping the port state from peripheral IP after wakeup from Deep Sleep**	199			No silicon fix planned. Reference manual was be updated.
[13] **A part of the PWR_CTL2.BGREF_LPMODE description is lacked in the existing register reference manual**	201			No silicon fix planned. Reference manual was be updated.
[14]**Limitation of clock configuration before entering Deep Sleep mode**	202			No silicon fix planned. Reference manual was be updated.
[15] **Several data retention information in the register reference manual are incorrect**	203			No silicon fix planned. Reference manual was be updated.
[16]**SCBx_INTR_TX.UNDERFLOW bit may be set unintentionally**	204			No silicon fix planned. Reference manual was be updated.
[17]**Hardfault may occur when calling the SROM APIs listed below while executing EraseSector or ProgramRow in non-blocking mode**	206			No silicon fix planned. Reference manual was be updated.
[18] **CAN FD sporadic data corruption (payload) in case acceptance filtering does not finish before reception of data R3 (DB7..DB4) is complete**	209			No silicon fix planned. Use workaround.
[19]**Description for PASS SARx to TCPWMx direct connect triggers one-to-one is incorrect in datasheet**	212			Datasheet was updated.

1. CAN FD RX FIFO top pointer feature does not function as expected	
Problem definition	RX FIFO top pointer function calculates the address for received messages in Message RAM by hardware. This address should restart back from the start address after reading all messages of RX FIFO n size (n: 0 or 1). However, the address does not restart back from the start address when RX FIFO n size is set to 1(CANFD_CH_RXFnC.FnS = 0x01). This results in CPU/DMA reading messages from the wrong address in Message RAM.
Parameters affected	NA
Trigger condition(s)	The RX FIFO top pointer function is used when RX FIFO n size is set to 1 element (CANFD_CH_RXFnC.FnS = 0x01).
Scope of impact	Received message cannot be correctly read by using the RX FIFO top pointer function, when RX FIFO n size is set to 1 element.
Workaround	Any of the following can be used as a workaround: 1) Set RX FIFO n size to 2 or more when using RX FIFO top pointer function. 2) Do not use the RX FIFO top pointer function when RX FIFO n size is set to 1 element. Instead of RX FIFO top pointer, read received messages from the Message RAM directly.
Fix status	No silicon fix planned. Use workaround.

2. CAN FD debug message handling state machine is not reset to Idle state when CANFD_CH_CCCR.INIT is set	
Problem definition	If either of the CANFD_CH_CCCR.INIT bits is set by the Host or when the M_TTCAN module enters BusOff state, the debug message handling state machine stays in its current state instead of being reset to Idle state. Configuring the bit CANFD_CH_CCCR.CCE does not change CANFD_CH_RXF1S.DMS.
Parameters affected	NA
Trigger condition(s)	Either of the CANFD_CH_CCCR.INIT bits is set by the Host or when the M_TTCAN module enters BusOff state.
Scope of impact	The errata is limited to the use case when the debug on CAN functionality is active. Normal operation of the CAN module is not affected, in which case the debug message handling state machine always remains in Idle state. In the described use case, the debug message handling state machine is stopped and remains in the current state signaled by the CANFD_CH_RXF1S.DMS bit. In case CANFD_CH_RXF1S.DMS is set to 0b11, the DMA request remains active. Bosch classifies this as a non-critical error with low severity, there is no fix for the IP. Bosch recommends the workaround listed here.
Workaround	In case the debug message handling state machine has stopped while CANFD_CH_RXF1S.DMS is 0b01 or 0b10, it can be reset to Idle state by hardware reset or by reception of debug messages after CANFD_CH_CCCR.INIT is reset to zero.
Fix status	No silicon fix planned. Use workaround.

3. Limitation of the memory hole in SCB register space	
Problem Definition	The memory hole [offset address: 0x1000 to 0xFFFF] inside SCB register space is not aligned to the below defined spec. The offset address bits [15:12] are ignored and treated as 4'b0000, so write/read access to offset address [0x1000 to 0xFFFF], will actually happen to [0x0000 to 0x0FFF]. - Access to address gaps in memory mapped space: writes are ignored and any read returns a zero.
Parameters Affected	NA
Trigger Condition(s)	Access to the memory hole [offset address: 0x1000 to 0xFFFF] in SCB register space.
Scope of Impact	The memory hole [offset address: 0x1000 to 0xFFFF] in SCB register space is not aligned to other IP registers.
Workaround	Do not access to the memory hole [offset address: 0x1000 to 0xFFFF] in SCB register space.
Fix Status	No silicon fix planned.

4. Limitation of the memory hole in Ethernet (ETH) register space	
Problem Definition	The memory hole [offset address: 0x2000 to 0xFFFF] in ETH register space has the below mentioned original spec. However, when accessing to address gaps within [0x1000 to 0x1FFF], the offset address bits [15:13] are ignored and treated as 3'b000, so write/read access to offset address [0x3000 to 0x3FFF, 0x5000 to 0x5FFF, 0x7000 to 0x7FFF, 0x9000 to 0x9FFF, 0xB000 to 0xBFFF, 0xD000 to 0xDFFF, 0xF000 to 0xFFFF], will actually happen to [0x1000 to 0x1FFF]. - Access to address gaps within [0x0000 to 0x0FFF]: writes are ignored and any read returns a zero. - Access to address gaps within [0x1000 to 0x1FFF]: returns AHB ERROR.
Parameters Affected	NA
Trigger Condition(s)	Access to the memory hole [offset address: 0x3000 to 0x3FFF, 0x5000 to 0x5FFF, 0x7000 to 0x7FFF, 0x9000 to 0x9FFF, 0xB000 to 0xBFFF, 0xD000 to 0xDFFF, 0xF000 to 0xFFFF] in ETH register space.
Scope of Impact	Write/read access to offset address [0x3000 to 0x3FFF, 0x5000 to 0x5FFF, 0x7000 to 0x7FFF, 0x9000 to 0x9FFF, 0xB000 to 0xBFFF, 0xD000 to 0xDFFF, 0xF000 to 0xFFFF], will actually happen to [0x1000 to 0x1FFF].
Workaround	Do not access to the memory hole [offset address: 0x3000 to 0x3FFF, 0x5000 to 0x5FFF, 0x7000 to 0x7FFF, 0x9000 to 0x9FFF, 0xB000 to 0xBFFF, 0xD000 to 0xDFFF, 0xF000 to 0xFFFF] in ETH register space.
Fix Status	No silicon fix planned.

5. CAN FD controller message order inversion when transmitting from dedicated TX Buffers configured with same Message ID	
Problem definition	Configuration: Several Tx Buffers are configured with same Message ID. Transmission of these TX Buffers is requested sequentially with a delay between the individual TX requests. Expected behavior: When multiple Tx Buffers that are configured with the same Message ID have pending TX requests, they shall be transmitted in ascending order of their TX Buffer numbers. The TX Buffer with lowest buffer number and pending TX request is transmitted first. Observed behavior: It may happen, depending on the delay between the individual TX requests, that in the case where multiple TX Buffers are configured with the same Message ID the TX Buffers are not transmitted in order of the TX Buffer number (lowest number first).
Parameters affected	NA
Trigger condition(s)	When multiple TX Buffers that are configured with the same Message ID have pending TX requests.
Scope of impact	In the case described it may happen, that TX Buffers configured with the same Message ID and pending TX request are not transmitted with lowest TX Buffer number first (message order inversion).
Workaround	Any of the following: 1) First write the group of TX message with the same Message ID to the Message RAM and then afterwards request transmission of all these messages concurrently by a single write access to CANFDx_CHy_TXBAR. Before requesting a group of TX messages with this Message ID ensure that no message with this Message ID has a pending TX request. 2) Use the Tx FIFO instead of dedicated TX Buffers for the transmission of several messages with the same Message ID in a specific order. Applications not able to use workaround #1 or #2 can implement a counter within the data section of their messages sent with same ID in order to allow the recipients to determine the correct sending sequence.
Fix status	No silicon fix planned. Use workaround.

6. CAN FD incomplete description of Dedicated TX Buffers and TX Queue related to transmission from multiple buffers configured with the same Message ID	
Problem definition	The following are the updated description in the sections "Dedicated TX Buffers" and "TX Queue" of the architecture reference manual related to the transmission from multiple buffers configured with the same Message ID. Dedicated TX buffers - TRM statement: If multiple TX buffers are configured with the same Message ID, the TX buffer with the lowest buffer number is transmitted first. - Enhancement: These TX buffers shall be requested in ascending order with lowest buffer number first. Alternatively all TX buffers configured with the same Message ID can be requested simultaneously by a single write access to CANFDx_CHy_TXBAR. TX queue - TRM statement: If multiple queue buffers are configured with the same Message ID, the queue buffer with the lowest buffer number is transmitted first. - Replacement: In case that multiple TX queue buffers are configured with the same Message ID, the transmission order depends on numbers of the buffers where the messages were stored for transmission. As these buffer numbers depend on the then current states of the PUT Index, a prediction of the transmission order is not possible. - Reference manual statement: An Add Request cyclically increments the Put Index to the next free TX Buffer. - Replacement: The PUT Index always points to that free buffer of the TX Queue with the lowest number.
Parameters affected	NA
Trigger condition(s)	Using multiple dedicated TX buffers or TX queue buffers configured with the same Message ID.
Scope of impact	In the case the dedicated TX buffers with the same Message ID are not requested in ascending order or at the same time or in case of multiple TX Queue Buffers with the same Message ID, it cannot be guaranteed, that these messages are transmitted in ascending order with lowest buffer number first.
Workaround	In case a defined order of transmission is required the TX FIFO shall be used for transmission of messages with the same Message ID. Alternatively dedicated TX Buffers with the same Message ID shall be requested in ascending order with lowest buffer number first or by a single write access to CANFDx_CHy_TXBAR. Alternatively a single TX Buffer can be used to transmit those messages one after the other.
Fix status	No silicon fix planned. Use workaround. Reference manual was updated.

7. Misleading status is returned for Flash and eFuse system calls, if there are pending NC ECC faults in SRAM controller #0	
Problem definition	Flash and eFuse system calls will return misleading status of 0xF0000005 (“Page is write protected”) even for non-protected row, or 0xF0000002 (“Invalid eFuse address”) for valid eFuse address in case of pending NC ECC faults in SRAM controller #0.
Parameters affected	Return status of Flash and eFuse system calls.

Trigger condition(s)	NC ECC fault(s) pending in SRAM controller #0 and SWPUs are populated in the design.
Scope of impact	Flash and eFuse system calls will not work until the NC ECC fault(s) pending in SRAM controller #0 is/are properly handled.
Workaround	If the NC ECC fault(s) are not due to HW malfunction (i.e. if the faults are due to usage of non-initialized SRAM or improper SRAM initialization), then clearing of these pending faults will resolve the issue.
Fix status	No silicon fix planned. Reference manual was updated.

8. WDT reset causes loss of SRAM retention	
Problem definition	Architecture TRM Table on “Reset Cause Distribution” shows that, the WDT reset can retain SRAM if there is an orderly shutdown of the SRAM only during a warning interrupt. However, this is wrong. WDT reset causes loss of SRAM retention.
Parameters affected	NA
Trigger condition(s)	WDT reset
Scope of impact	WDT reset causes loss of SRAM retention.
Workaround	None
Fix status	No silicon fix planned. Reference manual was updated.

9. RMII TX output maximum delay spec change for GPIO_STD	
Problem definition	RMII TX output maximum delay specification has been changed from 14 ns to 14.6 ns for GPIO_STD.
Parameters affected	SID393
Trigger condition(s)	Using GPIO_STD as RMII
Scope of impact	This spec change will cause that the PCB delay budget between MCU and PHY cut down to 1.4 ns from 2 ns. [PCB delay budget = REF_CLK period (e.g. 20 ns) – SID393 (14.6 ns) – PHY RXD setup (e.g. 4 ns)]
Workaround	None
Fix status	No silicon fix planned.

10.Crypto ECC errors may be set after boot with application authentication	
Problem definition	Due to the improper initialization of the Crypto memory buffer, Crypto ECC errors may be set after boot with application authentication. In spit e of the Crypto ECC errors, the result of the authentication is reliable.
Parameters affected	NA
Trigger condition(s)	Boot device with application authentication.
Scope of impact	Crypto ECC errors may be set after boot with application authentication.

Workaround	Clear or ignore Crypto ECC errors which were generated during boot with application authentication.
Fix status	No silicon fix planned. Reference manual was updated.

11.Incomplete erase of Code Flash cells could happen Erase Suspend / Erase Resume is used along with Erase Sector operation in Non-Blocking mode	
Problem definition	Code Flash memory can be erased in “Non-Blocking” mode; a Non-Blocking mode supported option allows users to suspend an ongoing erase sector operation. When an ongoing erase operation is interrupted using “Erase Suspend” and “Erase Resume”, Flash cells may not have been erased completely, even after the erase operation complete is indicated by FLASHC_STA TUS register. Only Code Flash is impacted by this issue; Work Flash and Supervisory Flash (SFlash) are not impacted.
Parameters affected	NA
Trigger condition(s)	Using EraseSector System Call in Non-Blocking mode for CM0+ to erase Code Flash and the ongoing erase operation is interrupted using EraseSuspend and EraseResume System calls.
Scope of impact	When Code Flash sectors are erased in Non-Blocking mode and the ongoing erase operation is interrupted by Erase Suspend / Erase Resume, it cannot be guaranteed that the Code Flash cells are fully erased. Any read on the Code Flash area after the erase is comple te or read on the progra mmed data after ProgramRow is complete can trigger ECC errors.
Workaround	Use any of the following: 1) User can use Non-Blocking mode for EraseSector, but must not interrupt the erase operation using Erase Suspend / Erase Resume. 2) If a Code Flash sector erase operation is interrupted using Erase Suspend / Erase Resume, then erase the same sector again without Erase Suspend / Erase Resume before reading the sector or programming the sector.
Fix status	Fixed to update the Flash settings from date code 240xxxxx.

12.Limitation for keeping the port state from peripheral IP after wakeup from Deep Sleep	
Problem definition	The port state is not retained when the port selects peripheral IP (except for CAN FD) and MCU wakes up from Deep Sleep.
Parameters affected	NA
Trigger condition(s)	The port selects peripherals (except for CAN-FD), and MCU wakes up from Deep Sleep.
Scope of impact	Unexpected port output change might affect user system.
Workaround	If the port selects peripherals (except for CAN FD), and the port output value needed to be maintained after wakeup from Deep Sleep, set HSIOM_PRTx_PORT_SEL.IOy_SEL = 0 (GPIO) before Deep Sleep and set the required output value in GPIO configuration registers. After wakeup, change HSIOM_PRTx-_PORT_SEL.IOy_SEL back to the peripheral module as needed.
Fix status	No silicon fix planned. Reference manual was updated.

13. A part of the PWR_CTL2.BGREF_LPMODE description is lacked in the existing register reference manual	
Problem definition	The following is missing from the PWR_CTL2.BGREF_LPMODE description in the existing register TRM. This register will not set unless CLK_ILO0 _CONFIG.ILO0_ENABLE = 1. When changing back to continuous operation, keep ILO0 enabled for at least 5 ILO0 cycles after clearing this bit to allow for internal synchronization.

Parameters affected	NA
Trigger condition(s)	Using the PWR_CTL2.BGREF_LPMODE
Scope of impact	PWR_CTL2.BGREF_LPMODE may not be set or cleared.
Workaround	Use the PWR_CTL2.BGREF_LPMODE according to the following description. This register will not set unless CLK_ILO0_CONFIG.ILO0_ENABLE==1. When changing back to continuous operation, keep ILO0 enabled for at least 5 ILO0 cycles after clearing this bit to allow for internal synchronization.
Fix status	No silicon fix planned. Reference manual was updated.

14. Limitation of clock configuration before entering Deep Sleep mode	
Problem definition	Deep Sleep should not be entered while any FLL/PLL is enabled and uses ECO as its reference clock. Since the unstable ECO clock after wakeup is outside the allowed reference clock limits for FLL/PLL, there is possibility of failing the Deep Sleep wakeup.
Parameters affected	NA
Trigger condition(s)	Deep Sleep transition while any FLL/PLL is enabled and using ECO as its reference clock.
Scope of impact	There is a possibility of Deep Sleep wakeup failing.
Workaround	If any FLL/PLL is operating with the ECO as its reference clock, change the clock to either ECO direct or IMO direct or IMO with FLL/PLL before entering Deep Sleep.
Fix status	No silicon fix planned. Reference manual was updated.

15.Several data retention information in the register reference manual are incorrect	
Problem definition	The following registers are described as 'Retained' in the register reference manual while it is not guaranteed that the value before entering Deep Sleep mode is still readable from the register: - SARADC: PASSx_SARy_CHz_RESULT - SRSS: PWR_LVD_STATUS - SRSS: PWR_LVD_STATUS2 - SRSS: CLK_CAL_CNT1 - SRSS: CLK_CAL_CNT2 - SRSS: CLK_FLL_STATUS - SRSS: WDT_INTR - SRSS: WDT_INTR_MASKED - SRSS: CLK_PLL400Mx_STATUS
Parameters affected	NA
Trigger condition(s)	Use of the related function and wakeup from Deep Sleep mode.
Scope of impact	The values before entering Deep Sleep are not retained.
Workaround	For PASSx_SARy_CHz_RESULT, any of following can be used as a workaround: 1) Store the conversion values at another memory location before entering Deep Sleep mode 2) Restart the conversion after wakeup from Deep Sleep mode. For the other registers: Rewrite the register value or read the status flags again after wakeup.
Fix status	No silicon fix planned. Reference manual will be updated.

16.SCBx_INTR_TX.UNDERFLOW bit may be set unintentionally	
Problem definition	There is a possibility of setting the SCBx_INTR_TX .UNDERFLOW bit even if the FIFO is not empty.
Parameters affected	NA
Trigger condition(s)	Using the TX FIFO for SCB when the AHB-Lite interface clock (CLK_GR6) frequency of the AHB bus is greater than 3x the SCB functionality clock (PCLK_SCBx_CLOCK).
Scope of impact	SCBx_INTR_TX.UNDERFLOW bit may be set unintentionally.
Workaround	Ignore the SCBx_INTR_TX.UNDERFLOW bit if the FIFO is not empty.
Fix status	No silicon fix planned. Reference manual will be updated.

17.Hardfault may occur when calling the SROM APIs listed below while executing EraseSector or ProgramRow in non-blocking mode	
Problem definition	The following SROM APIs read data from bank#0 (or bank#1 if dual bank mode with mapping B is used) in SFlash. While doing that, the check for active non-blocking erase or program of bank#0 (or bank#1 if dual bank mode with mapping B is used) is not performed. Therefore, reading bank#0 (or bank#1 if dual bank mode with mapping B is used) while there is an active erase/program operation triggers a bus error. This results in a hardfault occurrence based on the FLASHC_FLASH_CTL register settings. Affected SROM APIs: - ReadSWPU - WriteSWPU - GenerateHash - Checksum* - ComputeBasicHash* - CheckFactoryHash - ProgramWorkFlash** - SwitchOverRegulators - LoadRegulatorsTrims *: Do not call it to calculate on the bank where programming/erasing is in progress. **: Do not use it during non-blocking operation.
Parameters affected	NA
Trigger condition(s)	Calling the affected SROM APIs while executing EraseSector or ProgramRow in non-blocking mode on bank#0 (or bank#1 if dual bank mode with mapping B is used).
Scope of impact	The affected SROM APIs cannot be used while executing EraseSector or ProgramRow in non-blocking mode on bank#0 (or bank#1 if dual bank mode with mapping B is used).
Workaround	Do not use the affected SROM APIs while executing Er aseSector or ProgramRow in non-blocking mode on bank#0 (or bank#1 if dual bank mode with mapping B is used).
Fix status	No silicon fix planned. TRM will be updated.

18.CAN FD sporadic data corruption (payload) in case acceptance filtering does not finish before reception of data R3 (DB7..DB4) is complete

Problem definition

During frame reception the Rx Handler accesses the external Message RAM for acceptance filtering (read accesses) and for storing of the accepted messages (write accesses).
The time needed for acceptance filtering and for storing of a received message depends on
• The Host clock frequency
• The worst-case latency of the read and write accesses to the external Message RAM
• The number of configured filter elements
• The workload of the transmit message (Tx) handler in parallel to the receive message (Rx) handler
Received data bytes (DB0..DBm) from the CAN Core are buffered in the cache of the Rx Handler before they are written to the Message RAM (in words of 4 byte). Data words inside the Message RAM are numbered from R2 to Rn (n ≤ 17).

	31			24 23			16 15		8 7	0
R0	ESI	XTD	RTR	ID[28:0]						
R1A	ANMF	FIDX[6:0]		res	FDF	BRS	DLC[3:0]	RXTS[15:0]		
R1B	ANMF	FIDX[6:0]		res	FDF	BRS	DLC[3:0]	res	TSC	RXTSP [3:0]
R2	DB3[7:0]			DB2[7:0]			DB1[7:0]		DB0[7:0]	
R3	DB7[7:0]			DB6[7:0]			DB5[7:0]		DB4[7:0]	
...	...			...			...		...	
Rn	DBm[7:0]			DBm-1[7:0]			DBm-2[7:0]		DBm-3[7:0]	

Figure 1 RX buffer and FIFO element

Problem definition

Under the following conditions, a received message has corrupted data while the received message is signaled as valid to the host.

1) The data length code (DLC) of the received Message is greater than 4 (DLC > 4)

2) The storage of Ri of a received message into the Message RAM (after acceptance filtering is done) has not completed before R(i+1) is transferred from the CAN Core into the cache of the Rx Handler (where 2 ≤ i ≤ 5).

3) While condition 1) and 2) apply, a concurrent read of data word Ri from the cache and write of data word R(i+1) into the cache of the Rx handler happens.

The data will be corrupted in a way, that in the Message RAM R(i+1) has the same content as Ri.

Despite the corrupted data, the M_TTCAN signals the storage of a valid frame in the Message RAM:

- Rx FIFO: FIFO put index RXFnS.FnPI is updated.
- Dedicated Rx Buffer: New Data flag NDATn.NDxx is set.
- Interrupt flag IR.MRAF is not set.

The issue may occur in the FD Frame Format as well as in the Classic Frame Format.

Figure 2 shows how the available time for acceptance filtering and storage is reduced.

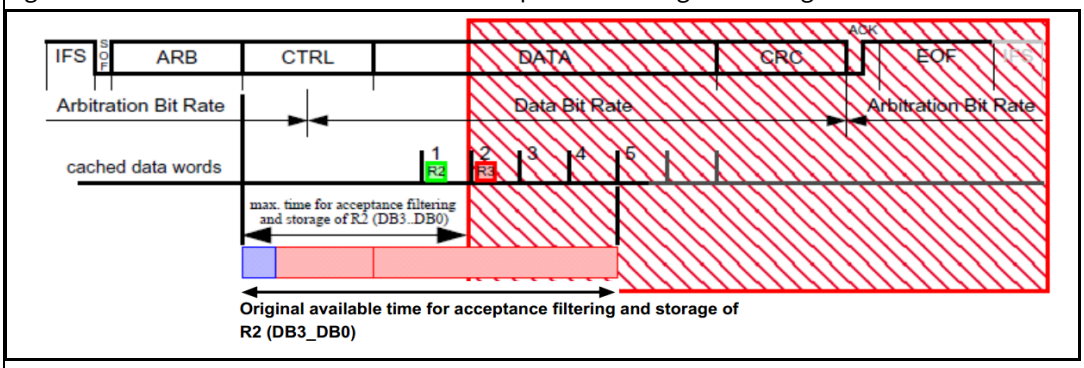

Figure 2 CAN Frame with DLC > 4

Table 1 Minimum host clock frequency for CAN FD when DLC = 5

Number of configured active filter element 11-bit IDs / 29-bit IDs [1,2]	Number of active CAN channels in an instance	Arbitration bit rate = 0.5 Mbps				Arbitration bit rate = 1 Mbps			
		Data bit rate = 0.5 Mbps	Data bit rate = 1 Mbps	Data bit rate = 2 Mbps	Data bit rate = 4 Mbps	Data bit rate = 1 Mbps	Data bit rate = 2 Mbps	Data bit rate = 4 Mbps	Data bit rate = 5 Mbps
32 / 16	2	3.9 MHz	7.1 MHz	13.1 MHz	22.8 MHz	7.7 MHz	14.1 MHz	26.1 MHz	31.5 MHz
	3	5.4 MHz	9.9 MHz	18.3 MHz	31.8 MHz	10.7 MHz	19.7 MHz	36.5 MHz	44.0 MHz
	4	6.9 MHz	12.7 MHz	23.5 MHz	40.8 MHz	13.8 MHz	25.3 MHz	46.9 MHz	56.5 MHz
64 / 32	2	7.4 MHz	13.5 MHz	24.9 MHz	43.4 MHz	14.7 MHz	26.9 MHz	49.8 MHz	60.0 MHz
	3	10.3 MHz	18.8 MHz	34.9 MHz	60.7 MHz	20.5 MHz	37.6 MHz	69.7 MHz	84.0 MHz
	4	13.2 MHz	24.2 MHz	44.8 MHz	78.0 MHz	26.3 MHz	48.4 MHz	89.5 MHz	107.9 MHz[3]
96 / 48	2	10.8 MHz	19.9 MHz	36.8 MHz	64.0 MHz	21.6 MHz	39.7 MHz	73.5 MHz	88.6 MHz
	3	15.1 MHz	27.8 MHz	51.5 MHz	89.6 MHz	30.2 MHz	55.6 MHz	102.9 MHz[3]	124.0 MHz[3]
	4	19.4 MHz	35.7 MHz	66.1 MHz	115.1 MHz[3]	38.8 MHz	71.4 MHz	132.2 MHz[3]	159.3 MHz[3]
128 / 64	2	14.3 MHz	26.3 MHz	48.6 MHz	84.7 MHz	28.4 MHz	52.5 MHz	97.2 MHz	117.2 MHz[3]
	3	20.0 MHz	36.8 MHz	68.0 MHz	118.5 MHz[3]	40.0 MHz	73.5 MHz	136.0 MHz[3]	164.0 MHz[3]
	4	25.7 MHz	47.2 MHz	87.5 MHz	152.3 MHz[3]	51.4 MHz	94.4 MHz	174.9 MHz[3]	210.8 MHz[3]

1. M_TTCAN always starts at filter element #0 and proceeds through the filter list to find a matching element. Acceptance filtering stops at the first matc element and the following filter elements are not evaluated for this message. Therefore, the sequence of configured filter elements has a significant im on the performance of the filtering process.
2. Acceptance filtering search for 11-bit IDs and 29-bit IDs filter element runs separately; only one configured filter setting should be considered. Searchi for one 29-bit filter element requires approximately double cycles for one 11-bit filter element.
3. Frequency is not reachable since the maximum host clock frequency for M_TTCAN in XMC7000 is 100 MHz.

Parameters affected	NA
Trigger condition(s)	Under the following conditions a received message has corrupted data while the received message is signaled as valid to the host: 1) The data length code (DLC) of the received message is greater than 4 (DLC > 4) 2) The storage of Ri of a received message into the Message RAM (after acceptance filtering is done) has not completed before R(i+1) is transferred from the CAN Core into the cache of the Rx Handler (where 2 ≤ i ≤ 5). 3) While condition 1) and 2) apply, a concurrent read of da ta word Ri from the cache and write of data word R(i+1) into the cache of the Rx handler happens.
Scope of impact	The erratum is limited to the case when the Host clock frequency used in the actual device is below the limit shown in Table 1. Corrupted data is written to the Rx FIFO element from the respective dedicated Rx Buffer. The received frame is nevertheless signaled as valid.
Workaround	Check whether the minimum Host clock frequency (shown in Table 1) is below the Host clock frequency used in the actual device. If yes, there is no problem with the selected configuration. If no, use one of the following two workarounds. 1) Try a different configuration by changing the following parameters until the actual Host clock frequency (CLK_GR5) is above the minimum host frequency shown in Table 1: • Increase the CLK_GR5 frequency in the actual device • Reduce the CAN-FD data bit rate • Reduce the number of configured filter elements • Reduce the number of active CAN channels in an instance Also, use DLC ≥ 8 instead of DLCs 5, 6, and 7 in the CAN environment/system, as they place higher demands on the minimum Host clock frequency (the worst case is DLC = 5) or restrict your CAN environment/system to DLC 4. Note: While changing the actual host clock frequency, CLK_GR5 must always be equal to or higher than PCLK_CANFD[x]_CLOCK_CAN[y] for all configurations. 2) Due to condition 3) listed in “Trigger Conditions”, the issue occurs only sporadically. Use an end-to-end (E2E) protection (for example, checksum or CRC covering the data field) and add it to all messages in the CAN system, to detect data corruption in the received frames.
Fix status	No silicon fix planned. Use workaround.

19.Description for PASS SARx to TCPWMx direct connect triggers one-to-one is incorrect in datasheet	
Problem definition	The existing datasheet shows the incorrect TCPWM input trigger selection (TR_IN_SEL) value 'trig=2', in the description for PASS SARx to TCPWMx direct connect triggers one-to-one. The correct value to calculate is '4' as shown in the architecture reference manual chapter 25 descriptions and table 25-2.
Parameters affected	NA
Trigger condition(s)	Using the triggers one-to-one for PASS SARx to TCPWMx direct connect
Scope of impact	The triggers one-to-one for PASS SARx to TCPWMx direct connect cannot work if TCPWM's input trigger selection is not correct.
Workaround	Use '4' as TCPWM's input trigger selection (TR_IN_SEL) value for PASS SARx to TCPWMx direct connect.
Fix status	Datasheet was updated.

Revision history

Document version	Date of release	Description of changes
**	2021-12-17	New datasheet.
*A	2022-10-20	Updated **Features** and **Architecture block diagram**. Updated 100-TQFP, 144 TQFP, and 176 TQFP package diagrams.
*B	2024-12-05	Updated **Table 1**, **Table 13**, **Table 15**, **Table 17**, **Table 32**, **Table 36**. Added pins in **Table 18**. Updated Group 6 description in **Table 23**. Updated **Table 37**, **Table 40**, **Table 48**, **Table 53**, **Table 59**, **Table 61**, **Table 63** and **Table 67**. Added **Table 49**, **Table 60**. Updated **Ethernet MAC**, **External memory interface**, **XMC7100 CPU start-up sequence**. Updated **Figure 5**, **Figure 28**, **Figure 58**, **Figure 59** and **Figure 61**. Added a note in **Table 66**. Updated and added **Errata**. Added Infineon Package code and updated the title in **Figure 60** and **Figure 62**. Updated the package diagrams: • 002-28239 to Z8B00251524 • 002-28240 to Z8B00251491 • 002-28241 to Z8B00254432 • 002-24865 to Z8B00251526 Updated the following to reflect the DMS title: • 272-BGA to 272-ball FBGA Updated all the figures to branding guidelines. Updated the content, disclaimer and copyright year to align with the latest Infineon template.
*C	2025-05-07	Updated **Architecture block diagram**. Updated **Figure 4**.

Trademarks
All referenced product or service names and trademarks are the property of their respective owners.

Edition 2025-05-07

Published by

Infineon Technologies AG
81726 Munich, Germany

© 2025 Infineon Technologies AG.
All Rights Reserved.

Do you have a question about this document?

Email:

erratum@infineon.com

Document reference

002-33896 Rev. *C

IMPORTANT NOTICE
The information given in this document shall in no event be regarded as a guarantee of conditions or characteristics ("Beschaffenheitsgarantie").

With respect to any examples, hints or any typical values stated herein and/or any information regarding the application of the product, Infineon Technologies hereby disclaims any and all warranties and liabilities of any kind, including without limitation warranties of non-infringement of intellectual property rights of any third party.

In addition, any information given in this document is subject to customer's compliance with its obligations stated in this document and any applicable legal requirements, norms and standards concerning customer's products and any use of the product of Infineon Technologies in customer's applications.

The data contained in this document is exclusively intended for technically trained staff. It is the responsibility of customer's technical departments to evaluate the suitability of the product for the intended application and the completeness of the product information given in this document with respect to such application.

WARNINGS
Due to technical requirements products may contain dangerous substances. For information on the types in question please contact your nearest Infineon Technologies office.

Except as otherwise explicitly approved by Infineon Technologies in a written document signed by authorized representatives of Infineon Technologies, Infineon Technologies' products may not be used in any applications where a failure of the product or any consequences of the use thereof can reasonably be expected to result in personal injury.