OPTIREG™ TLF35584 PMIC for safety-relevant applications

October 2022

Copyright © Infineon Technologies AG 2022. All rights reserved.

The OPTIREG™ PMIC
An **integrated power supply** including system safety functions

Copyright © Infineon Technologies AG 2022. All rights reserved.

OPTIREG™ TLF35584 PMIC: System **power supply** and **safety functions integrated** into a **single package**

Copyright © Infineon Technologies AG 2022. All rights reserved.

OPTIREG™ TLF35584 PMIC
Functional safety applications

- Powertrain
  - Engine management
  - Transmission
  - Transfer case
  - Clutch actuator
  - Starter generator (e.g. ISG)

- xEV
  - Battery management
  - Traction Inverter
  - ...

- Chassis/ safety
  - Electric power steering
  - Electric steering column lock
  - Braking (e.g. brake booster)
  - Electric parking brake
  - Active suspension
  - Chassis control
  - Domain control
  - ADAS domain control
  - …

Copyright © Infineon Technologies AG 2022. All rights reserved.

OPTIREG™ TLF35584 PMIC supports **ASIL-D applications**, enabling **extended lifetime** in **harsh automotive environments**

Application examples

EDT/ xEV

Chassis & safety

Powertrain

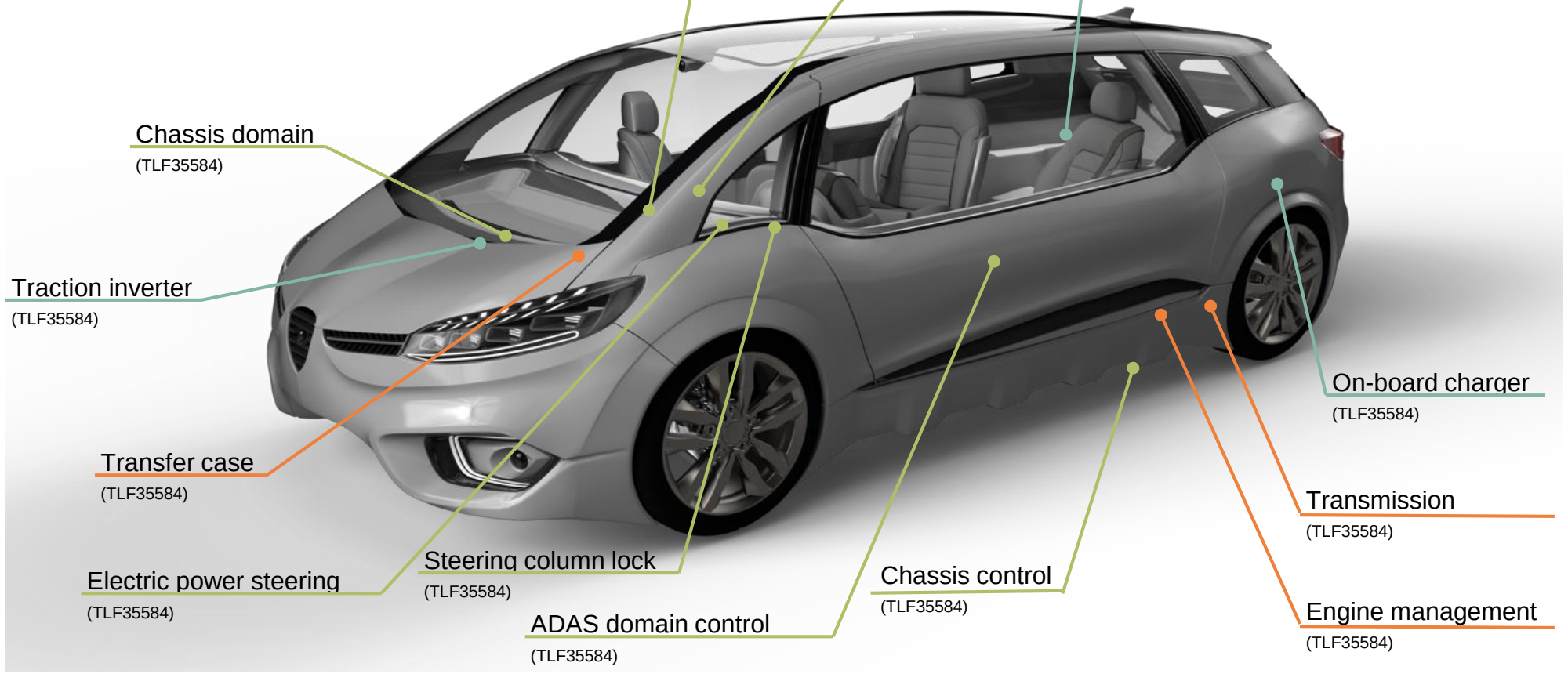

Copyright © Infineon Technologies AG 2022. All rights reserved.

OPTIREG™ PMIC together with OPTIREG™ TLF11251 for a **safe** and **optimized** multi-channel **power supply** of Infineon **µC families**

IFX offers a scalable PMIC portfolio which can cover the complete AURIX™ TC2x/TC3x portfolio

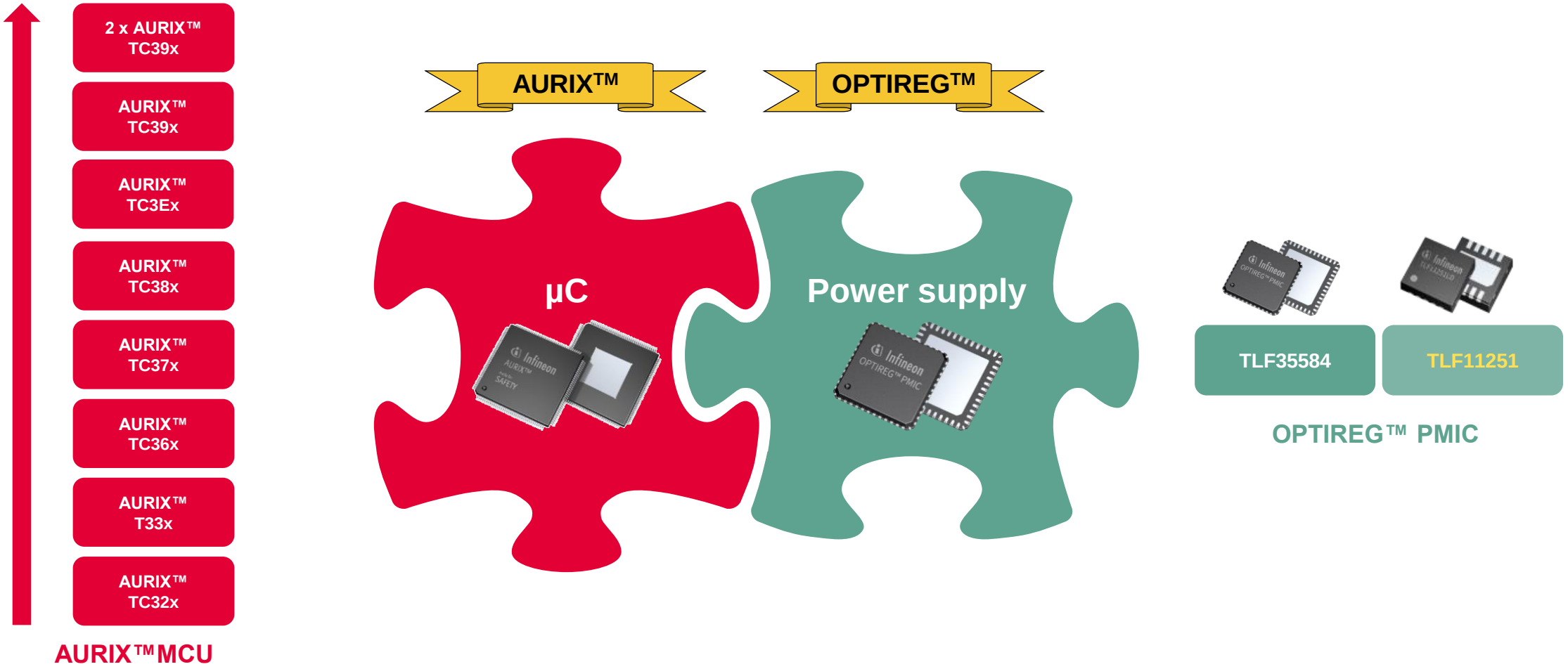

Copyright © Infineon Technologies AG 2022. All rights reserved.

TLF35584
OPTIREG™ PMIC Functional safety

Key features

- Buck/boost-pre-regulator
  - I_Q = 1.25 A; f: 300 kHz-2.5 MHz
- µC-Supply: 3.3 V/5 V @600 mA
- Reference-LDO: 5 V @150 mA (±1%)
- 2 x Tracker: 5 V @150 mA
- Communication-supply: 5 V @200 mA
- Stand-by-LDO: 3.3 V/5 V @10 mA
- Vin: 3 V .. 40 V

New Grade 0

PG-VQFN-48

PG-LQFP-64

Grade 1+

RoHS

AEC Qualified

- EN/ wake (T15 and CAN/ flexRay™)
- SPI
- Safety features
  - Multiple bandgap (supply vs V-monitoring)
  - UV/OV-monitoring, ERR-monitoring
  - Functional-WD & window-WD
  - Safe-state control, secondary safety path
  - Protected safety area
  - Built-in self-test (BIST)

ISO 26262 compliant

Application diagram

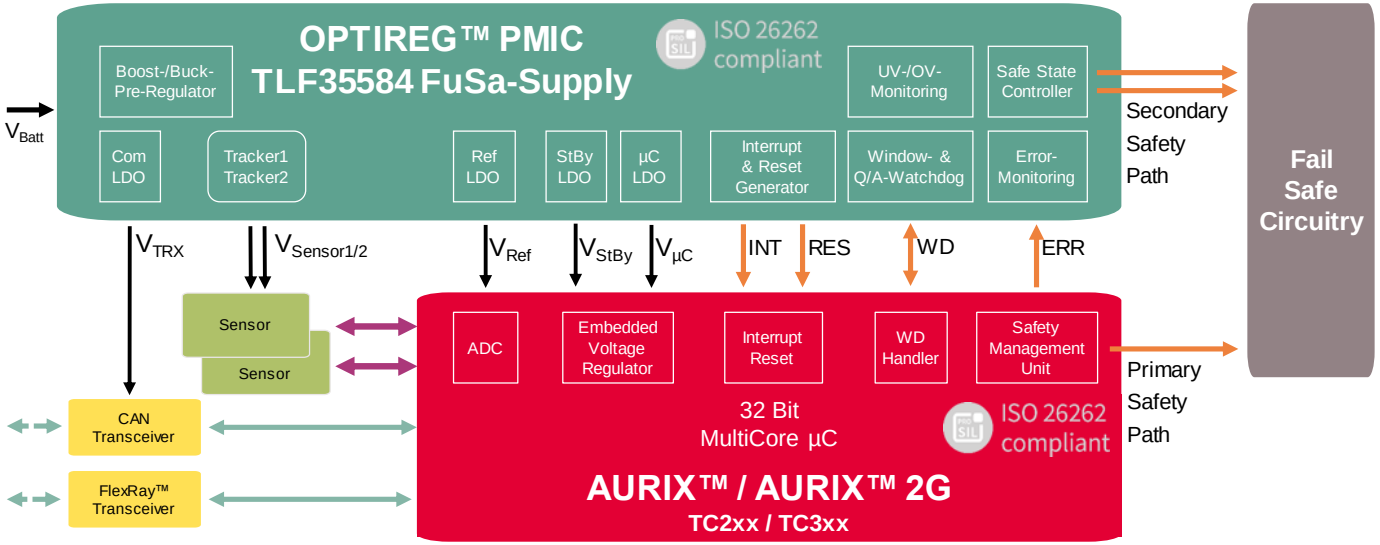

Applications

Powertrain

EDT

Chassis

Safety

Copyright © Infineon Technologies AG 2022. All rights reserved.

TLF35584QKV/VVSx
OPTIREG™ PMIC Functional safety

Key features

- Buck/boost-pre-regulator
  - I_Q = 1.25 A; f: 300 kHz-2.5 MHz
- µC-Supply: 3.3 V/5 V @600 mA
- Reference-LDO: 5 V @150 mA (±1%)
- 2 x Tracker: 5 V @150 mA
- Communication-supply: 5 V @200 mA
- Stand-by-LDO: 3.3 V/5 V @10 mA

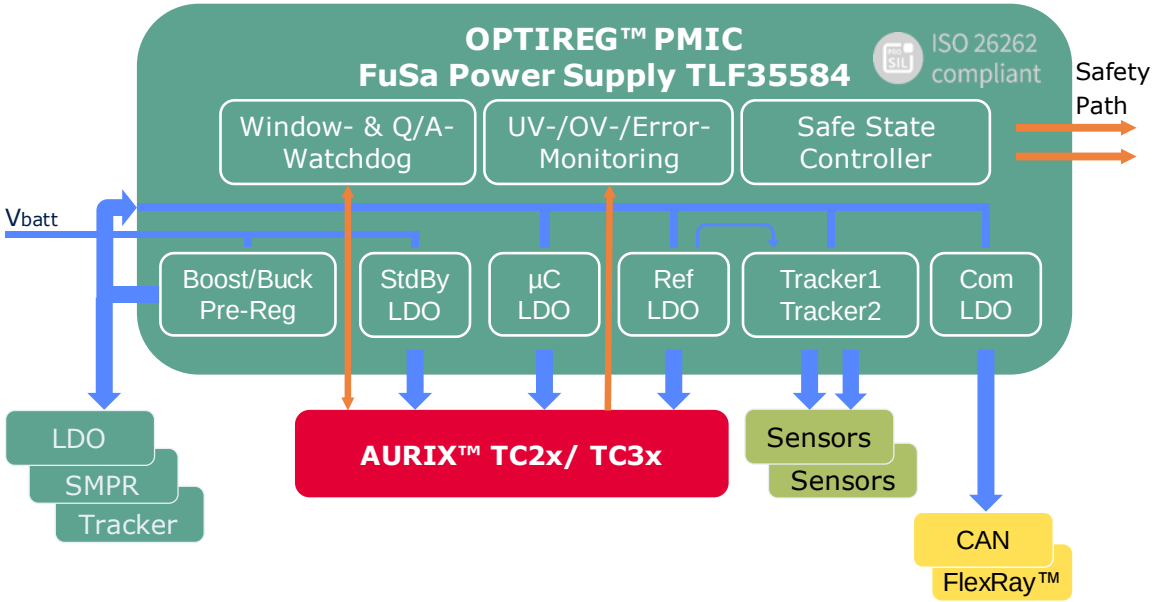

- EN/ wake (T15 and CAN/ flexRay™)
- SPI
- Safety features
  - Multiple bandgap (supply vs V-monitoring)
  - UV/OV-monitoring, ERR-monitoring
  - Functional-WD & window-WD
  - Safe-state control, secondary safety path
  - Protected safety area
  - Built-in self-test (BIST)
- Vin: 3 V .. 40 V

ISO 26262 compliant

Package

PG-VQFN-48

PG-LQFP-64

Grade 1+

AEC Qualified

RoHS

Copyright © Infineon Technologies AG 2022. All rights reserved.

TLF35584QVHSx
OPTIREG™ PMIC Functional safety

Key Features

- Buck/boost-pre-regulator
  - I_Q = 1.25 A; f: 300 kHz-2.5 MHz
- µC-Supply: 3.3 V/5 V @600 mA
- Reference-LDO: 5 V @150 mA (±1%)
- 2 x Tracker: 5 V @150 mA
- Communication-supply: 5 V @200 mA
- Stand-by-LDO: 3.3 V/5 V @10 mA

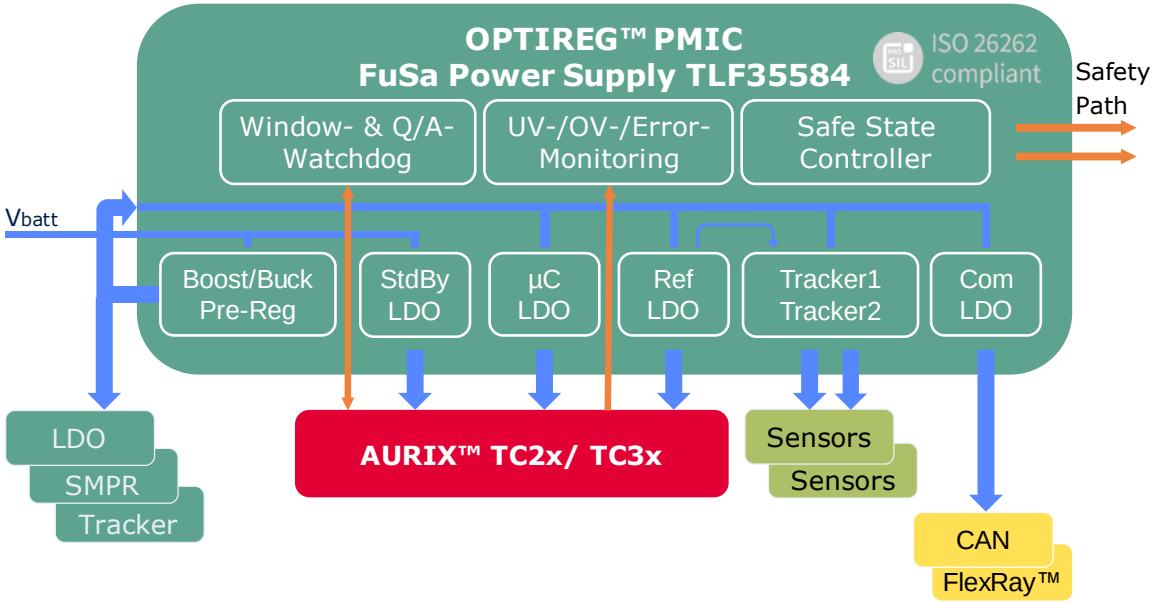

- EN/ wake (T15 and CAN/ flexRay™)
- SPI
- Safety features
  - Multiple bandgap (supply vs V-monitoring)
  - UV/OV-monitoring, ERR-monitoring
  - Functional-WD & window-WD
  - Safe-state control, secondary safety path
  - Protected safety area
  - Built-in self-test (BIST)
- Vin: 3 V .. 40 V

ISO 26262 compliant

Package

New Grade 0

- Leadless VQFN-48 for T_j > 150°C (AEC-Q100 Grade 0) is now available

PG-VQFN-48

AEC Qualified

RoHS

Copyright © Infineon Technologies AG 2022. All rights reserved.

OPTIREG™ TLF35584 PMIC **Functional safety** to **supply the AURIX™** microcontroller and the **other loads** of your system

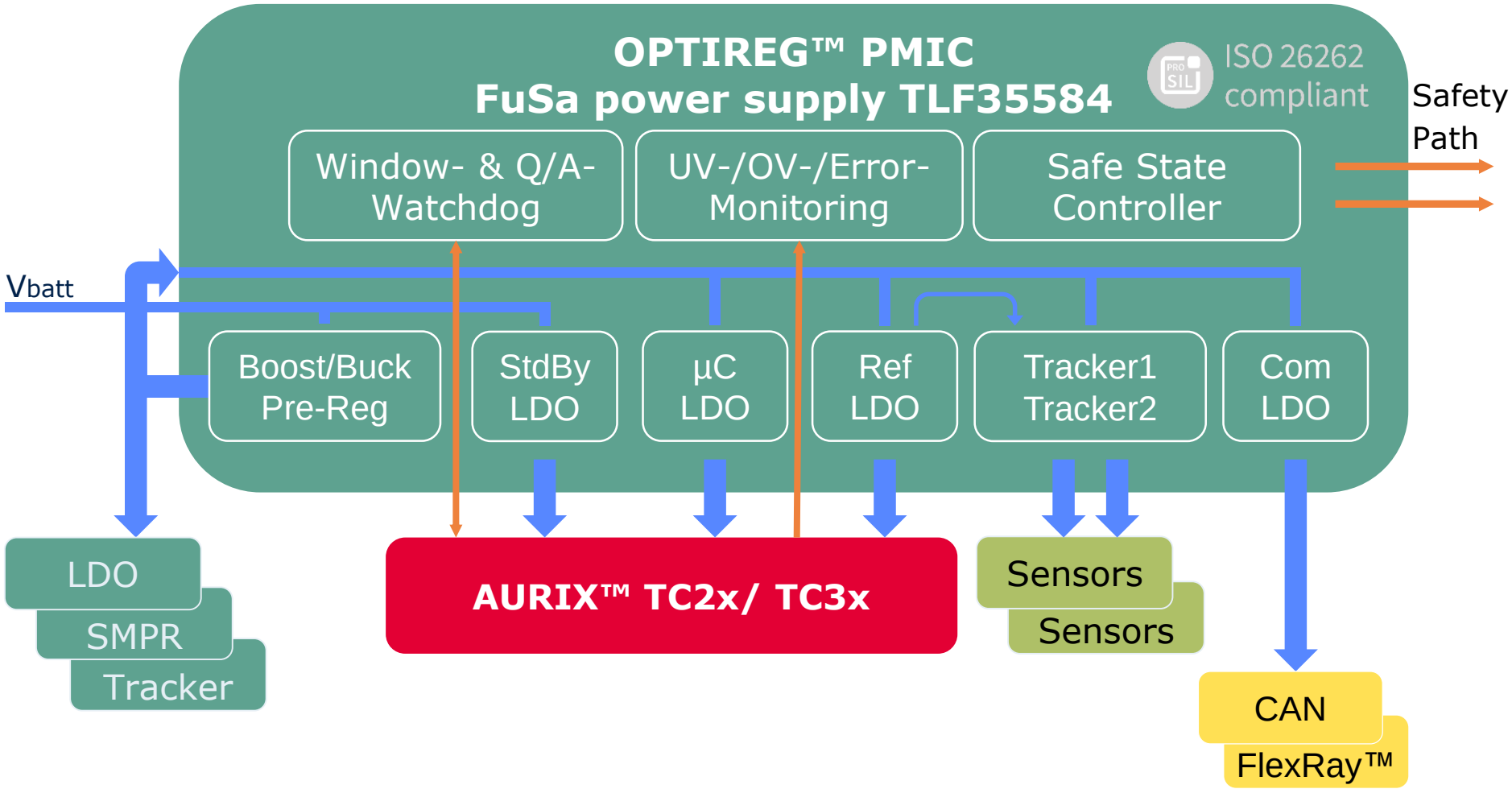

Copyright © Infineon Technologies AG 2022. All rights reserved.

OPTIREG™ TLF35584 PMIC Functional safety
Features - benefits

Features	Benefits
ISO 26262-compliant	Usage in applications with ASIL-requirement
Boost capability	Ensure operation in cold cranking condition
Pre-/Post-Regulator architecture	High efficiency
Multiple voltage supplies	System supply: µC, communication, sensors
Dedicated reference voltage supply	ADC-supply independent of µC-load
Bandgap for both safety and supply plus electrical isolation	Avoid common cause failures
WWD & Q/A-WD	Flexible WD to achieve proper ASIL-level
BIST (analog & logic)	Ensuring “safe” operation
UV/OV-monitoring	Flexible RESET/interrupt management
Flexible safe state control	Ensuring “safe” operation
Enable/ wake	Flexible wake-up management

Copyright © Infineon Technologies AG 2022. All rights reserved.

AURIX™ microcontroller & OPTIREG™ PMIC teaming up for Functional Safety in the focus automotive applications

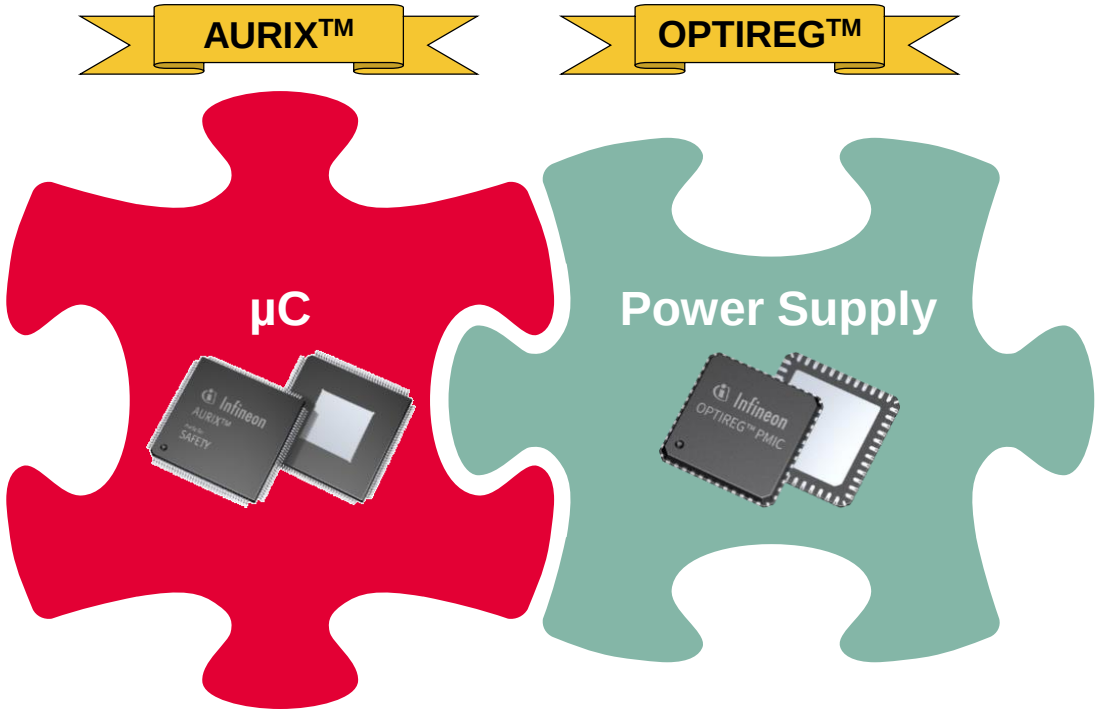

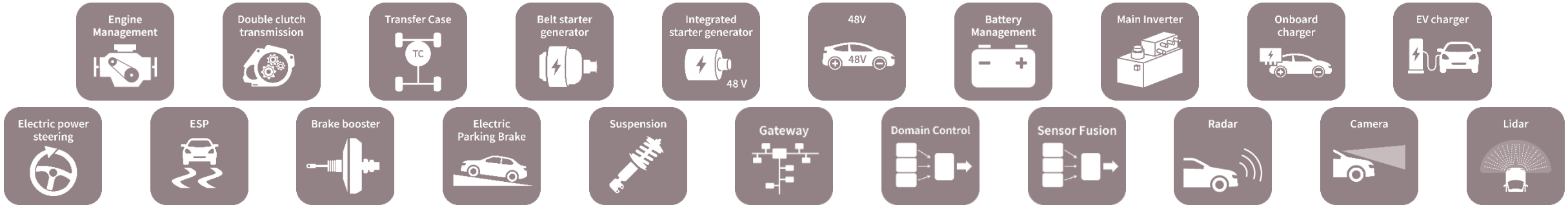

Copyright © Infineon Technologies AG 2022. All rights reserved.

OPTIREG™ PMIC **powers up** your automotive system while **supervising the microcontroller** and the power supply

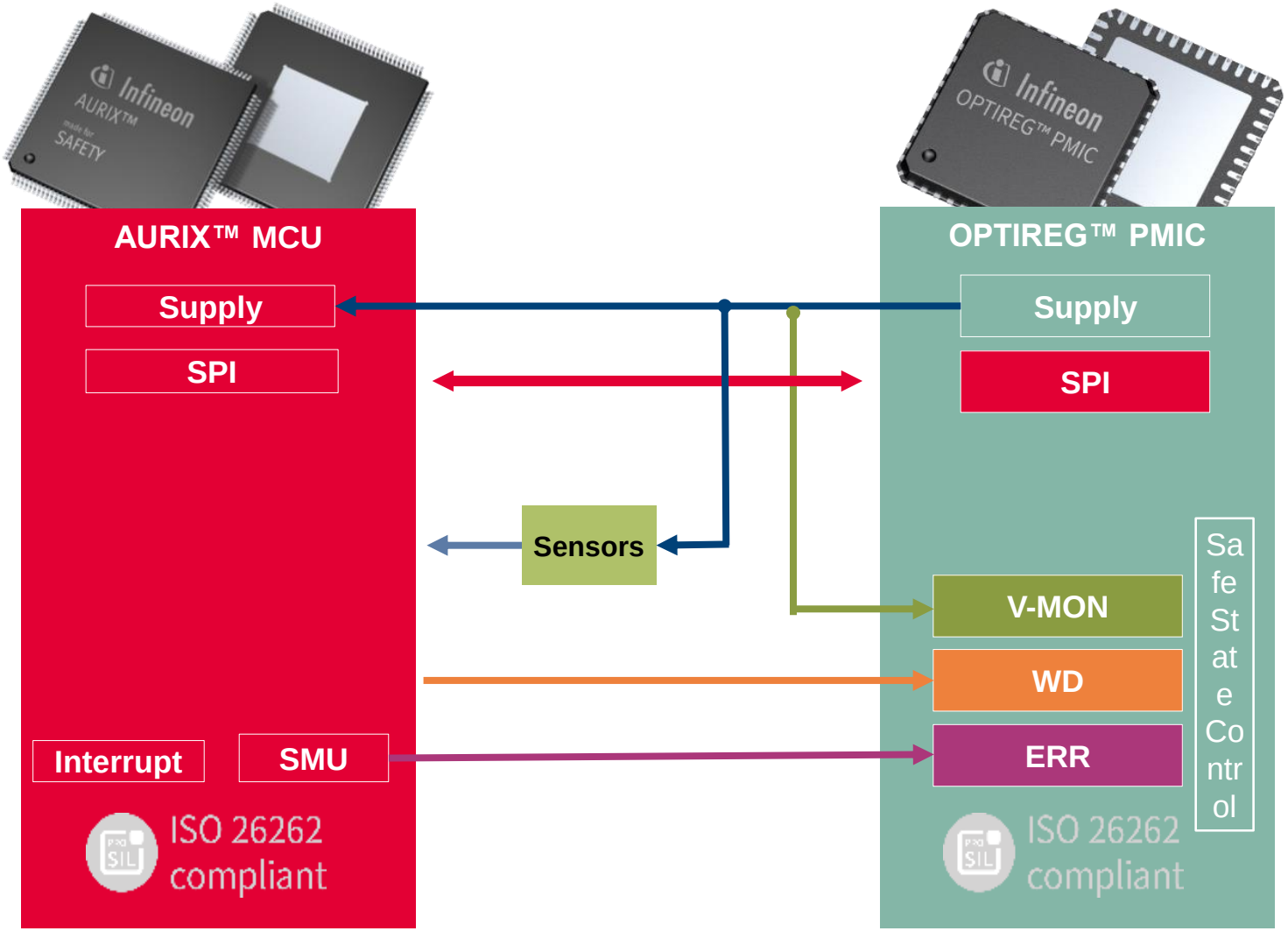

PMIC internal

- Internal supplies
- SPI error
- Thermal sensors
- BIST

Voltage Monitoring

- Over voltage
- Under voltage
- Over current

Watchdog

- Timing error
- Software execution error

Error monitor

- React on MCU alarm

Copyright © Infineon Technologies AG 2022. All rights reserved.

OPTIREG™ PMIC Functional safety genesis of safety requirements

- OPTIREG™ PMICs have been defined based on AURIX™ requirements for external monitoring
- Those requirements have then been extended to support also other MCUs.
  - Choice between different types of flexible watchdogs (Window- & functional-watchdogs)
  - Ability to monitor MCU core supply
- OPTIREG™ PMICs are developed as safety element out of context (SEooC) supporting ASIL-D acc. ISO 26262:2018

ISO 26262 compliant

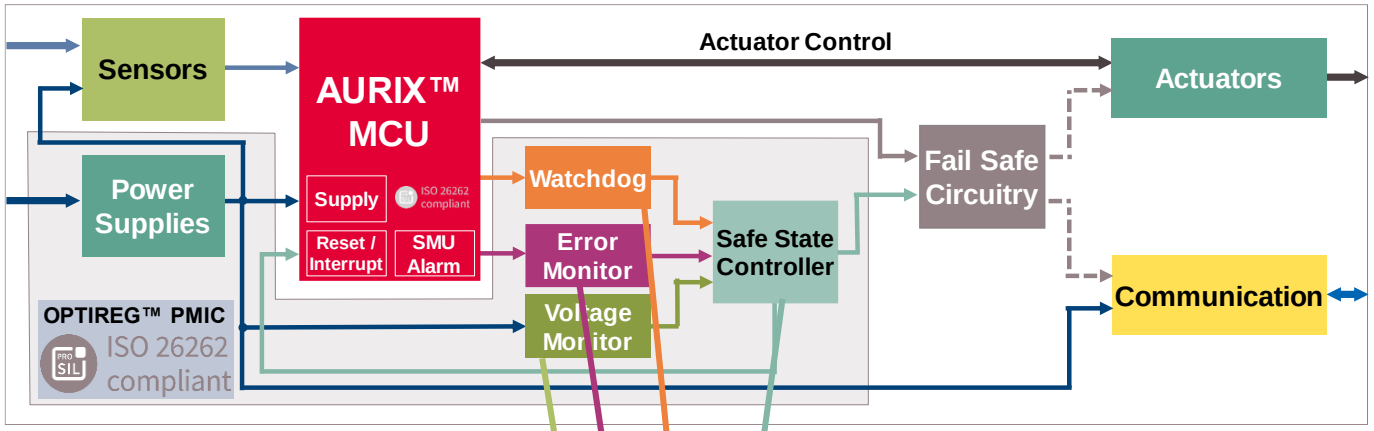

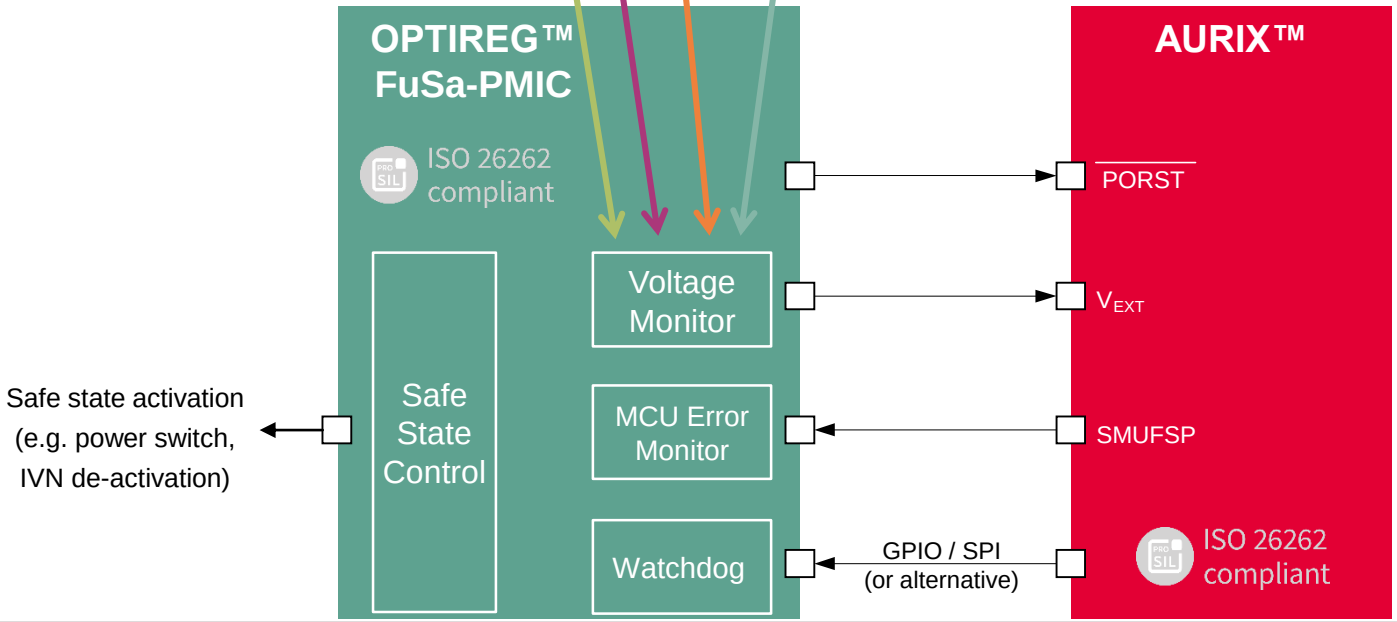

Copyright © Infineon Technologies AG 2022. All rights reserved.

OPTIREG™ TLF35584 PMIC

Infineon's OPTIREG™ TLF35584 PMIC provides robust, safe and reliable supply for AURIX™ microcontrollers up to TC3x for a dependable system with the highest functional safety demand

TLF35584QKVSx

- PG-LQFP-64
- S1 (5.0V), S2 (3.3V)
- Tj: -40°C .. 150°C
- Grade 1+
- 12 mm x 12 mm
- Development acc. ISO 26262 Safety standard

TLF35584QVVSx

- PG-VQFN-48
- S1 (5.0V), S2 (3.3V)
- Tj: -40°C .. 150°C
- Grade 1
- 7 mm x 7 mm
- Lead-tip inspection
- Development acc. ISO 26262 Safety standard

TLF35584QVHSx

New

- PG-VQFN-48
- S1 (5.0V), S2 (3.3V)
- **Tj: -40°C .. 175°C**
- **Grade 0+**
- 7 mm x 7 mm
- Lead-tip inspection
- Development acc. ISO 26262 Safety standard

OPTIREG™

PMIC

OPTIREG™ TLF35584 PMIC Functional safety
General information

› General

- PG-VQFN-48
  - As TLF35584**QV**
  - With lead-tip-inspection
  - Footprint: 7 mm x 7 mm
  - Pitch: 0.5
- PG-LQFP-64
  - As TLF35584**QK**
  - Footprint: 12 mm x 12 mm
  - Pitch: 0.5

RoHS

AEC Qualified

- Vin: 3 V .. 40 V
  (60V with rise time >10 ms)
- Tj: -40°C .. 150°C , up to 175°C with QFN
  (extension to be checked on request acc. customer's load/temperature-profile for PG-LQFP-64)
- Development acc. ISO 26262:2018 safety standard

PRO SIL ISO 26262 compliant

Sales Name	Package	LDO1	Stanby-LDO	LDO2	Tracker 1 & 2	Ref.-LDO
TLF35584QVVS1	PG-VQFN-48	5V	5V	5V	5V	5V
TLF35584QVVS2	PG-VQFN-48	3.3V	3.3V	5V	5V	5V
TLF35584QKVS1	PG-LQFP-64	5V	5V	5V	5V	5V
TLF35584QKVS2	PG-LQFP-64	3.3V	3.3V	5V	5V	5V
TLF35584QVHS1	PG-VQFN-48	5V	5V	5V	5V	5V
TLF35584QVHS2	PG-VQFN-48	3.3V	3.3V	5V	5V	5V

Copyright © Infineon Technologies AG 2022. All rights reserved.

OPTIREG™ TLF35584 PMIC
Variants: PG-VQFN-48-31

Sales name	TLF35584QVVS1		TLF35584QVVS2	
Design step	C13	C14	C13	C14
Design-in preference	**Not for new designs!**	Preferred!	**Not for new designs!**	Preferred!
Order-number	SP001096170	SP001657934	SP001096172	SP001657936
OPN	TLF35584QVVS1 XUMA1	TLF35584QVVS1 XUMA2	TLF35584QVVS2 XUMA1	TLF35584QVVS2 XUMA2
Marking line1	TLF35584	35584	TLF35584	35584
Marking line2	VS1	VS1	VS2	VS2
Package	PG-VQFN-48		PG-VQFN-48	
µC-supply	5V		3.3V	
Standby-supply	5V		3.3V	
Reference-regulator	5V		5V	
Communication-supply	5V		5V	
Sensor-supplies	5V		5V	

Copyright © Infineon Technologies AG 2022. All rights reserved.

OPTIREG™ TLF35584 PMIC
Variants: PG-VQFN-48-79

Sales name	TLF35584QVHS1	TLF35584QVHS2
Design step	C14	C14
Design-In preference	Preferred !	Preferred !
Order-number	SP005429284	SP005429285
OPN	TLF35584QVHS1XUMA1	TLF35584QVHS2XUMA1
Marking line1	TLF35584	TLF35584
Marking line2	HS1	HS2
Package	PG-VQFN-48	PG-VQFN-48
µC-supply	5V	3.3V
Standby-supply	5V	3.3V
Reference-regulator	5V	5V
Communication-supply	5V	5V
Sensor-supplies	5V	5V

Copyright © Infineon Technologies AG 2022. All rights reserved.

OPTIREG™ TLF35584 PMIC
Variants: PG-LQFP-64-13

Sales name	TLF35584QKVS1	TLF35584QKVS2
Order-number (C14-step)	SP001613988	SP001613990
OPN	TLF35584QKVS1XUMA2	TLF35584QKVS2XUMA2
Package	PG-LQFP-64	PG-LQFP-64
Marking line1	TLF35584	TLF35584
Marking line2	QK VS1	QK VS2
µC-supply	5V	3.3V
Standby-supply	5V	3.3V
Reference-Regulator	5V	5V
Communication-supply	5V	5V
Sensor-supplies	5V	5V

Copyright © Infineon Technologies AG 2022. All rights reserved.

OPTIREG™ TLF35584 PMIC
Learn more about OPTIREG™ PMICs support material

Collaterals and Brochures

- Product briefs
- Selection guides
- Application brochures
- Presentations
- Press releases

TLF35584QKVS1 Webpage

TLF35584QVHS1 Webpage

TLF35584QVVS1 Webpage

TLF35584QKVS2 Webpage

TLF35584QVHS2 Webpage

TLF35584QVVS2 Webpage

Technical Material

- Application notes
- Technical articles
- Simulation models
- Datasheets, MCDS Files
- PCB Design Data

Datasheet*

Technical Material*

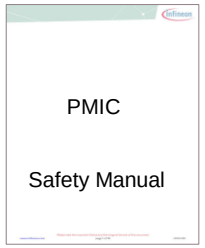

Evaluation Boards

- Evaluation boards
- Demoboards
- Reference designs

TLF35584 MC Board

PMIC Boards

TLF35584QVVS1 Board

TLF35584QVVS2 Board

Evaluation Board

Companion Board

AURIX™

Further Info

- Technical videos
- Product videos

- Why Infineon's OPTIREG™ PMIC family is relevant for safety-related automotive applications (E1)
- ATV: OPTIREG™ PMIC - Technical safety requirements and goals (E2)

* Accessible only via myICP

Copyright © Infineon Technologies AG 2022. All rights reserved.

OPTIREG™ TLF35584 PMIC
Tools & Software

Prototype (design) → Purchase (order)

OPTIREG™ PMIC

Learn how to integrate AURIX™ TC3xx microcontrollers with Infineon system power supplies of the TLF family and check out existing HW

- Application Note*
- Triboard Manuals *

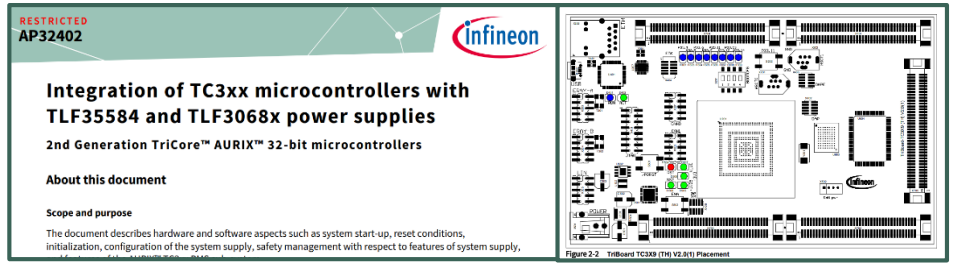

Find out more on AURIX™ support

Get software support from the wide partners ecosystem of Infineon

- Hitex SafeTpack TC3x
- Vector vSBC
- AURIX ™ SafeTlibTC2x

More info on the power supply partners

* myICP Access required

Copyright © Infineon Technologies AG 2022. All rights reserved.

OEMs/ Tier1s can skip one step in the manufacturing

Providing a solder-able sidewall on lead tip of the VQFN leadless package to enable automated optical inspection (AOI)

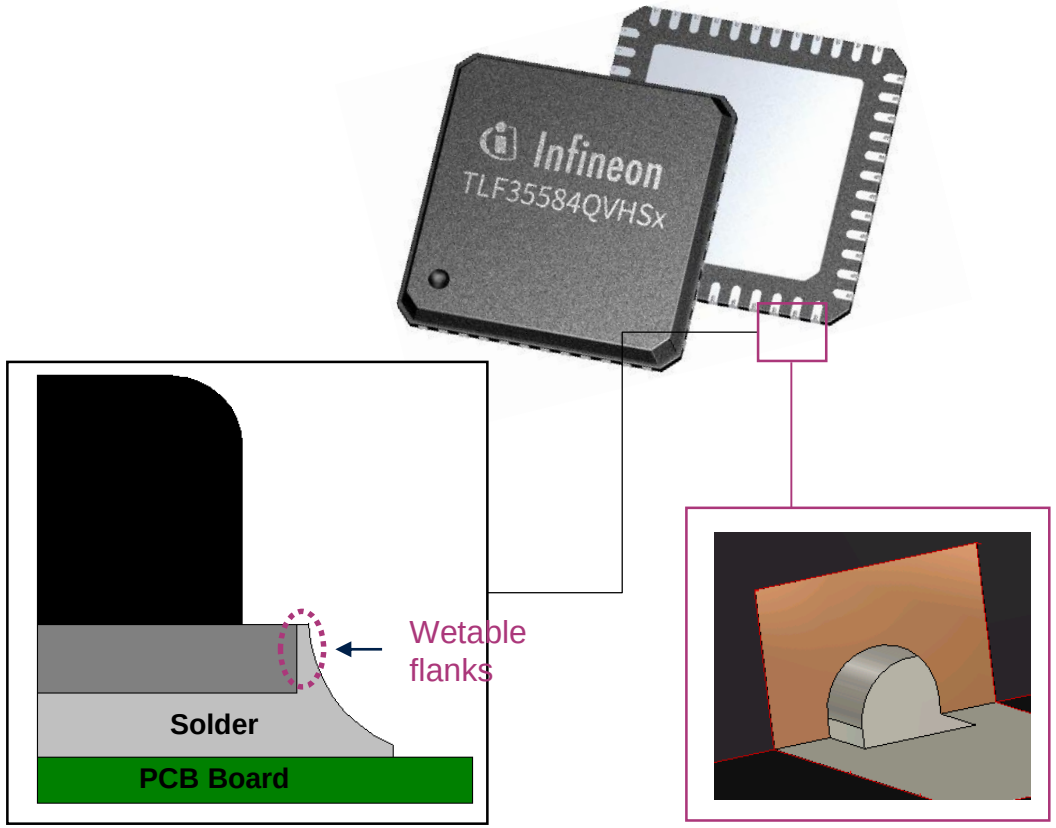

Copyright © Infineon Technologies AG 2022. All rights reserved.

Part of your life. Part of tomorrow.