Bipolar Hall Latch

High Precision Automotive Bipolar Hall Effect Latch

TLE4961-5M

SP001013854

TLE4961-5M

Data Sheet

Revision 1.2, 2019-12-20

Sense & Control

Table of contents

Table of contents 2

List of tables 3

List of figures 4

1 Product description 5
1.1 Overview 5
1.2 Features 5
1.3 Target applications 6
1.4 Product validation 6

2 Functional description 7
2.1 General 7
2.2 Pin configuration (top view) 7
2.3 Pin description 7
2.4 Block diagram 8
2.5 Functional block description 9
2.6 Default start-up behavior 10

3 Specification 11
3.1 Application circuit 11
3.2 Absolute maximum ratings 12
3.3 Operating range 13
3.4 Electrical and magnetic characteristics 14
3.5 Electro magnetic compatibility 16

4 Package information 18
4.1 Package outline PG-SOT23-3-15 18
4.2 Packing information PG-SOT23-3-15 18
4.3 Footprint PG-SOT23-3-15 19
4.4 PG-SOT23-3-15 distance between chip and package 19
4.5 Package marking 19

5 Graphs of the magnetic parameters 20

6 Graphs of the electrical parameters 21

7 Revision history 26

List of tables

Table 1 Ordering information 5
Table 2 Pin description PG-SOT23-3-15 7
Table 3 Absolute maximum rating parameters 12
Table 4 ESD protection (T_A = 25°C) 13
Table 5 Operating conditions parameters 13
Table 6 General electrical characteristics 14
Table 7 Magnetic characteristics 15
Table 8 Magnetic compatibility 16
Table 9 Electro magnetic compatibility 17

List of figures

Figure 1 TLE4961-5M in the PG-SOT23-3-15 package . . . 5
Figure 2 Pin configuration and center of sensitive area . . . 7
Figure 3 Functional block diagram TLE4961-5M . . . 8
Figure 4 Timing diagram TLE4961-5M . . . 9
Figure 5 Output signal TLE4961-5M . . . 9
Figure 6 Start-up behavior of the TLE4961-5M . . . 10
Figure 7 Basic application circuit #1: only pull-up resistor is necessary . . . 11
Figure 8 Enhanced application circuit #2: for extended ESD robustness . . . 11
Figure 9 Definition of magnetic field direction PG-SOT23-3-15 . . . 15
Figure 10 EMC test circuit . . . 16
Figure 11 PG-SOT23-3-15 package outline (all dimensions in mm) . . . 18
Figure 12 Packing of the PG-SOT23-3-15 in a tape . . . 18
Figure 13 Footprint PG-SOT23-3-15 . . . 19
Figure 14 Distance between chip and package . . . 19
Figure 15 Marking of TLE4961-5M . . . 19
Figure 16 Operating point (B_{OP}) of the TLE4961-5M over temperature . . . 20
Figure 17 Release point (B_{RP}) of the TLE4961-5M over temperature . . . 20
Figure 18 Hysteresis (B_{Hys}) of the TLE4961-5M over temperature . . . 20
Figure 19 Power on time t_{PON} of the TLE4961-5M over temperature . . . 21
Figure 20 Signal delay time of the TLE4961-5M over temperature . . . 21
Figure 21 Supply current of the TLE4961-5M over temperature . . . 21
Figure 22 Supply current of the TLE4961-5M over supply voltage . . . 22
Figure 23 Output current limit of the TLE4961-5M over temperature . . . 22
Figure 24 Output current limit of the TLE4961-5M over applied pull-up voltage . . . 22
Figure 25 Output fall time of the TLE4961-5M over temperature . . . 23
Figure 26 Output fall time of the TLE4961-5M over applied pull-up voltage . . . 23
Figure 27 Output rise time of the TLE4961-5M over temperature . . . 23
Figure 28 Output rise time of the TLE4961-5M over applied pull-up voltage . . . 24
Figure 29 Output leakage current of the TLE4961-5M over temperature . . . 24
Figure 30 Saturation voltage of the TLE4961-5M over temperature . . . 24
Figure 31 Saturation voltage of the TLE4961-5M over output current . . . 25
Figure 32 Effective noise of the TLE4961-5M thresholds over temperature . . . 25
Figure 33 Output signal jitter of the TLE4961-5M over temperature . . . 25

1 Product description

1.1 Overview

Characteristic	Supply Voltage	Supply Current	Sensitivity	Interface	Temperature
Bipolar Hall Effect Latch	3.0 V ~ 32 V	1.6 mA	Medium B_{OP}: 15 mT B_{RP}: -15 mT	Open Drain Output	-40°C to 170°C

Figure 1 TLE4961-5M in the PG-SOT23-3-15 package

1.2 Features

- 3.0 V to 32 V operating supply voltage
- Operation from unregulated power supply
- Reverse polarity protection (-18 V)
- Overvoltage capability up to 42 V without external resistor
- Output overcurrent and overtemperature protection
- Active error compensation
- High stability of magnetic thresholds
- Low jitter (typ. 0.35 µs)
- High ESD performance
- Small SMD package PG-SOT23-3-15

Table 1 Ordering information

Product name	Product type	Ordering code	Package
TLE4961-5M	Bipolar Hall Latch	SP001013854	PG-SOT23-3-15

1.3 Target applications

Target applications for the TLE496x Hall Latch family are all applications which require a high precision Hall Latch with an operating temperature range from -40°C to 170°C. Its superior supply voltage range from 3.0 V to 32 V with overvoltage capability (e.g. load-dump) up to 42 V without external resistor makes it ideally suited for automotive and industrial applications.

The TLE4961-5M is a latch with a typical threshold of 15 mT. It is ideally suited for applications with a pole wheel for index counting and speed measurement.

1.4 Product validation

Qualified for automotive applications. Product validation according to AEC-Q100.

2 Functional description

2.1 General

The TLE4961-5M is an integrated Hall effect latch designed specifically for highly accurate applications with superior supply voltage capability, operating temperature range and temperature stability of the magnetic thresholds.

2.2 Pin configuration (top view)

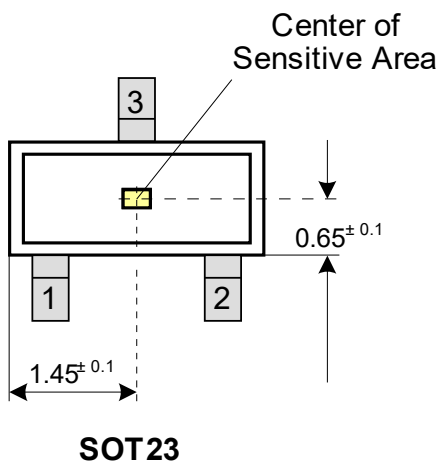

Figure 2 **Pin configuration and center of sensitive area**

2.3 Pin description

Table 2 **Pin description PG-SOT23-3-15**

Pin no.	Symbol	Function
1	VDD	Supply voltage
2	Q	Output
3	GND	Ground

2.4 Block diagram

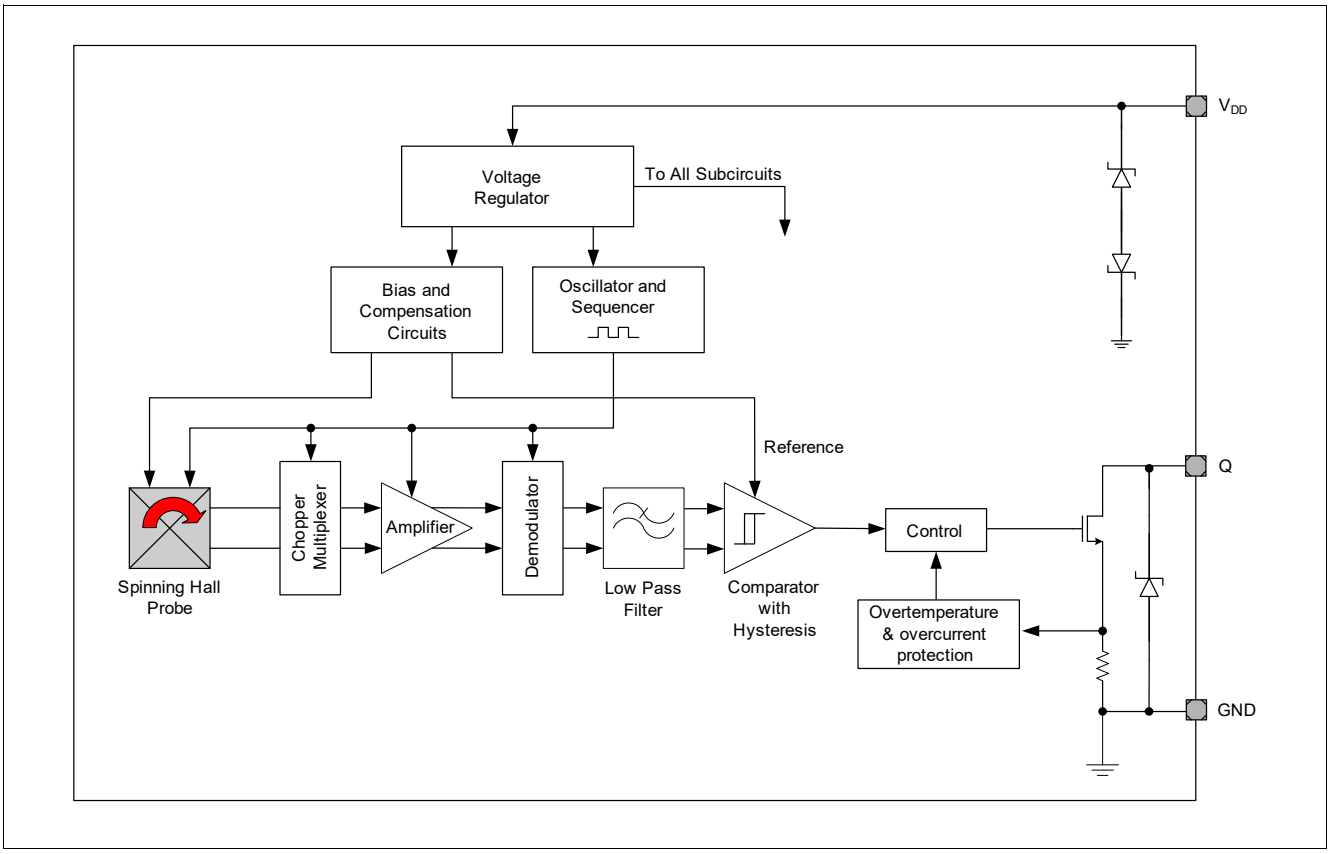

Figure 3 Functional block diagram TLE4961-5M

2.5 Functional block description

The chopped Hall IC switch comprises a Hall probe, bias generator, compensation circuits, oscillator and output transistor.

The bias generator provides currents for the Hall probe and the active circuits. Compensation circuits stabilize the temperature behavior and reduce influence of technology variations.

The active error compensation (chopping technique) rejects offsets in the signal path and the influence of mechanical stress to the Hall probe caused by molding and soldering processes and other thermal stress in the package. The chopped measurement principle together with the threshold generator and the comparator ensures highly accurate and temperature stable magnetic thresholds.

The output transistor has an integrated overcurrent and overtemperature protection.

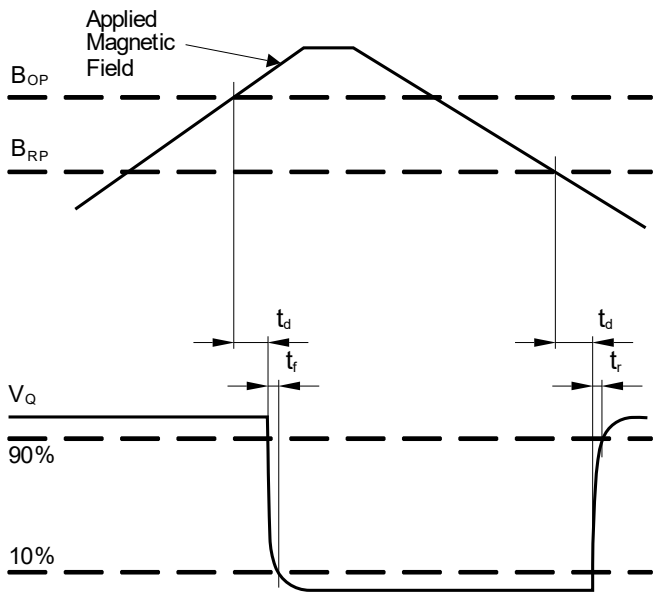

Figure 4 Timing diagram TLE4961-5M

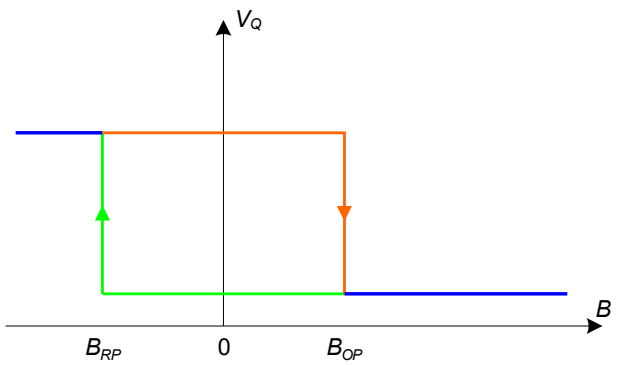

Figure 5 Output signal TLE4961-5M

2.6 Default start-up behavior

The magnetic thresholds exhibit a hysteresis $B_{HYS} = B_{OP} - B_{RP}$. In case of a power-on with a magnetic field B within hysteresis ($B_{OP} > B > B_{RP}$) the output of the sensor is set to the pull up voltage level (V_Q) per default. After the first crossing of B_{OP} or B_{RP} of the magnetic field the internal decision logic is set to the corresponding magnetic input value.

V_{DDA} is the internal supply voltage which is following the external supply voltage V_{DD}.

This means for $B > B_{OP}$ the output is switching, for $B < B_{RP}$ and $B_{OP} > B > B_{RP}$ the output stays at V_Q.

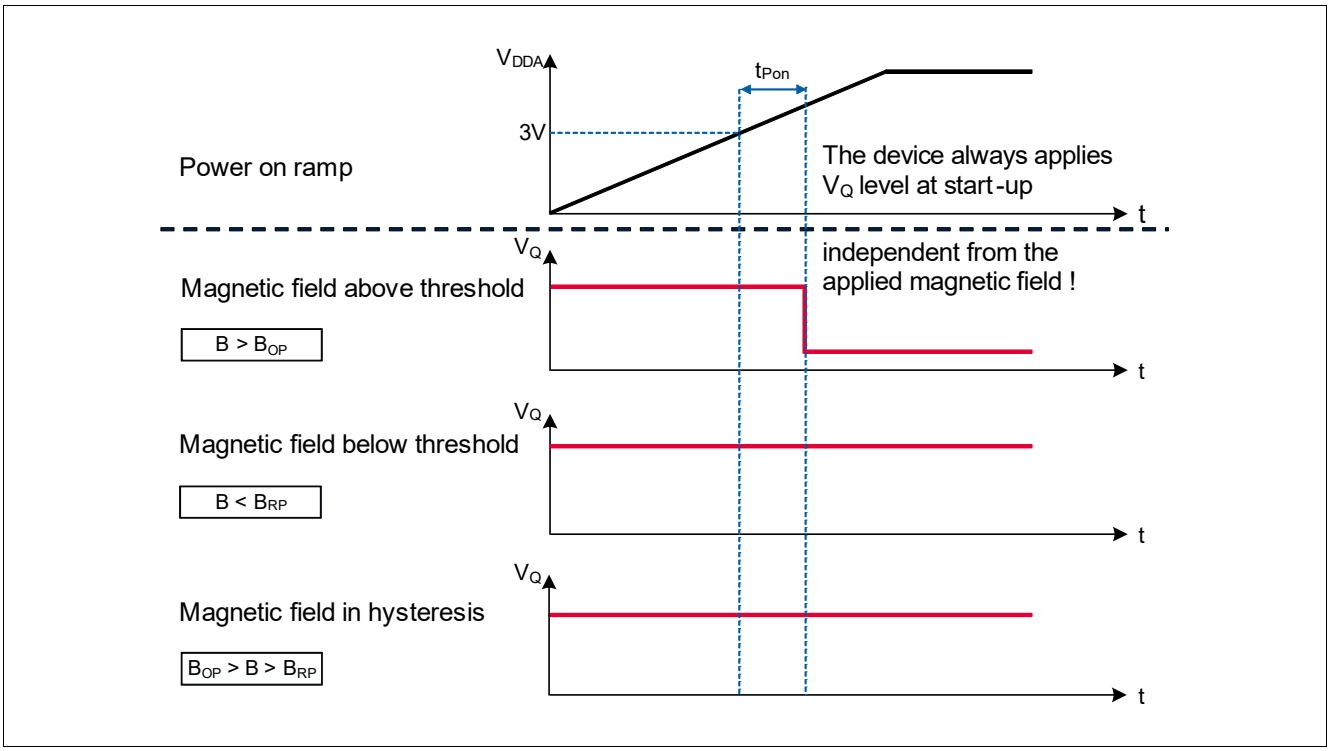

Figure 6 Start-up behavior of the TLE4961-5M

3 Specification

3.1 Application circuit

The following **Figure 7** shows the basic option of an application circuit. Only a pull-up resistor R_Q is necessary. An external series resistor for V_S is not needed. The resistor R_Q has to be in a dimension to match the applied V_S to keep I_Q limited to the operating range of maximum 25 mA.

e.g.: V_S = 12 V and R_Q = 1200 Ω gives I_Q = 12 V/1200 Ω = 10 mA

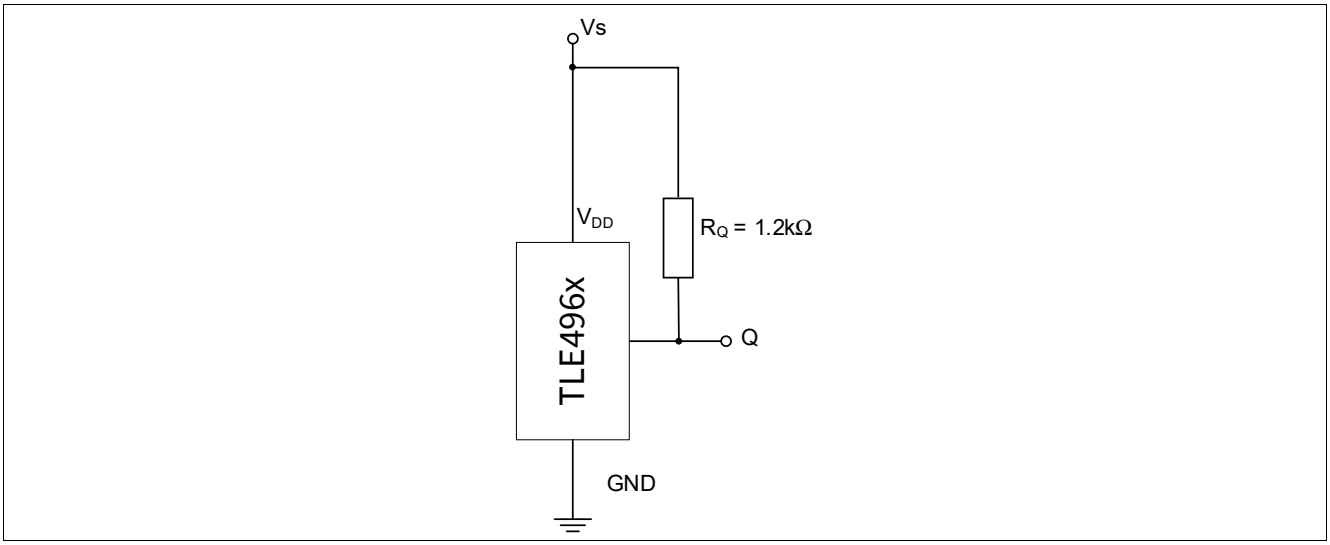

Figure 7 Basic application circuit #1: only pull-up resistor is necessary

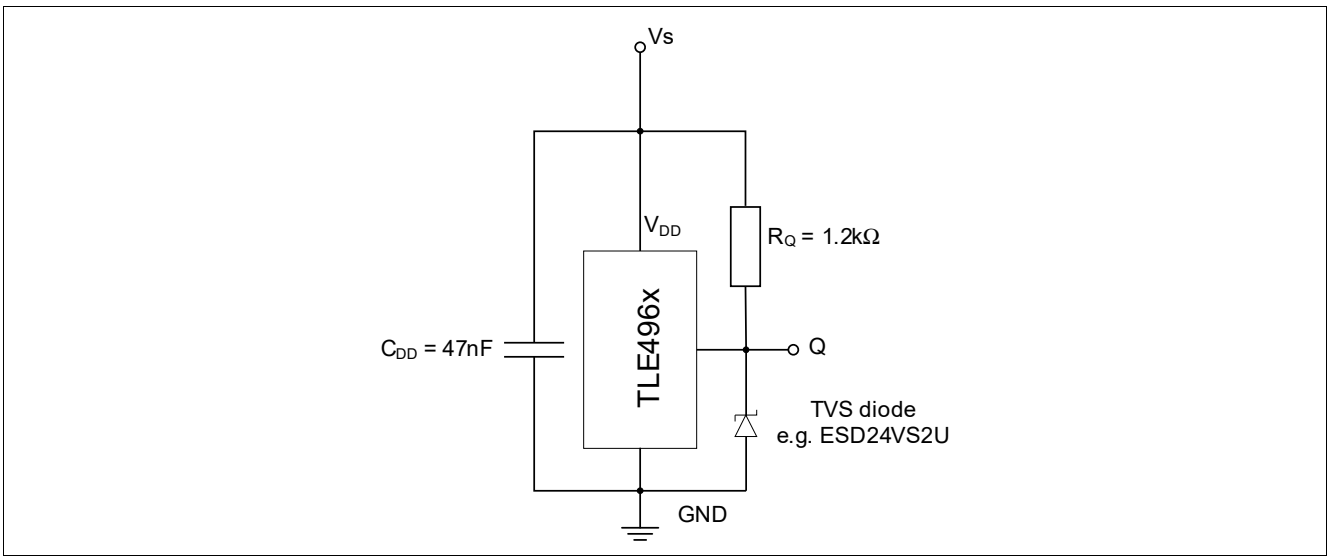

Figure 8 Enhanced application circuit #2: for extended ESD robustness

With an additional capacitor C_{DD} and a transient voltage suppression (TVS) diode an extended ESD robustness of 15 kV on system level is achieved (**Figure 8**). If an increased robustness for e.g. testpulse 1 is required, a serial resistor in the supply needs to be added (see also **Chapter 3.5**).

3.2 Absolute maximum ratings

Table 3 Absolute maximum rating parameters

Parameter	Symbol	Values			Unit	Note or Test Condition
		Min.	Typ.	Max.		
Supply voltage[1)]	V_{DD}	-18	–	32 42	V	– 10h, no external resistor required
Output voltage	V_Q	-0.5	–	32	V	–
Reverse output current	I_Q	-70	–	–	mA	–
Junction temperature[1)]	T_J	-40	–	155 165 175 195	°C	for 2000h (not additive) for 1000h (not additive) for 168h (not additive) for 3 x 1h (additive)
Storage temperature	T_S	-40	–	150	°C	–
Thermal resistance Junction ambient	R_{thJA}	–	–	300	K/W	for PG-SOT23-3-15 (2s2p)
Thermal resistance Junction lead	R_{thJL}	–	–	100	K/W	for PG-SOT23-3-15

1) This lifetime statement is an anticipation based on an extrapolation of Infineon's qualification test results. The actual lifetime of a component depends on its form of application and type of use etc. and may deviate from such statement. The lifetime statement shall in no event extend the agreed warranty period.

Attention: ***Stresses above the max. values listed here may cause permanent damage to the device. Exposure to absolute maximum rating conditions for extended periods may affect device reliability. Maximum ratings are absolute ratings; exceeding only one of these values may cause irreversible damage to the integrated circuit.***

Calculation of the dissipated power P_{DIS} and junction temperature T_J of the chip (SOT23 example):
e.g. for: V_{DD} = 12 V, I_S = 2.5 mA, V_{QSAT} = 0.5 V, I_Q = 20 mA
Power dissipation: P_{DIS} = 12 V x 2.5 mA + 0.5 V x 20 mA = 30 mW + 10 mW = 40 mW
Temperature $\Delta T = R_{thJA} \times P_{DIS}$ = 300 K/W x 40 mW = 12 K
For T_A = 150°C: $T_J = T_A + \Delta T$ = 150°C + 12 K = 162°C

Table 4 ESD protection[1] (T_A = 25°C)

Parameter	Symbol	Values			Unit	Note or Test Condition
		Min.	Typ.	Max.		
ESD voltage (HBM)[2]	V_{ESD}	-7	–	7	kV	R = 1.5 kΩ, C = 100 pF
ESD voltage (CDM)[3]	V_{ESD}	-1	–	1	kV	–
ESD voltage (system level)[4]	V_{ESD}	-15	–	15	kV	with circuit shown in **Figure 7** and **Figure 8**

1) Characterization of ESD is carried out on a sample basis, not subject to production test.
2) Human Body Model (HBM) tests according to ANSI/ESDA/JEDEC JS-001.
3) Charge device model (CDM) tests according to JESD22-C101.
4) Gun test (2 kΩ / 330 pF or 330 Ω / 150 pF) according to ISO 10605-2008.

3.3 Operating range

The following operating conditions must not be exceeded in order to ensure correct operation of the TLE4961-5M.

All parameters specified in the following sections refer to these operating conditions unless otherwise mentioned.

The maximum tested magnetic field is 600 mT.

Table 5 Operating conditions parameters

Parameter	Symbol	Values			Unit	Note or Test Condition
		Min.	Typ.	Max.		
Supply voltage	V_{DD}	3.0	–	32[1]	V	–
Output voltage	V_Q	-0.3	–	32	V	–
Junction temperature	T_J	-40	–	170	°C	–
Output current	I_Q	0	–	25	mA	–
Magnetic signal input frequency[2]	f_{SW}	0	–	10	kHz	–

1) Latch-up test with factor 1.5 is not covered. Please see max ratings also.
2) For operation at the maximum switching frequency the magnetic input signal must be 1.4 times higher than for static fields.This is due to the -3 dB corner frequency of the internal low-pass filter in the signal path.

3.4 Electrical and magnetic characteristics

Product characteristics involve the spread of values guaranteed within the specified voltage and ambient temperature range. Typical characteristics are the median of the production and correspond to V_{DD} = 12 V and T_A = 25°C. The below listed specification is valid in combination with the application circuit shown in **Figure 7** and **Figure 8**.

Table 6 General electrical characteristics

Parameter	Symbol	Values			Unit	Note or Test Condition
		Min.	Typ.	Max.		
Supply current	I_S	1.1	1.6	2.5	mA	–
Reverse current	I_{SR}	–	0.05	1	mA	for V_{DD} = -18 V
Output saturation voltage	V_{QSAT}	–	0.2	0.5	V	I_Q = 20 mA
		–	0.24	0.6	V	I_Q = 25 mA
Output leakage current	I_{QLEAK}	–	–	10	µA	–
Output current limitation	I_{QLIMIT}	30	56	70	mA	internally limited and thermal shutdown
Output fall time[1)]	t_f	0.17	0.4	1	µs	1.2 kΩ / 50 pF, see **Figure 4**
Output rise time[1)]	t_r	0.4	0.5	1	µs	1.2 kΩ / 50 pF, see **Figure 4**
Output jitter[1)2)]	t_{QJ}	–	0.35	1	µs	for square wave signal with 1 kHz
Delay time[1)3)]	t_d	12	15	30	µs	see **Figure 4**
Power-on time[1)4)]	t_{PON}	–	80	150	µs	V_{DD} = 3 V, $B \le B_{RP}$ - 0.5 mT or $B \ge B_{OP}$ + 0.5 mT
Chopper frequency[1)]	f_{OSC}	–	350		kHz	–

1) Not subject to production test, verified by design/characterization.
2) Output jitter is the 1 σ value of the output switching distribution.
3) Systematic delay between magnetic threshold reached and output switching.
4) Time from applying V_{DD} = 3.0 V to the sensor until the output is valid.

Table 7 Magnetic characteristics

Parameter	Symbol	T (°C)	Values			Unit	Note / Test Condition
			Min.	Typ.	Max.		
Operating point	B_{OP}	-40	11.7	17.0	22.2	mT	–
		25	10.3	15.0	19.8		
		170	7.0	10.7	14.3		
Release point	B_{RP}	-40	-22.2	-17.0	-11.7	mT	–
		25	-19.8	-15.0	-10.3		
		170	-14.3	-10.7	-7.0		
Hysteresis	B_{HYS}	-40	25.4	33.9	42.4	mT	–
		25	22.5	30.0	37.5		
		170	16.0	21.3	26.6		
Effective noise value of the magnetic switching points[1)]	B_{Neff}	25	–	62	–	µT	–
Temperature compensation of magnetic thresholds[2)]	T_C	–	–	-2000	–	ppm/K	–

1) The magnetic noise is normal distributed and can be assumed as nearly independent to frequency without sampling noise or digital noise effects. The typical value represents the rms-value and corresponds therefore to a 1 σ probability of normal distribution. Consequently a 3 σ value corresponds to 99.7% probability of appearance.

2) Not subject to production test, verified by design/characterization.

Field direction definition

Positive magnetic fields are defined with the south pole of the magnet to the branded side of package.

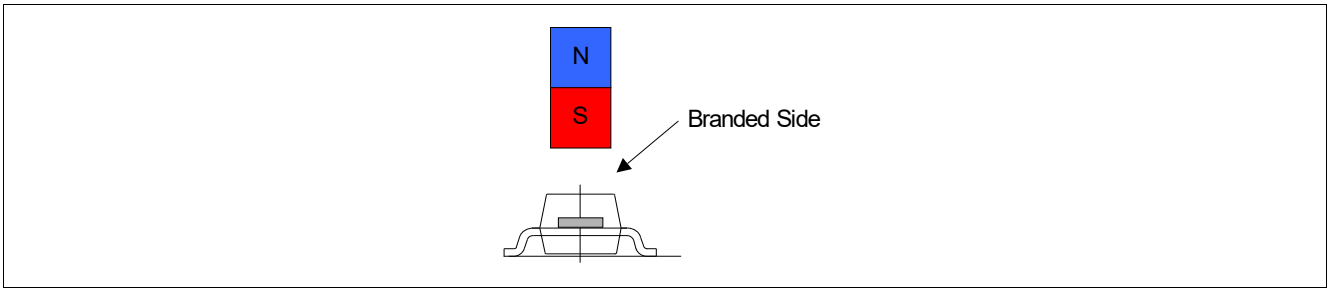

Figure 9 Definition of magnetic field direction PG-SOT23-3-15

3.5 Electro magnetic compatibility

Characterization of electro magnetic compatibility is carried out on a sample basis from one qualification lot. Not all specification parameters have been monitored during EMC exposure.

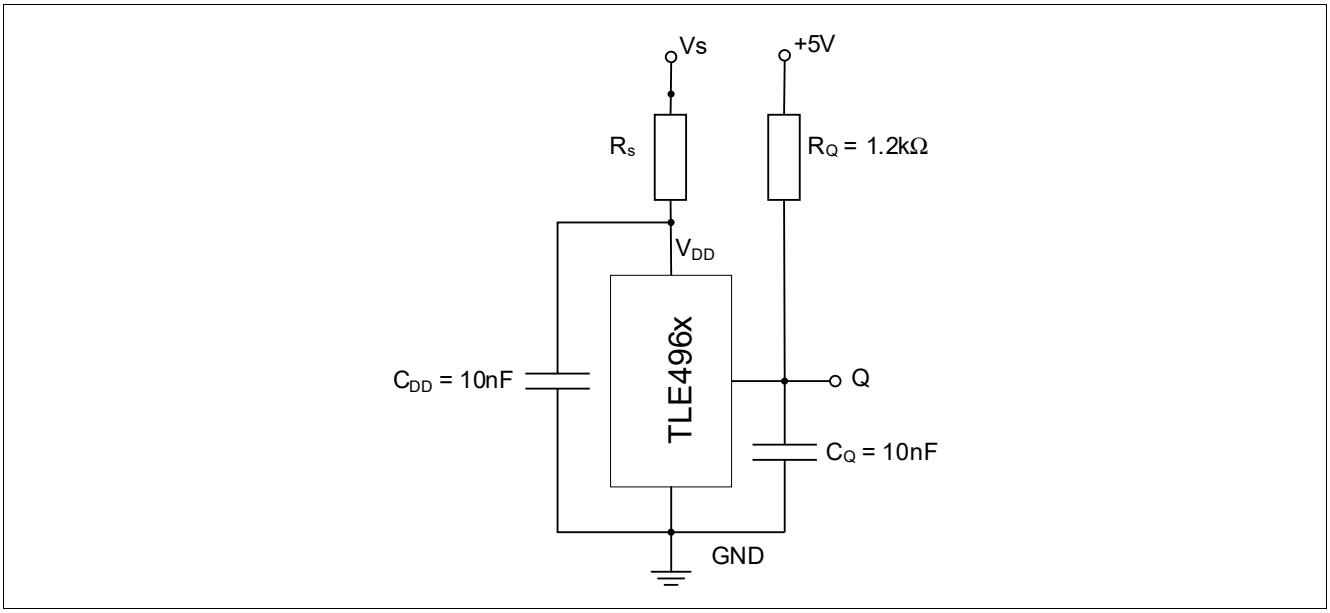

Figure 10 EMC test circuit

Ref: ISO 7637-2 (Version 2004), test circuit **Figure 10** (with external resistor, R_S = 100 Ω)

Table 8 Magnetic compatibility

Parameter	Symbol	Level / Type	Status
Testpulse 1	V_{EMC}	-100 V	C
Testpulse 2a[1)]		60 V/110 V	A/C
Testpulse 2b		10 V	C
Testpulse 3a		-150 V	A
Testpulse 3b		100 V	A
Testpulse 4[2)]		-7 V / -5.5 V	A
Testpulse 5b[3)]		U_S = 86.5 V / U_S* = 28.5 V	A

1) ISO 7637-2 (2004) describes internal resistance = 2 Ω (former 10 Ω).
2) According to 7637-2 for test pulse 4 the test voltage shall be 12 V ±0.2 V.
3) A central load dump protection of 42 V is used. U_s* = 42 V - 13.5 V.

Ref: ISO 7637-2 (Version 2004), test circuit **Figure 10** (without external resistor, R_S = 0 Ω)

Table 9 Electro magnetic compatibility

Parameter	Symbol	Level / Type	Status
Testpulse 1	V_{EMC}	-50 V	C
Testpulse 2a[1)]		50 V	A
Testpulse 2b		10 V	C
Testpulse 3a		-150 V	A
Testpulse 3b		100 V	A
Testpulse 4[2)]		-7 V / 5.5 V	A
Testpulse 5b[3)]		U_S = 86.5 V / U_S* = 28.5 V	A

1) ISO 7637-2 (2004) describes internal resistance = 2 Ω (former 10 Ω).

2) According to 7637-2 for test pulse 4 the test voltage shall be 12 V ±0.2 V.

3) A central load dump protection of 42 V is used. U_s* = 42 V - 13.5 V.

4 Package information

The TLE4961-5M is available in the small halogen-free SMD package PG-SOT23-3-15.

4.1 Package outline PG-SOT23-3-15

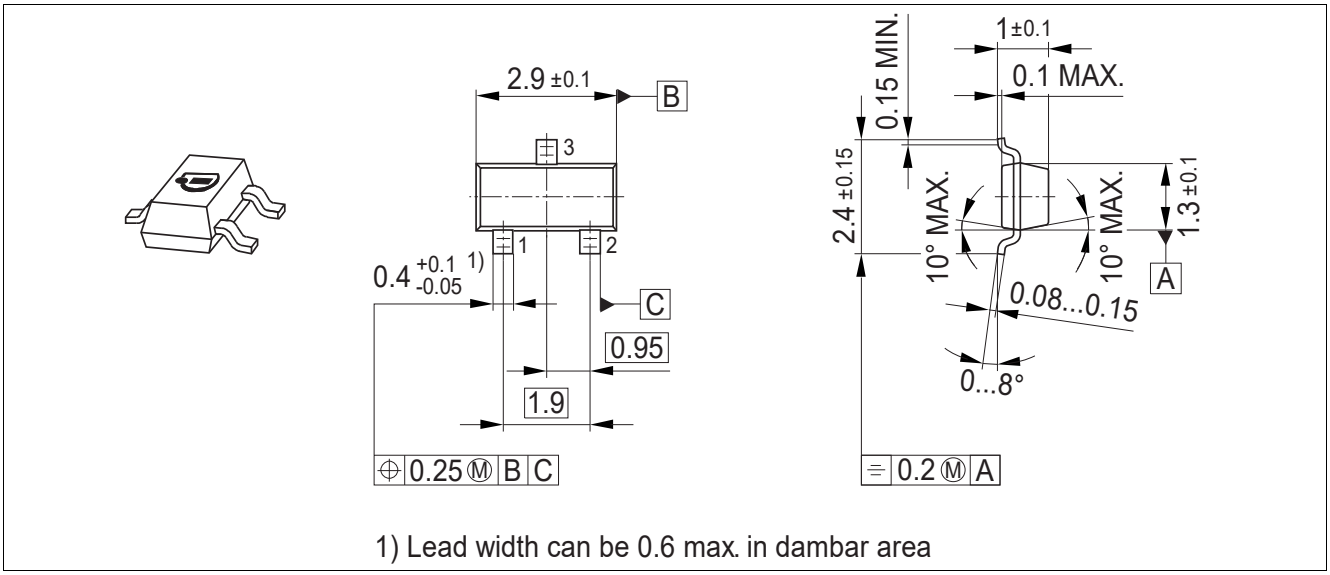

Figure 11 PG-SOT23-3-15 package outline (all dimensions in mm)

4.2 Packing information PG-SOT23-3-15

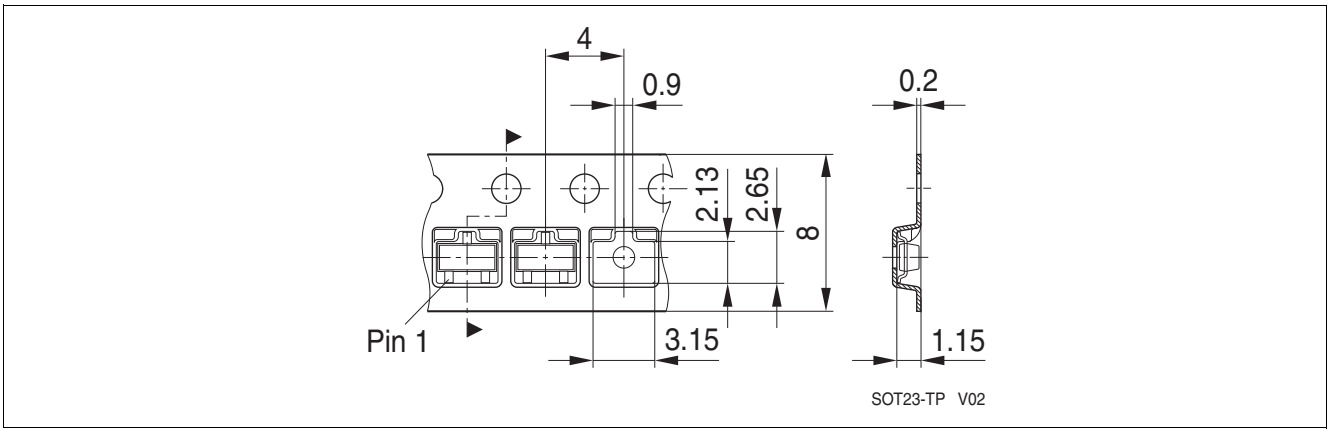

Figure 12 Packing of the PG-SOT23-3-15 in a tape

4.3 Footprint PG-SOT23-3-15

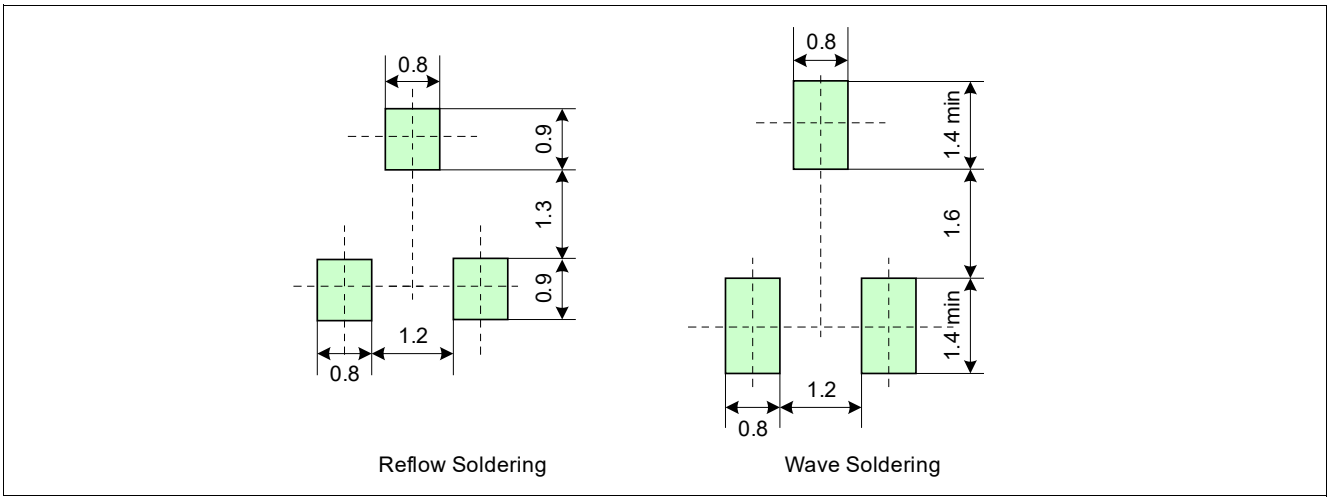

Figure 13 Footprint PG-SOT23-3-15

4.4 PG-SOT23-3-15 distance between chip and package

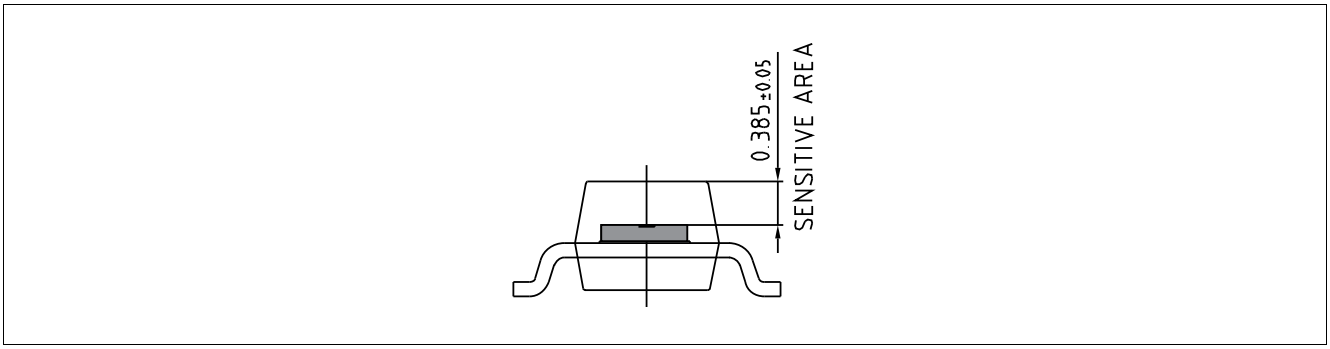

Figure 14 Distance between chip and package

4.5 Package marking

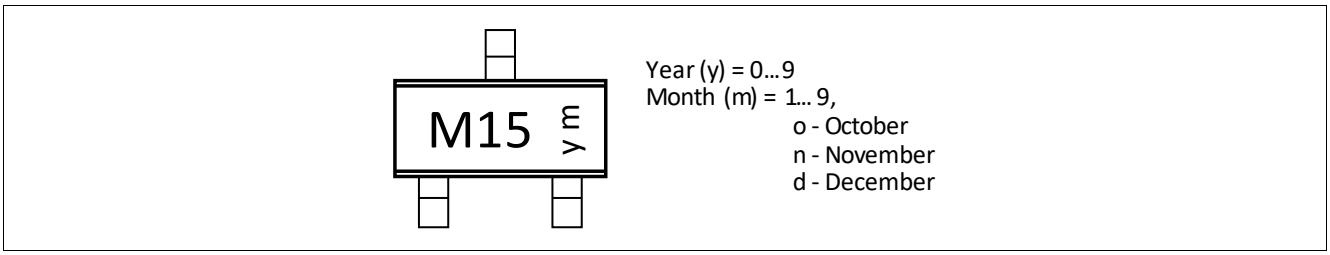

Figure 15 Marking of TLE4961-5M

5 Graphs of the magnetic parameters

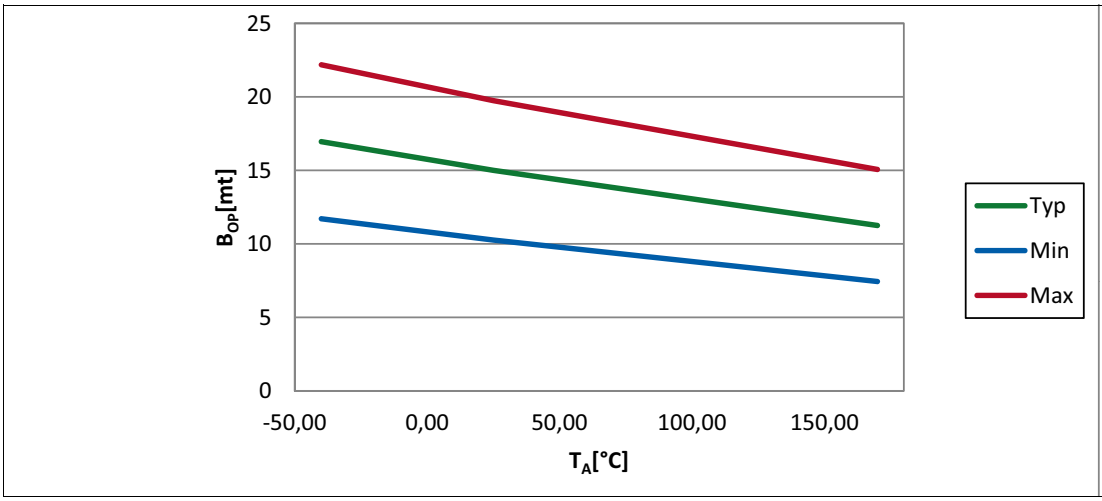

Figure 16 Operating point (B_{OP}) of the TLE4961-5M over temperature

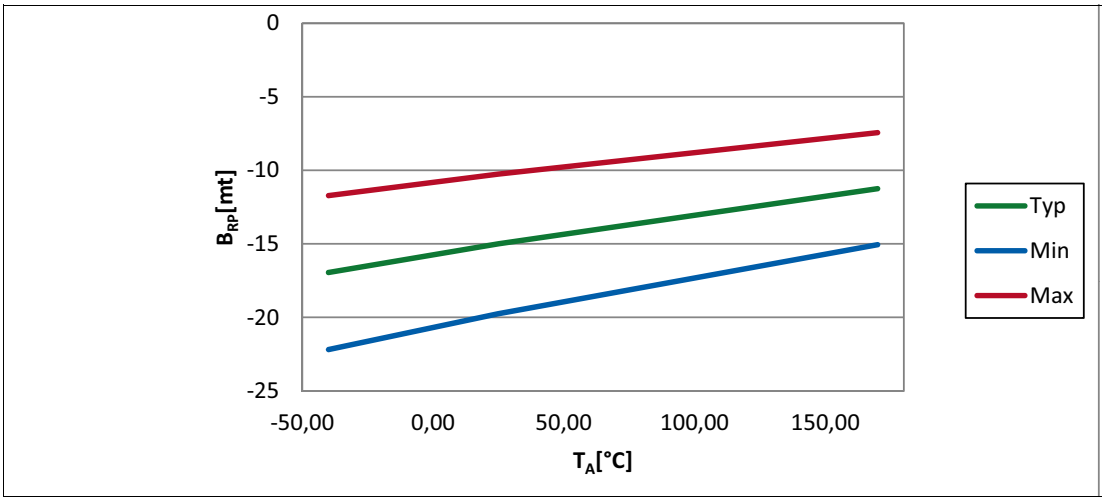

Figure 17 Release point (B_{RP}) of the TLE4961-5M over temperature

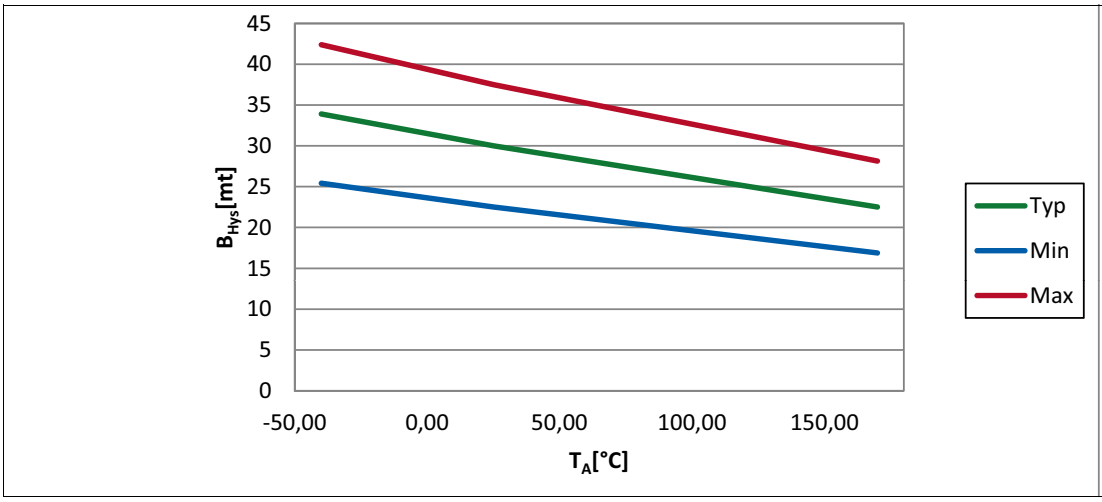

Figure 18 Hysteresis (B_{Hys}) of the TLE4961-5M over temperature

6 Graphs of the electrical parameters

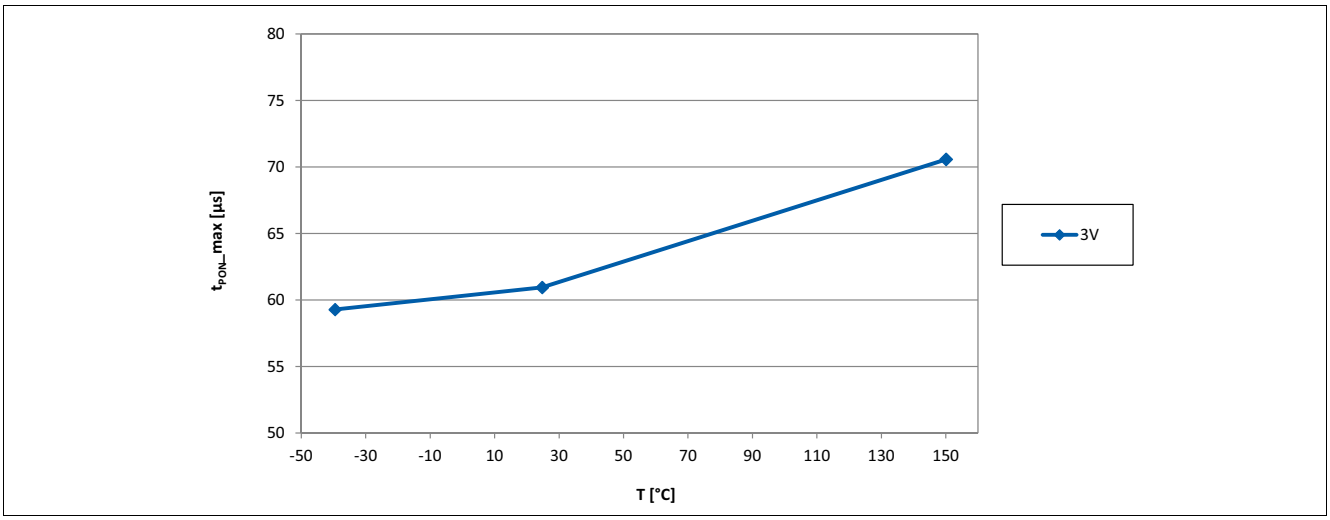

Figure 19 Power on time t_{PON} of the TLE4961-5M over temperature

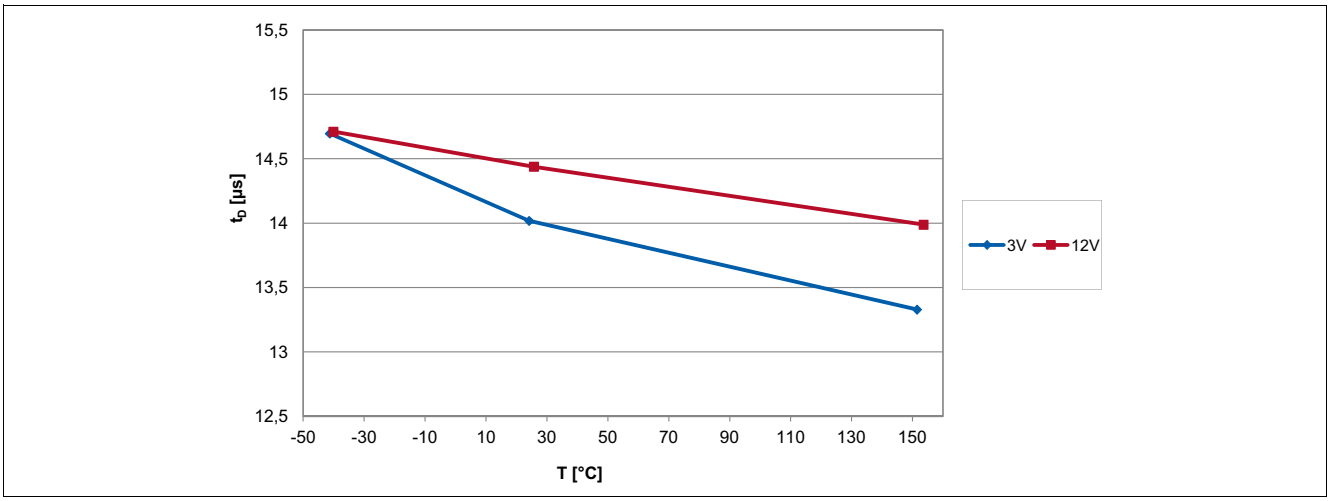

Figure 20 Signal delay time of the TLE4961-5M over temperature

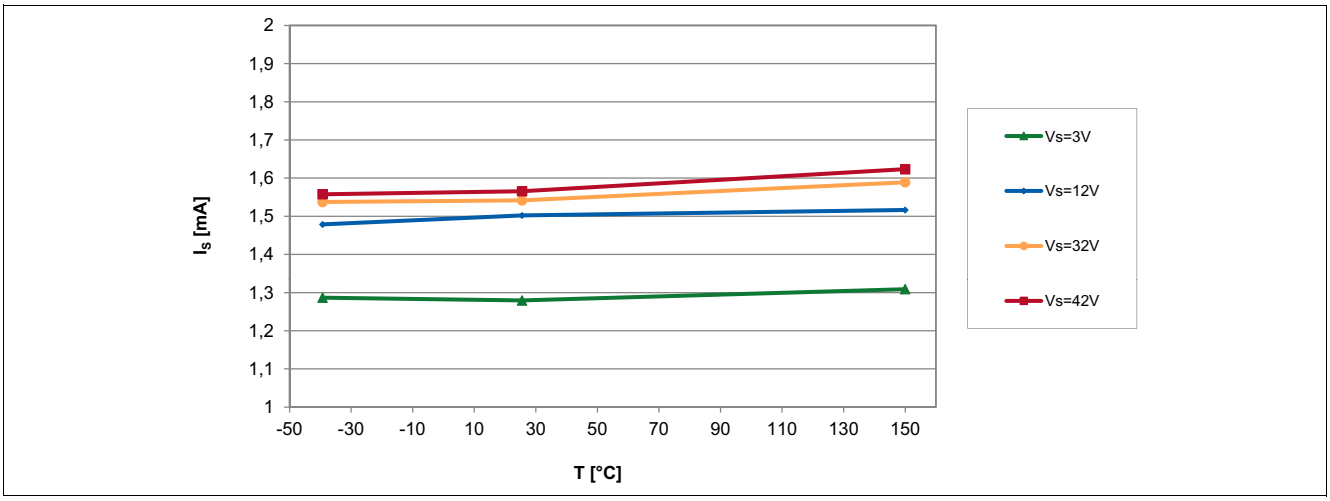

Figure 21 Supply current of the TLE4961-5M over temperature

Graphs of the electrical parameters

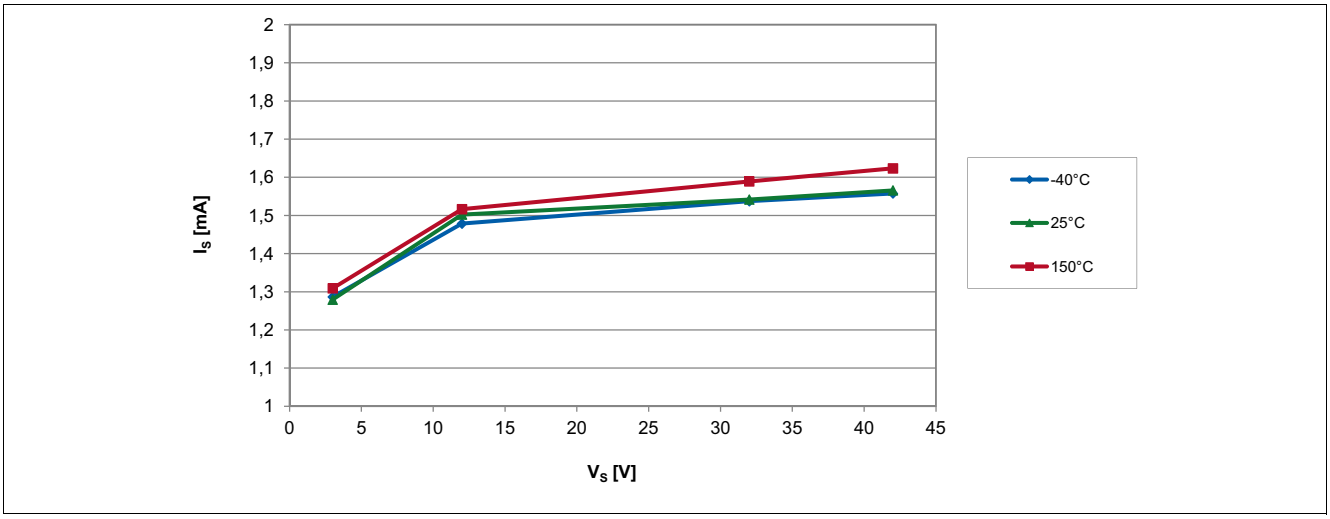

Figure 22 Supply current of the TLE4961-5M over supply voltage

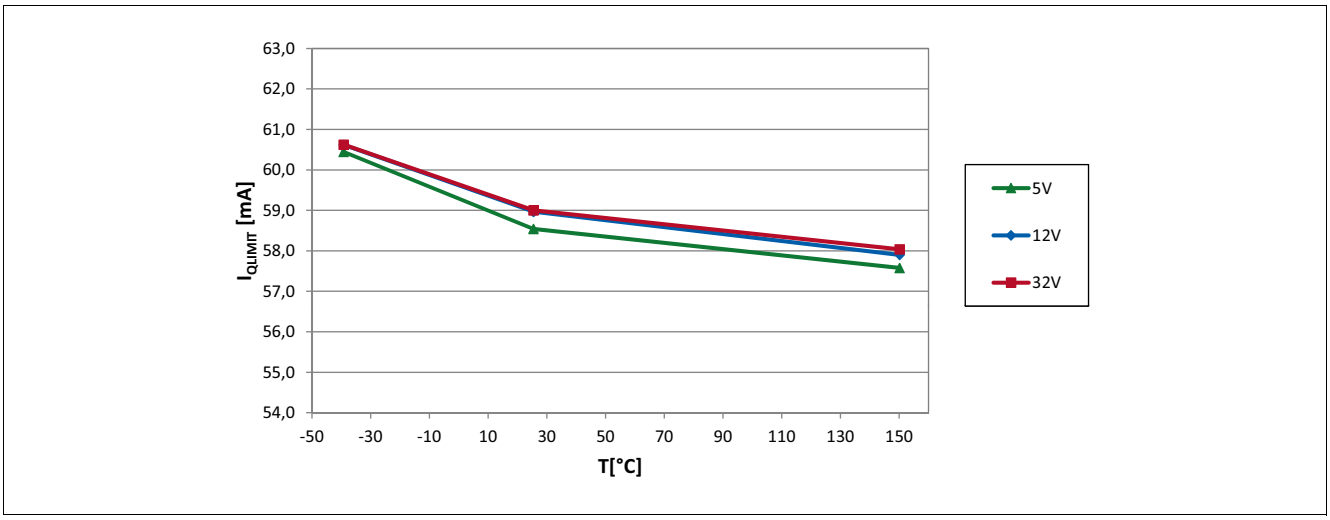

Figure 23 Output current limit of the TLE4961-5M over temperature

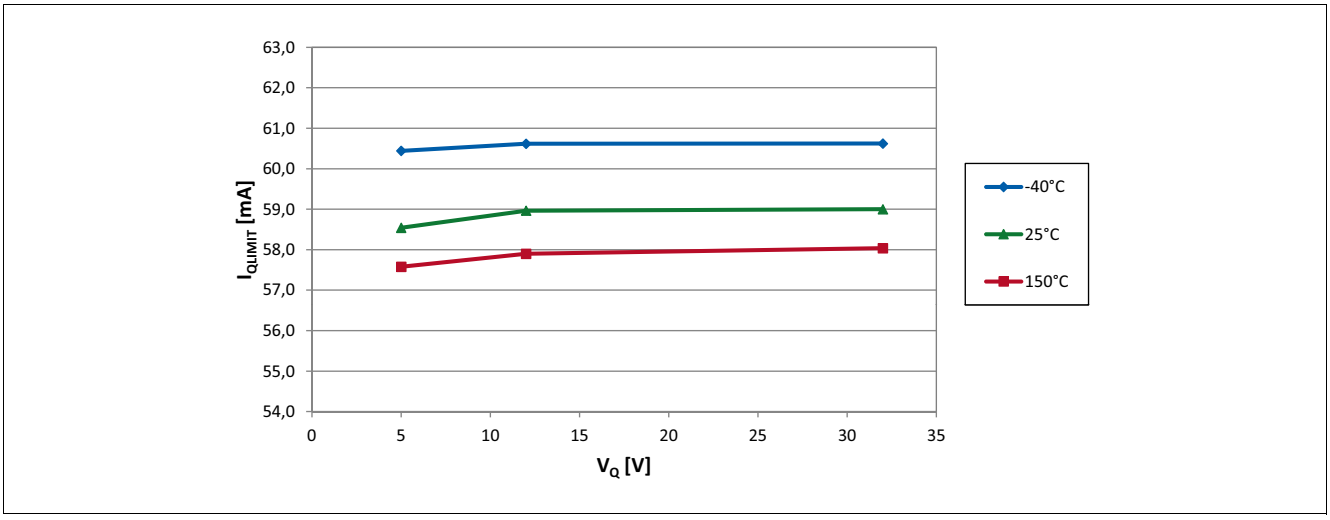

Figure 24 Output current limit of the TLE4961-5M over applied pull-up voltage

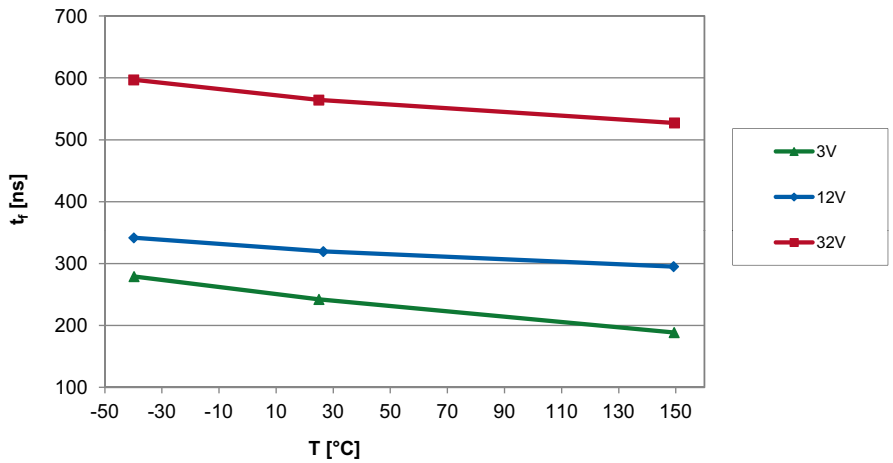

Figure 25 Output fall time of the TLE4961-5M over temperature

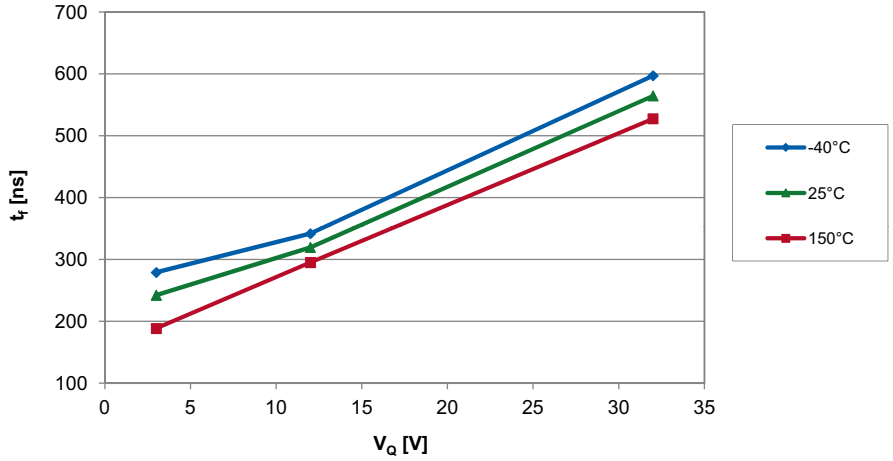

Figure 26 Output fall time of the TLE4961-5M over applied pull-up voltage

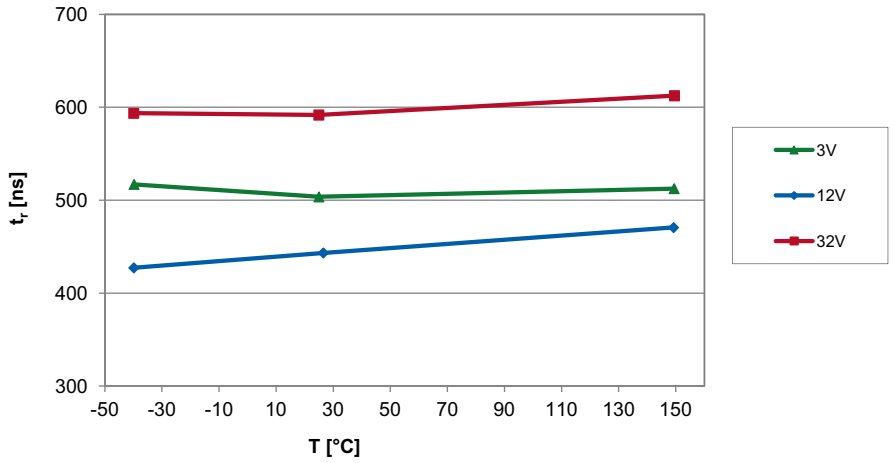

Figure 27 Output rise time of the TLE4961-5M over temperature

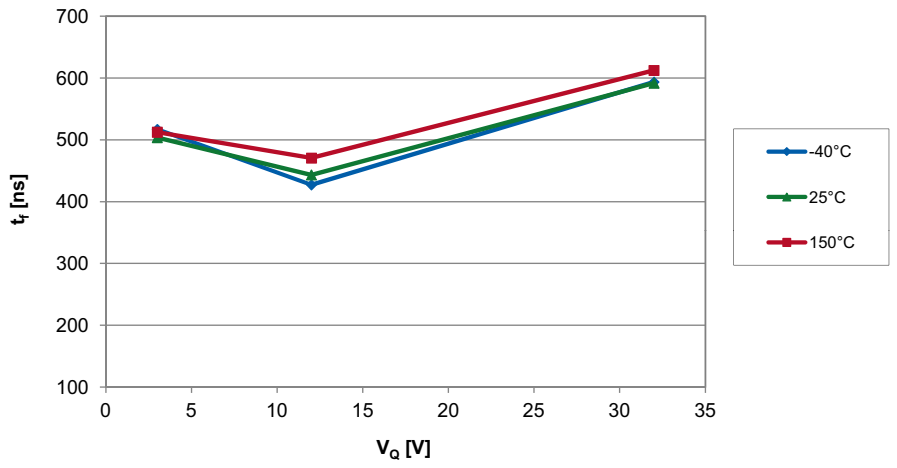

Figure 28 Output rise time of the TLE4961-5M over applied pull-up voltage

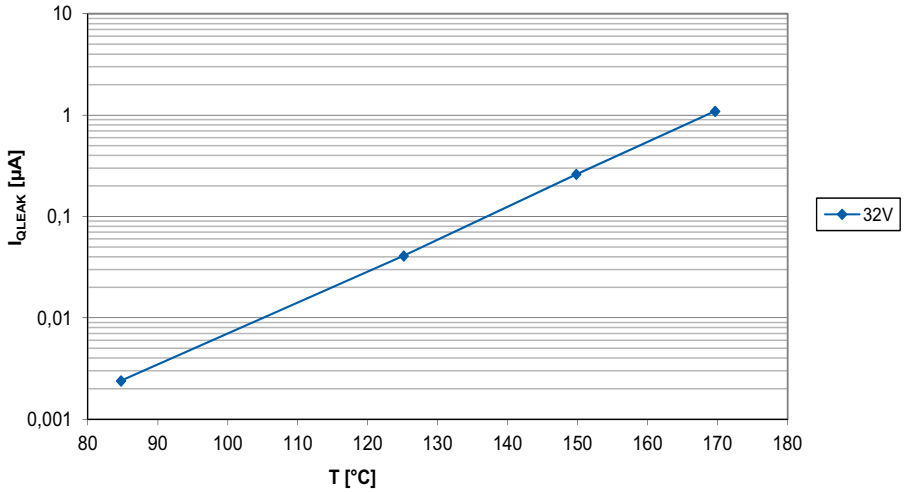

Figure 29 Output leakage current of the TLE4961-5M over temperature

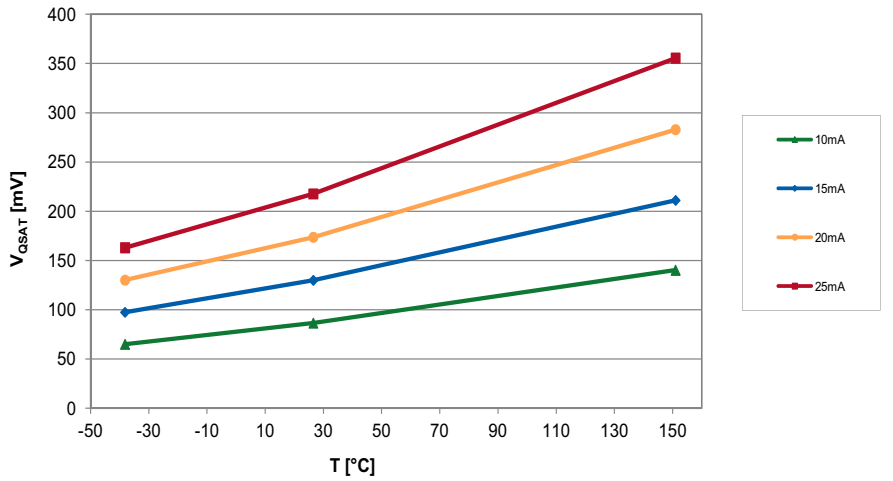

Figure 30 Saturation voltage of the TLE4961-5M over temperature

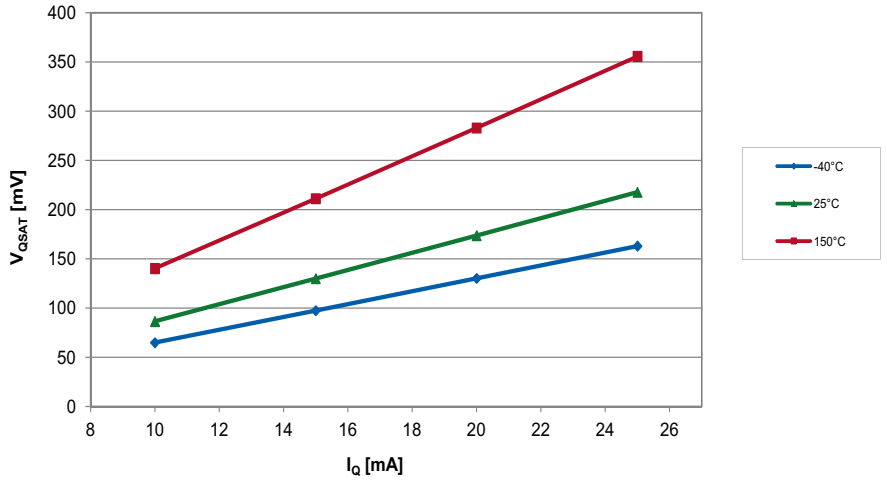

Figure 31 Saturation voltage of the TLE4961-5M over output current

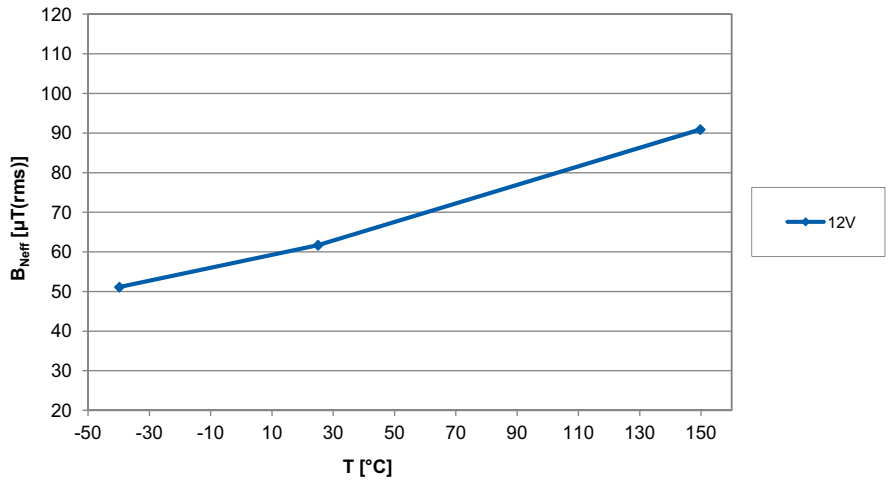

Figure 32 Effective noise of the TLE4961-5M thresholds over temperature

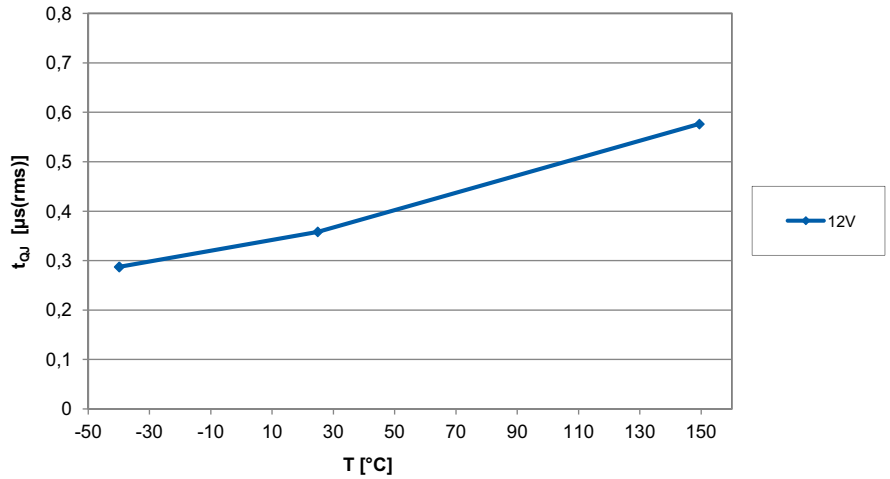

Figure 33 Output signal jitter of the TLE4961-5M over temperature

7 Revision history

Revision	Date	Changes
Revision 1.2	2019-12-20	Updated text and figure in **Chapter 2.6** Updated standards in **Table 4** Added maximum tested magnetic field in **Chapter 3.3** Editorial changes
Revision 1.0	2013-07-04	Initial release

Trademarks
All referenced product or service names and trademarks are the property of their respective owners.

www.infineon.com

Edition 2019-12-20
Published by
Infineon Technologies AG
81726 Munich, Germany

© 2019 Infineon Technologies AG.
All Rights Reserved.

Do you have a question about any aspect of this document?
Email: erratum@infineon.com

Document reference

Legal Disclaimer
The information given in this document shall in no event be regarded as a guarantee of conditions or characteristics. With respect to any examples or hints given herein, any typical values stated herein and/or any information regarding the application of the device, Infineon Technologies hereby disclaims any and all warranties and liabilities of any kind, including without limitation, warranties of non-infringement of intellectual property rights of any third party.

Information
For further information on technology, delivery terms and conditions and prices, please contact the nearest Infineon Technologies Office (**www.infineon.com**).

Warnings
Due to technical requirements, components may contain dangerous substances. For information on the types in question, please contact the nearest Infineon Technologies Office. Infineon Technologies components may be used in life-support devices or systems only with the express written approval of Infineon Technologies, if a failure of such components can reasonably be expected to cause the failure of that life-support device or system or to affect the safety or effectiveness of that device or system. Life support devices or systems are intended to be implanted in the human body or to support and/or maintain and sustain and/or protect human life. If they fail, it is reasonable to assume that the health of the user or other persons may be endangered.