Index

Page	Schematics Page Name
01	Cover Sheet / Revision History
02	Top Level
03	
04	
05	
06	
07	
08	
09	
10	

01_Revision_History.SchDoc

Revision History

Rev.	Rel.	Date	Author	Description	Page(s)
1.0	RC00	2018-04	JS	- Initial design	
1.4		2021-08	AS	Reinforced noise immunity of P4	02_Top_Level
			AS	- Increased vias diameter to 500µm to make the manufacturability easy	
1.5		2022-03	AS	inprovment of USBD+ and USBD- noise immunity with L22	05_MCU_Infrast...
1.5		2022-03	AS	inprovment of USB Supply Line wit new value of L3, C92 and L21	05_MCU_Infrast...
1.5		2022-03	AS	inprovment for manufacturability as described by Neways	

U109_22kW_GPDInverter_SELV_Interfaces

Default_Assembly

1.5

Infineon Technologies AG
Max-Planck-Str. 5,
59581 Warstein, Germany

03/2022

Link to Top Level Document

02 Top Level
02_Top_Level.SchDoc

LEGAL DISCLAIMER
THE INFORMATION GIVEN IN THIS DOCUMENT IS GIVEN FOR ILLUSTRATING PURPOSES ONLY. THE RECIPIENT OF THIS DOCUMENT MUST VERIFY ANY FUNCTION DESCRIBED HEREIN IN THE REAL APPLICATION. INFINEON TECHNOLOGIES HEREBY DISCLAIMS ANY AND ALL WARRANTIES AND LIABILITIES OF ANY KIND (INCLUDING WITHOUT LIMITATION WARRANTIES OF NON-INFRINGEMENT OF INTELLECTUAL PROPERTY RIGHTS OF ANY THIRD PARTY) WITH RESPECT TO ANY AND ALL INFORMATION GIVEN IN THIS DOCUMENT.

Infineon Technologies AG
Max-Planck-Str. 5,
59581 Warstein, Germany

Title	U109_22kW_GPDInverter_SELV_Interfaces		
Variant	Default_Assembly	Approved	<Appr.>
Size: A3	Document Name: 01_Revision_History.SchDoc	Rel.	Rev. 1.5
Date: 02.11.2022	Time: 13:31:22	Author:	Sheet of

© Infineon Technologies AG 2020. All Rights Reserved.

02_Top_Level.SchDoc

U_03_Supply
03_Supply.SchDoc
Disable_5V_TRACKER
EN_CAN_LDO

TP1 GND_SELV
TP2 GND_SELV
TP3 GND_SELV

P1 SPEED
connector 2
V9_SELV
EN_V9_SPEED

U_13_SPEED_IF
13_SPEED_IF.SchDoc
SPEED_1
SPEED_1_SPD
SPEED_1_AK_H
SPEED_1_ERR
EN_V9_SPEED

U_06_MCU_IO
06_MCU_IO.SchDoc
REGISTER_CP
REGISTER_Data
REGISTER_STR
REGISTER_OE
SPEED_1_SPD
SPEED_1_AK_H
SPEED_1_ERR
Analog_mux_IN1
Analog_mux_IN2
AO_OV_V5_DISPLAY_SENSE
AO_OV_V5_SENSOR
AO_OV_V6_SENSE
AO_VUSB_SELV_SENSE
NTC_SELV
Analog_mux_AO_IN_MCU
MIKRO_EN
MIKRO_RX
MIKRO_TX
BLE_RXD
BLE_TXD
FAN_1_SPD_MCU
FAN_1_PWM_MCU
ECAT_P0.TXD0
ECAT_P0.TXD1
ECAT_P0.TXD2
ECAT_P0.TXD3
ECAT_P0.RXD0
ECAT_P0.RXD1
ECAT_P0.RXD2
ECAT_P0.RXD3
ECAT_P0.TX_CLK
ECAT_P0.RX_CLK
ECAT_P0.RXDV
ECAT_P0.RX_ERR
ECAT_P0.TX_ENA
ECAT_P0.LINK
ECAT_LED_LINK_ACT_P0
ECAT_PHY_RESET
ECAT_MDC
ECAT_MDIO
ECAT_PHY_CLK25
ECAT_P1.TXD0
ECAT_P1.TXD1
ECAT_P1.TX2
ECAT_P1.TX3
ECAT_P1.RXD0
ECAT_P1.RXD1
ECAT_P1.RXD2
ECAT_P1.RXD3
ECAT_P1.TX_CLK
ECAT_P1.RX_CLK
ECAT_P1.RXDV
ECAT_P1.RX_ERR
ECAT_P1.TX_ENA
ECAT_P1.LINK
ECAT_LED_LINK_ACT_P1
ECAT_LED_RUN
ECAT_LED_ERR
UART_1_Tx
UART_1_Rx
UART_2_Tx
UART_2_Rx
GPHSSI_PG
Optiga_SDA
LED_IO_1
LED_IO_2
RS_485_DRIVER_INPUT
RS_485_RECEIVER_OUT
CAN_TXD
CAN_RXD
ITS_STATUS
STO_SELV
Fault_IN_SELV
STO_SELV_EN

U_10_AO_Sensing
10_AO_Sensing.SchDoc
AO_OV_V5_DISPLAY_SENSE
AO_OV_V5_SENSOR
AO_OV_V6_SENSE
AO_VUSB_SELV_SENSE
NTC_SELV
Analog_mux_AO_IN_MCU
AO_OV_V5_GPHSSI_SENSE
AO_OV_V9_SPEED_SENSE
AO_OV_V24_SENSE
AO_NTC
Analog_mux_AO_IN

P2 NTC
connector 2
GND_SELV

U_15_Shift_Register
15_Shift_Register.SchDoc
REGISTER_CP
REGISTER_Data
REGISTER_STR
REGISTER_OE
Analog_mux_IN1
Analog_mux_IN2
AO_OV_V5_GPHSSI_SENSE
AO_OV_V9_SPEED_SENSE
AO_OV_V24_SENSE
AO_OV_V24_STO
Analog_mux_AO_IN
EN_5V_DISP
Display_RST_MCU
EN_V9_SPEED
EN_E.CAT_LDO
EN_CAN_LDO
Disable_5V_TRACKER
RS_485_RECEIVER_EN
RS_485_DRIVER_OUT_EN
LED_IO_3
GPHSSI_ENB
GPHSSI_SUPPLY_EN
MIKRO_RST
Optiga_RST
FAN_1_OFF
FAN_2_3_OFF
AO_OV_INPUT_1
AO_NTC_DAIR

U_12_Display
12_Display.SchDoc
Display_Tx
Display_Rx
EN_5V_DISP
Display_RST_MCU

U_16_UART_MUX
16_UART_MUX.SchDoc
UART_1_Tx
UART_1_Rx
UART_2_Tx
UART_2_Rx
Display_Tx
Display_Rx
SELV_Rx
SELV_Tx
UART_MUX_SELECTOR

U_11_GPHSSI
11_GPHSSI.SchDoc
GPHSSI_TX_uC
GPHSSI_RX_uC
GPHSSI_PG
GPHSSI_RX_SELV
GPHSSI_TX_SELV
GPHSSI_ENB
GPHSSI_SUPPLY_EN
GPHSSI1_CANL
GPHSSI1_CANH

P3 GPHSSI
connector_4
V5_SELV_GPHSSI
GND_SELV

U_08_Optiga_Trust
08_Optiga_Trust.SchDoc
Optiga_SDA
Optiga_RST
Optiga_SCL

U_05_MCU_Infrastructure
05_MCU_Infrastructure.SchDoc
UART_MUX_SELECTOR
Optiga_SCL
STO_SELV_MCU
USB_D-
USB_D+

U_04_interfaces
04_interfaces.SchDoc
LED_IO_1
LED_IO_2
RS_485_DRIVER_INPUT
RS_485_RECEIVER_OUT
CAN_TXD
CAN_RXD
RS_485_RECEIVER_EN
RS_485_DRIVER_OUT_EN
LED_IO_3
RS_485_B
RS_485_A
CAN_L
CAN_H

P5 RS-485
connector 2
P6 CAN
Connector 3
GND_SELV

U_17_STO
17_STO.SchDoc
STO_SELV_EN
STO_SELV
STO_SELV_MCU
AO_OV_V24_STO

U_18_EtherCAT_IF_PORT_OUT
18_EtherCAT_IF_PORT_OUT.SchDoc

U_07_EtherCat_IF_PORT_IN
07_EtherCat_IF_PORT_IN.SchDoc
EN_E.CAT_LDO

P7 Other connexions
connector_4
V5_SENSOR V24_SELV
GND_SELV

U1
Connector 20
SELV_Rx
SELV_Tx
Fault_IN_SELV
STO_SELV
FAN_1_OFF
FAN_1_PWM_MCU
FAN_1_SPD_MCU
V24_SELV V5_SENSOR V33_SELV
GPHSSI_RX_SELV
GPHSSI_TX_SELV
ITS_STATUS
FAN_2_3_OFF
AO_NTC_DAIR
DAIR_NTC2
GND_SELV
Power Board

Voltage monitoring of VUSB on AO_SENSING
V6_SELV
D1 MBRA340
VUSB
P4 USB
VCC
D-
D+
GND
Shield
USB_TYPE_B
C77 1nF
P8 SMTSO_M4
GND_SELV
Chassis_GND

Miscellaneous
Miscellaneous.SchDoc

Infineon Technologies AG
Max-Planck-Str. 5,
59581 Warstein, Germany

Title	U109_22kW_GPDInverter_SELV_Interfaces		
Variant	Default_Assembly	Approved	<Appr.>
Size: A3	Document Name: 02_Top_Level.SchDoc	Rel.	Rev. 1.5
Date: 02.11.2022	Time: 13:31:22	Author:	Sheet of

© Infineon Technologies AG 2020. All Rights Reserved.

03_Supply.SchDoc

6V_SELV - DC/DC

>350mA

Voltage monitoring of V6_SELV on AO_SENSING

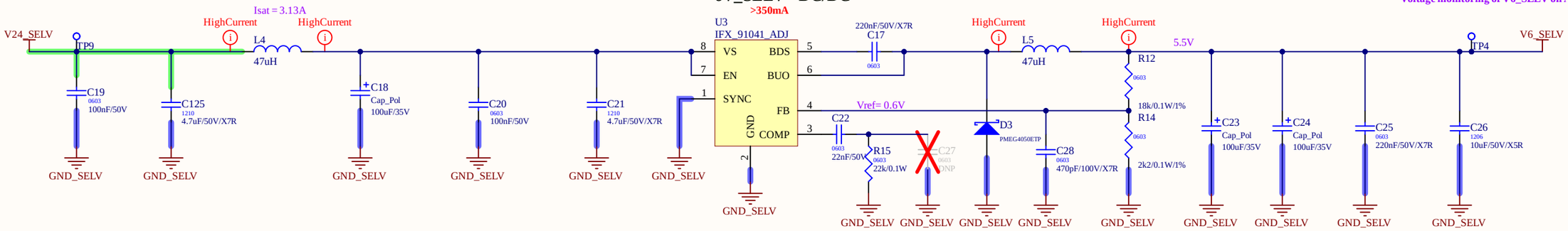

5V_SELV_CAN - LDO 5V

<150mA (if Failure)

No monitoring of V5_SELV_CAN

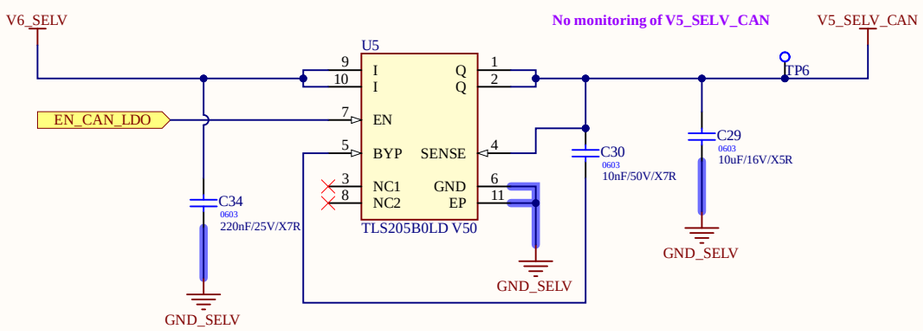

3V3_SELV - 3V3 MCU Supply

>500mA (if failure)

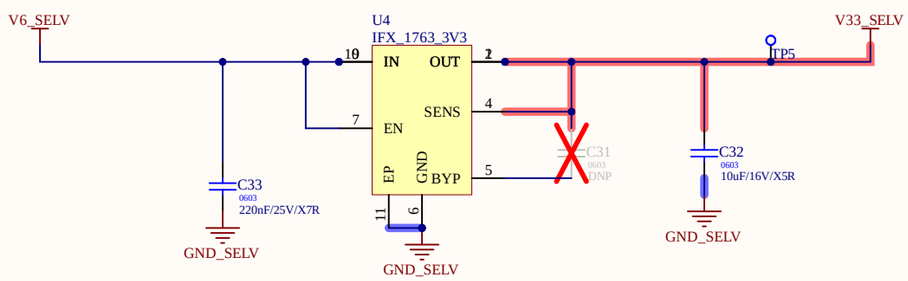

5V_Sensor- Voltage Tracker

Voltage monitoring of V5_SENSOR on AO_SENSING

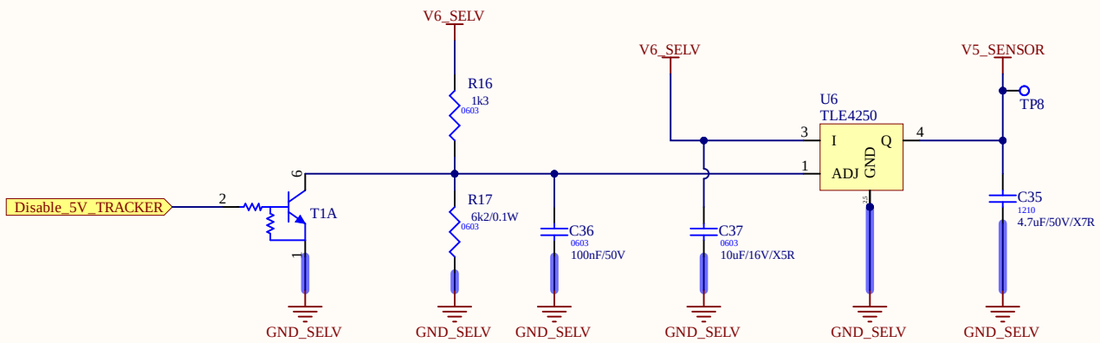

Infineon Technologies AG
Max-Planck-Str. 5,
59581 Warstein, Germany

Title	U109_22kW_GPDInverter_SELV_Interfaces		
Variant	Default_Assembly	Approved	<Appr.>
Size: A3	Document Name: 03_Supply.SchDoc	Rel.	Rev. 1.5
Author:			
Date: 02.11.2022 Time: 13:31:22	SVN Revision: Not in version control		

© Infineon Technologies AG 2020. All Rights Reserved. Sheet of

04_interfaces.SchDoc

CAN Transceiver

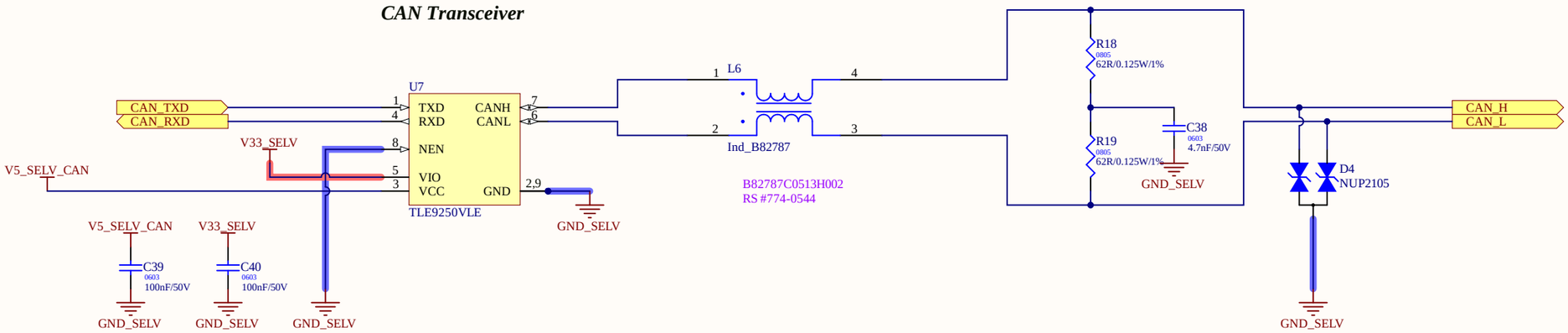

RS-485 Transceiver

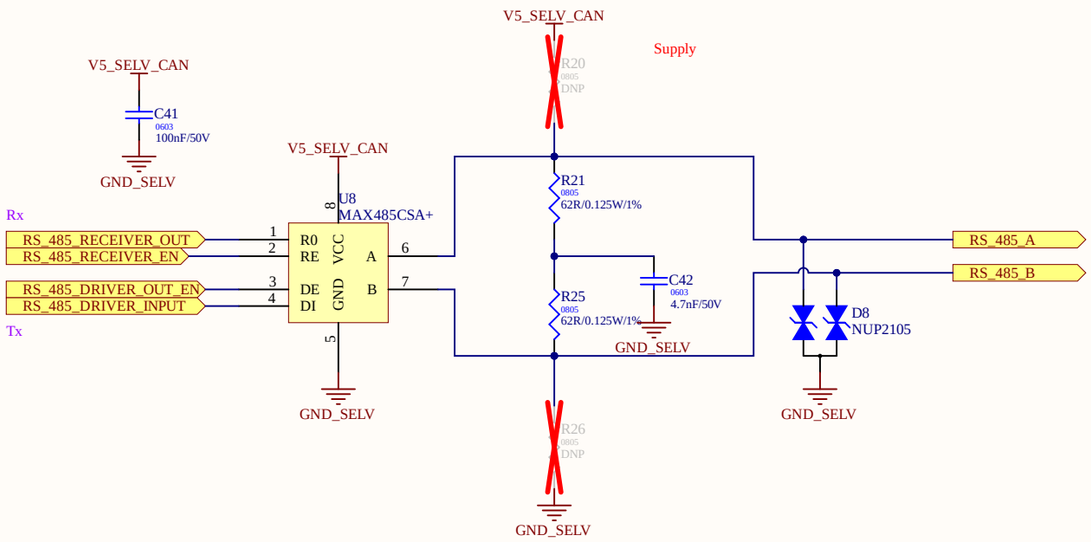

LED IOs

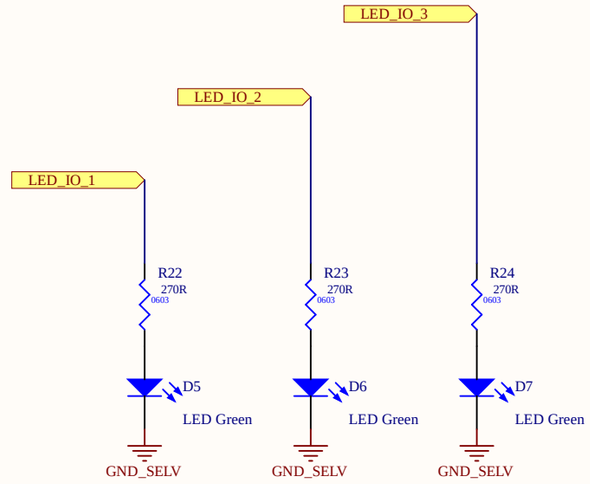

Infineon Technologies AG
Max-Planck-Str. 5,
59581 Warstein, Germany

Title	U109_22kW_GPDInverter_SELV_Interfaces		
Variant	Default_Assembly	Approved	<Appr.>
Size: A3	Document Name: 04_interfaces.SchDoc	Rel.	Rev. 1.5
Author:			
Date: 02.11.2022 Time: 13:31:22	SVN Revision: Not in version control		

© Infineon Technologies AG 2020. All Rights Reserved.

Sheet of

05_MCU_Infrastructure.SchDoc

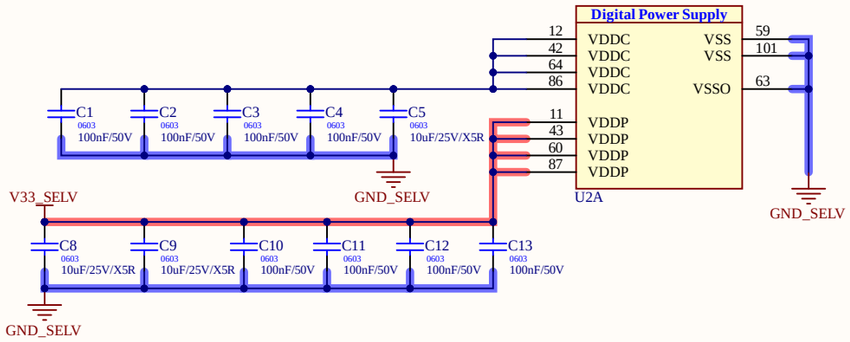

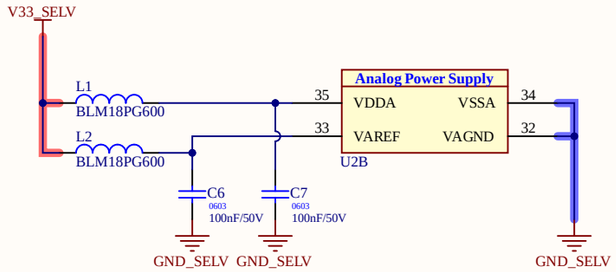

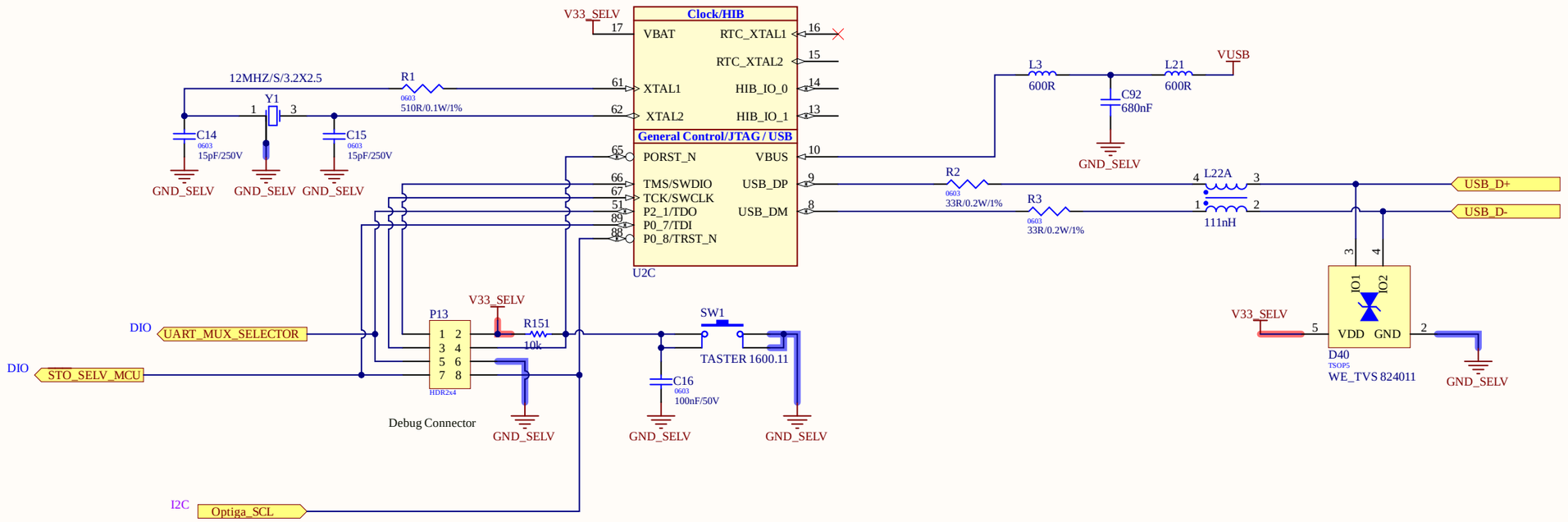

Infineon Technologies AG **Max-Planck-Str. 5,** 59581 Warstein, Germany			
Title	U109_22kW_GPDInverter_SELV_Interfaces		
Variant	Default_Assembly	Approved	<Appr.>
Size: A3	Document Name: 05_MCU_Infrastructure.SchDoc	Rel.	Rev. 1.5
Author:			
Date: 02.11.2022 Time: 13:31:23	SVN Revision: Not in version control		
© Infineon Technologies AG 2020. All Rights Reserved.	Sheet of		

06_MCU_IO.SchDoc

Black line refers to ECAT ports

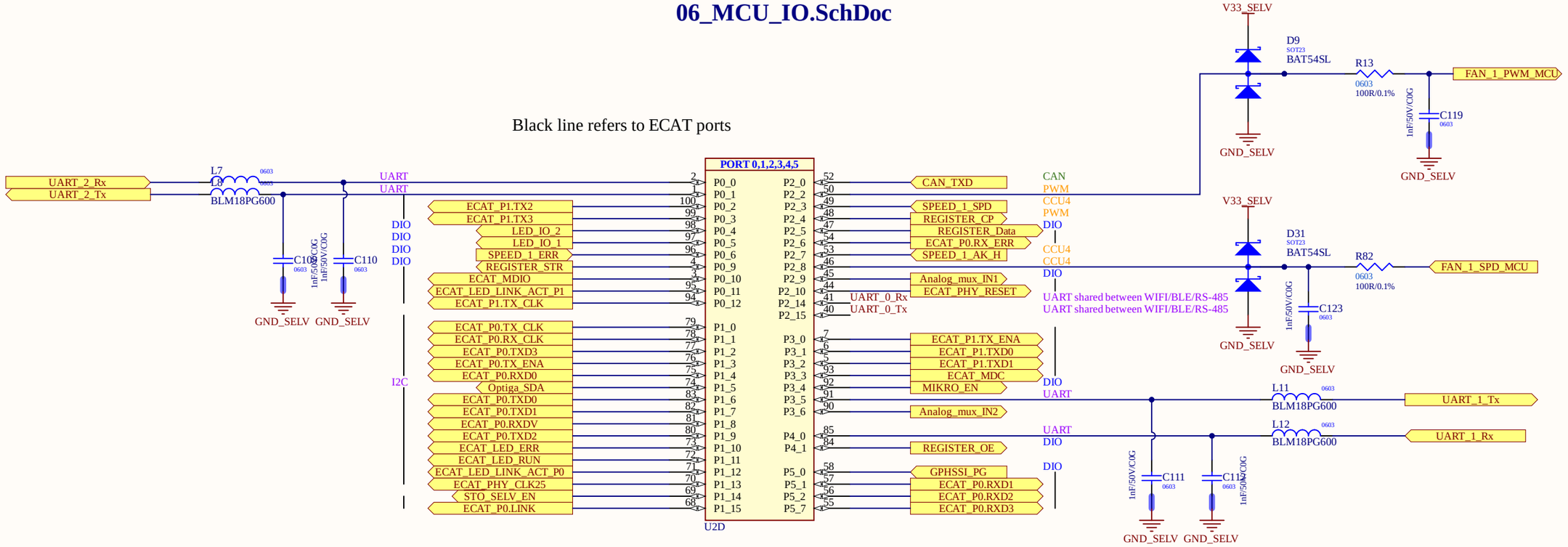

Recheck pin assignements since we changed some DIOs

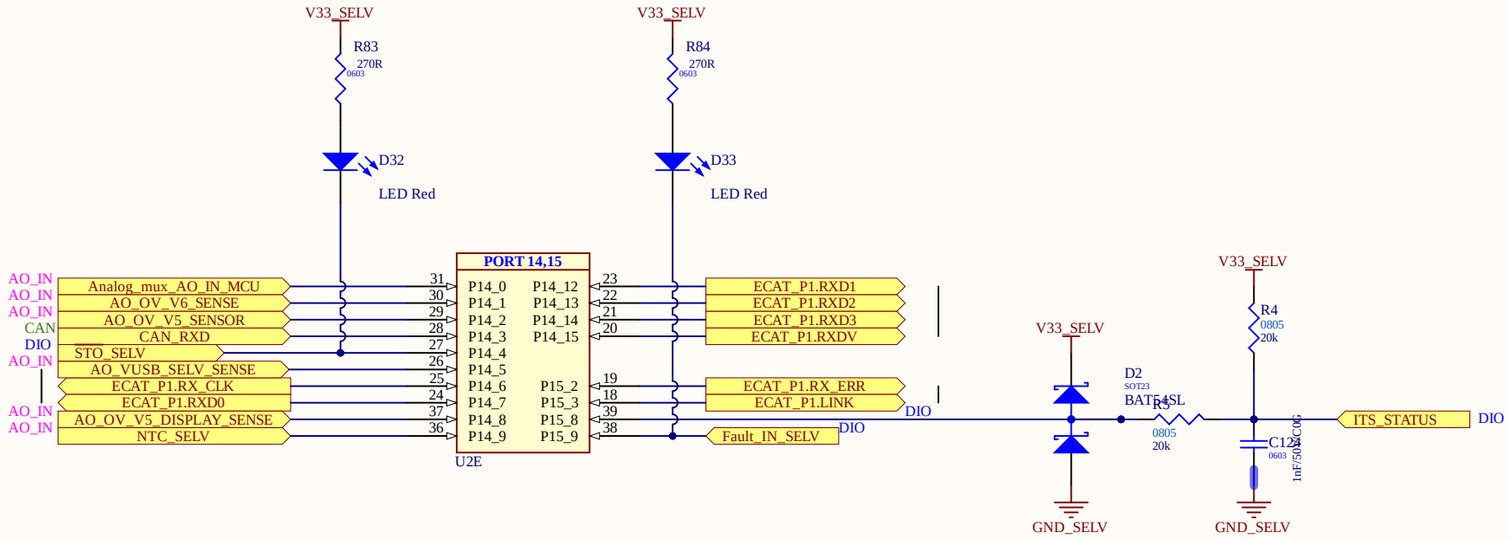

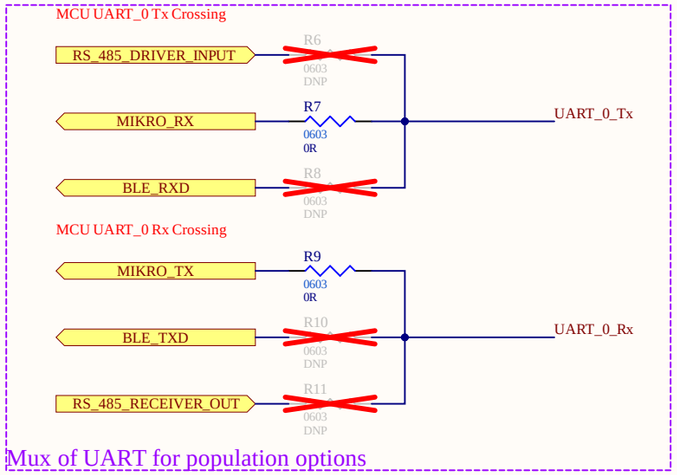

Mux of UART for population options

Infineon Technologies AG Max-Planck-Str. 5, 59581 Warstein, Germany			
Title	U109_22kW_GPDInverter_SELV_Interfaces		
Variant	Default_Assembly	Approved	<Appr.>
Size: A3	Document Name: 06_MCU_IO.SchDoc	Rel.	Rev. 1.5
Author:			
Date: 02.11.2022 Time: 13:31:23	SVN Revision: Not in version control		
© Infineon Technologies AG 2020. All Rights Reserved.	Sheet of		

07_EtherCat_IF_PORT_IN.SchDoc

1.8V_E.CAT LDO - LDO 1.8V

No monitoring of V1_8_SELV

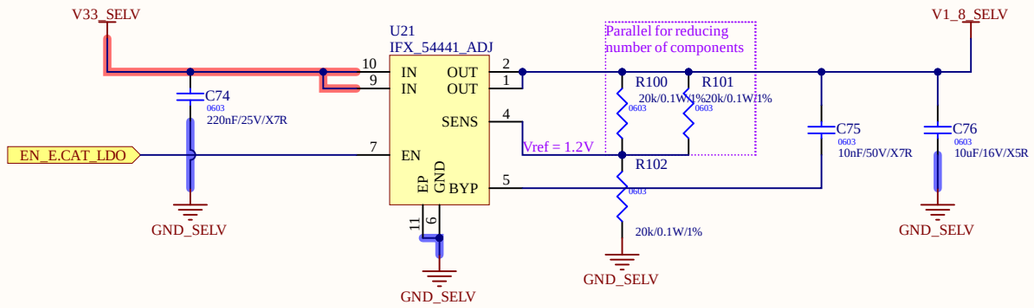

ECAT PORT IN

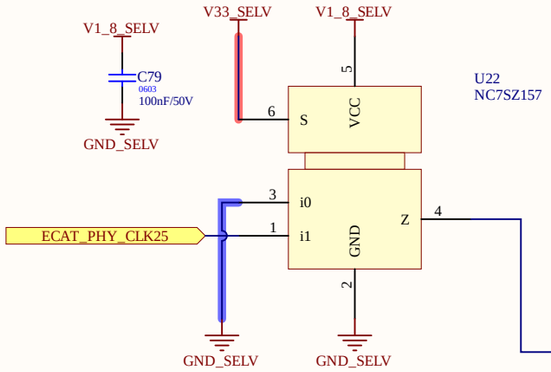

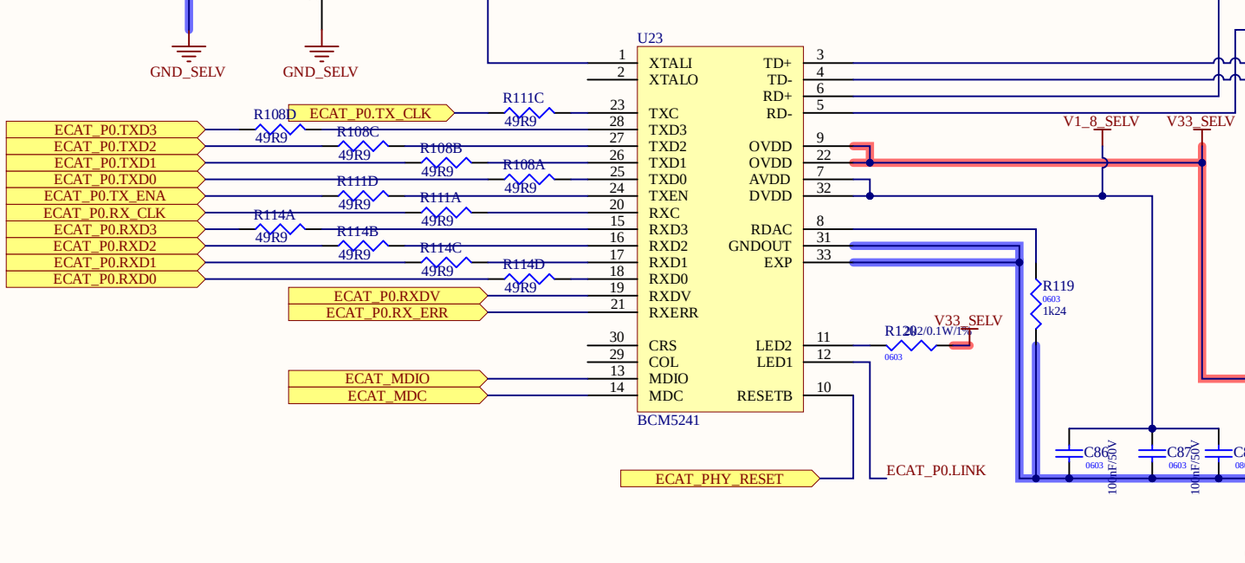

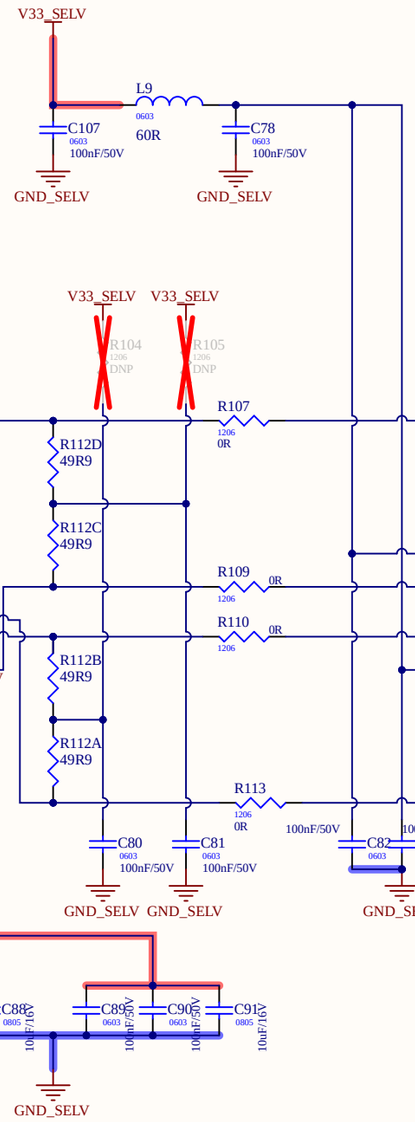

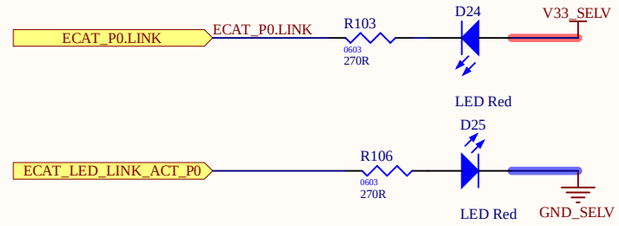

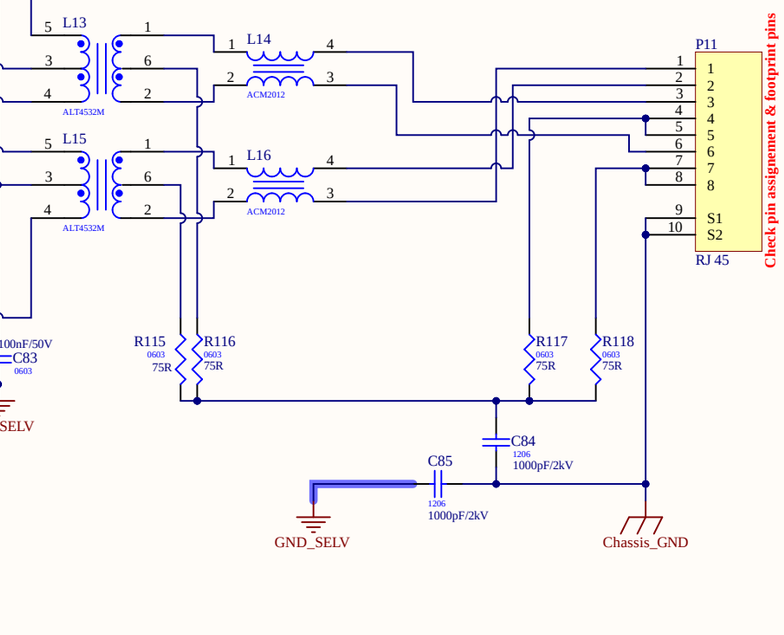

Infineon Technologies AG Max-Planck-Str. 5, 59581 Warstein, Germany	
Title	U109_22kW_GPDInverter_SELV_Interfaces
Variant	Default_Assembly
Approved	<Appr.>
Size: A3	Document Name: 07_EtherCat_IF_PORT_IN.SchDoc
Rel.	
Rev.	1.5
Author:	
Date: 02.11.2022 Time: 13:31:23	SVN Revision: Not in version control
© Infineon Technologies AG 2020. All Rights Reserved.	Sheet of

08_Optiga_Trust.SchDoc

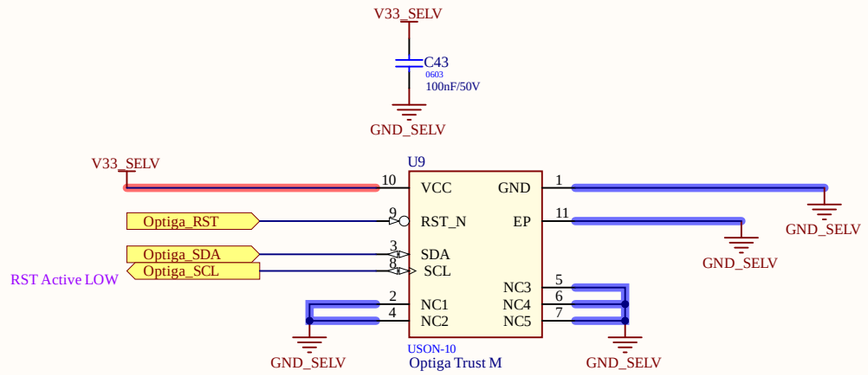

Infineon Technologies AG **Max-Planck-Str. 5,** 59581 Warstein, Germany			
Title	U109_22kW_GPDInverter_SELV_Interfaces		
Variant	Default_Assembly	Approved	<Appr.>
Size: A3	Document Name: 08_Optiga_Trust.SchDoc	Rel.	Rev. 1.5
Author:			
Date: 02.11.2022 Time: 13:31:23	SVN Revision: Not in version control		
© Infineon Technologies AG 2020. All Rights Reserved.	Sheet of		

09_Wireless.SchDoc

Wifi - MIKROE

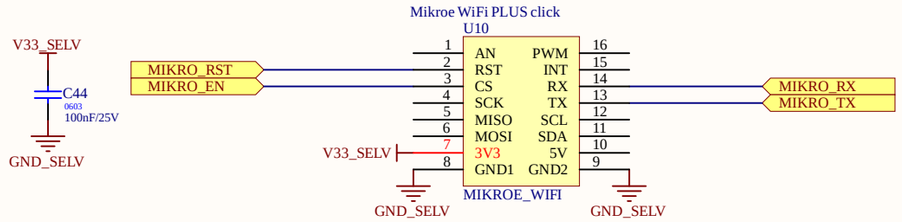

USING UART / RST / CS & 3V3

Bluetooth - RN42

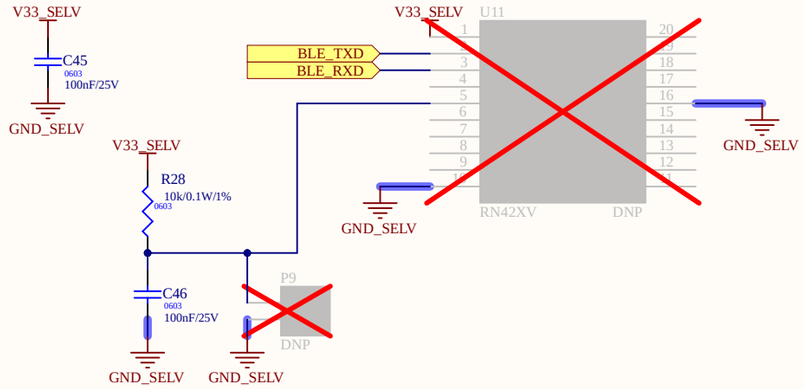

Infineon Technologies AG
Max-Planck-Str. 5,
59581 Warstein, Germany

Title	U109_22kW_GPDInverter_SELV_Interfaces		
Variant	Default_Assembly	Approved	<Appr.>
Size: A3	Document Name: 09_Wireless.SchDoc	Rel.	Rev. 1.5
Author:			
Date: 02.11.2022 Time: 13:31:24	SVN Revision: Not in version control		

© Infineon Technologies AG 2020. All Rights Reserved.
Sheet of

10_AO_Sensing.SchDoc

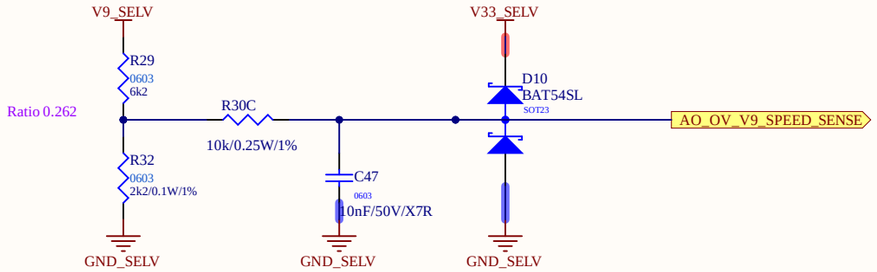

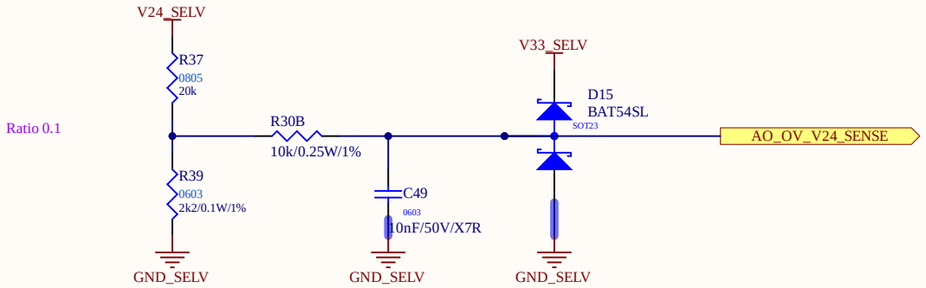

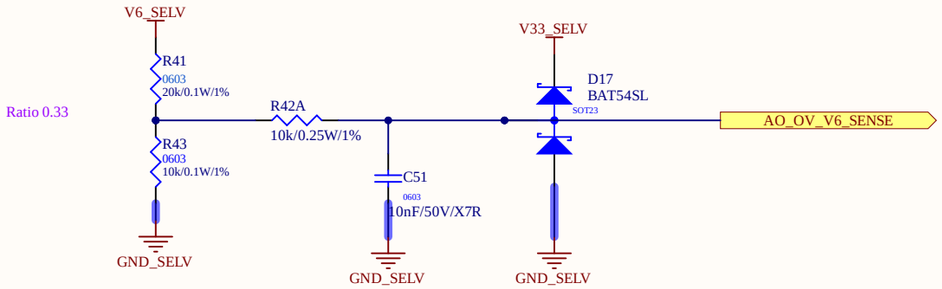

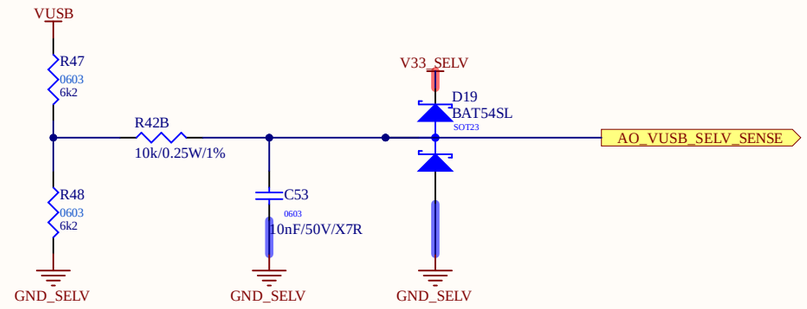

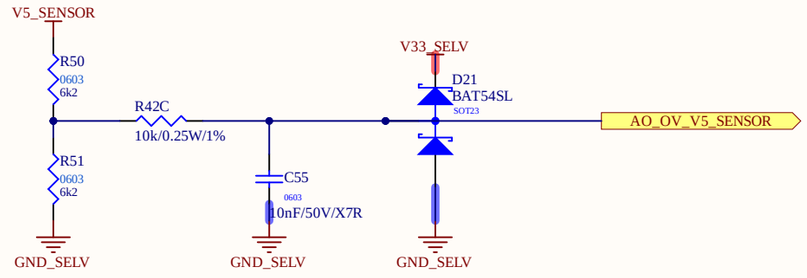

Not used

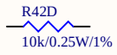

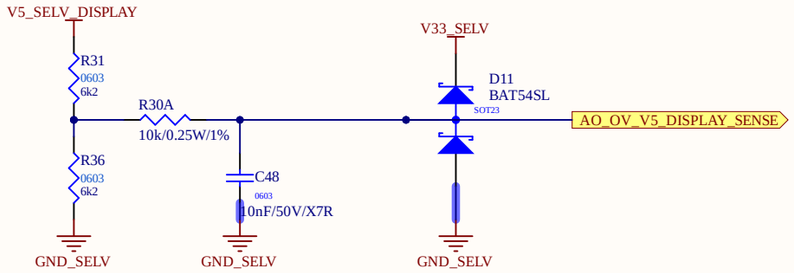

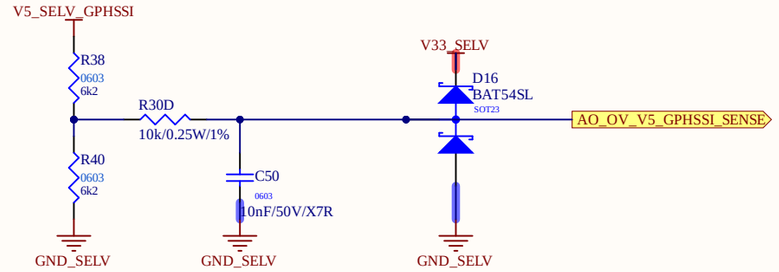

Supply LEDs

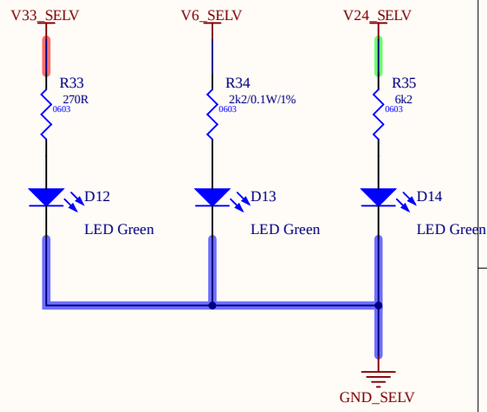

NTC

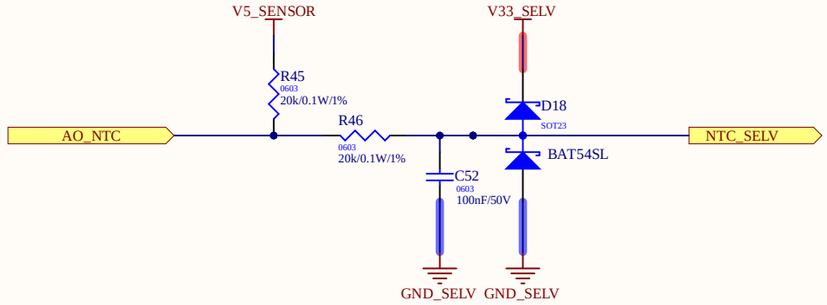

Analog Mux AO

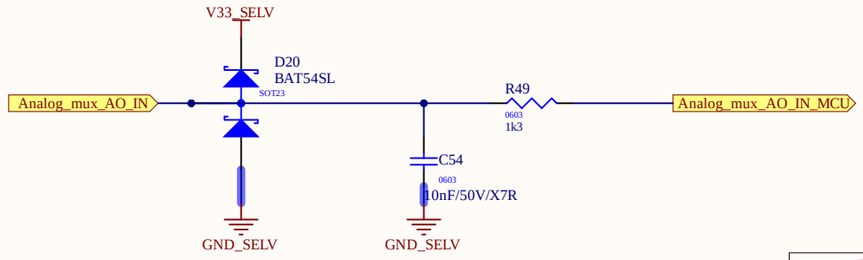

Infineon Technologies AG
Max-Planck-Str. 5,
59581 Warstein, Germany

Title	U109_22kW_GPDInverter_SELV_Interfaces		
Variant	Default_Assembly	Approved	<Appr.>
Size: A3	Document Name: 10_AO_Sensing.SchDoc	Rel.	Rev. 1.5
Author:			
Date: 02.11.2022 Time: 13:31:24	SVN Revision: Not in version control		

© Infineon Technologies AG 2020. All Rights Reserved.

Sheet of

11_GPHSSI.SchDoc

V5_SELV_GPHSSI - GPHSSI Supply

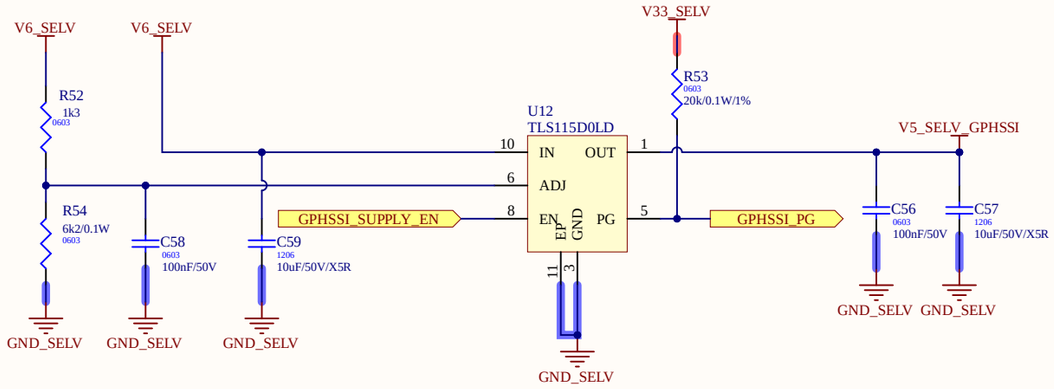

GPHSSI_Transceiver

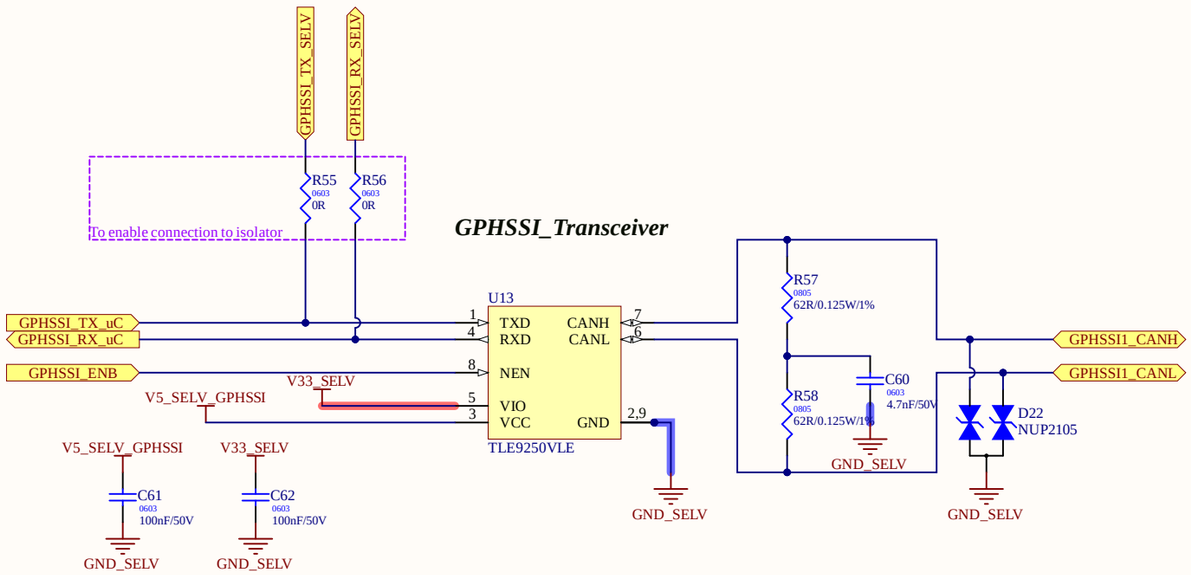

GPHSSI_Concept

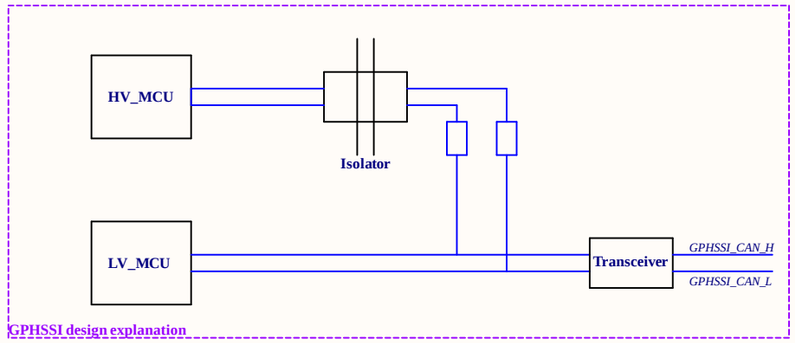

Infineon Technologies AG
Max-Planck-Str. 5,
59581 Warstein, Germany

Title	U109_22kW_GPDInverter_SELV_Interfaces		
Variant	Default_Assembly	Approved	<Appr.>
Size: A3	Document Name: 11_GPHSSI.SchDoc	Rel.	Rev. 1.5
Author:			
Date: 02.11.2022 Time: 13:31:24	SVN Revision: Not in version control		

© Infineon Technologies AG 2020. All Rights Reserved.

Sheet of

12_Display.SchDoc

5V_DISPLAY- ADJ Post Regulator

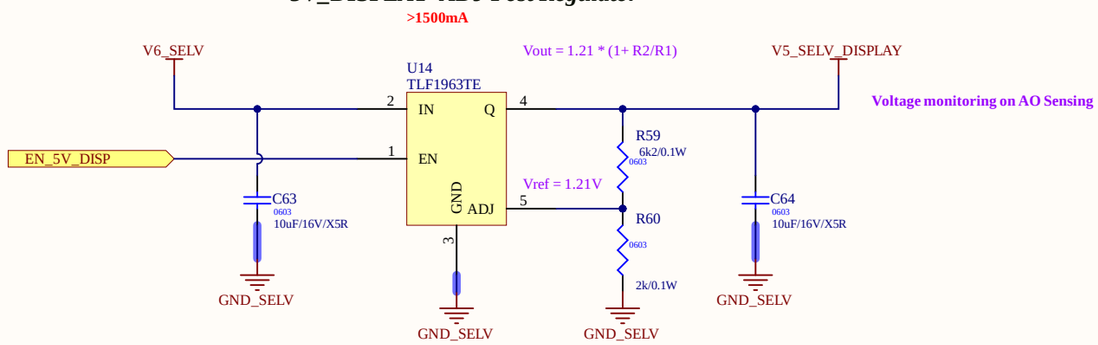

Display Reset

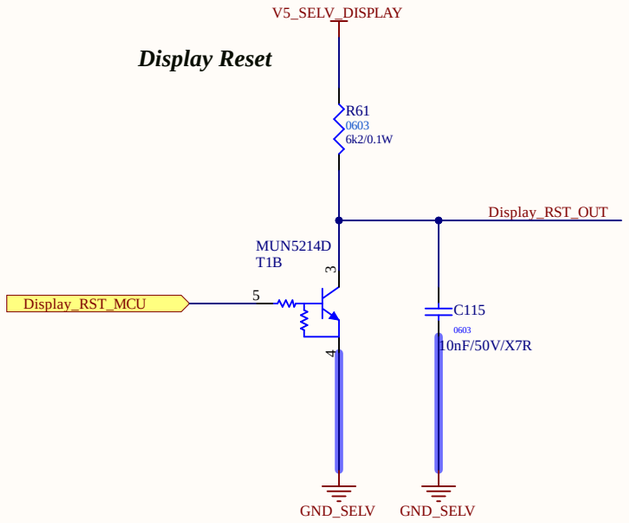

Display UART

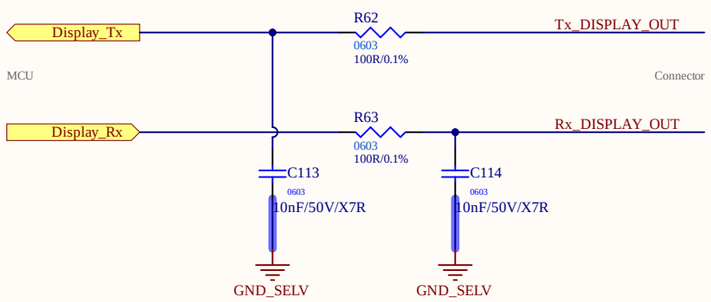

Display Connector

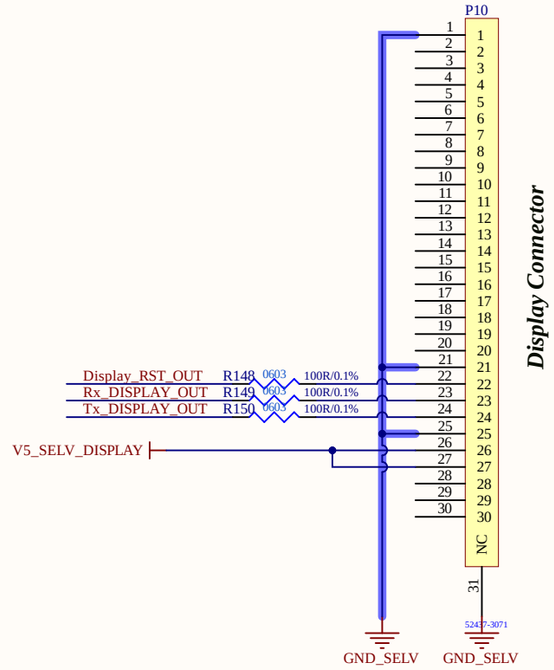

Infineon Technologies AG
Max-Planck-Str. 5,
59581 Warstein, Germany

Title	U109_22kW_GPDInverter_SELV_Interfaces		
Variant	Default_Assembly	Approved	<Appr.>
Size: A3	Document Name: 12_Display.SchDoc	Rel.	Rev. 1.5
Author:			
Date: 02.11.2022 Time: 13:31:24	SVN Revision: Not in version control		

© Infineon Technologies AG 2020. All Rights Reserved.

Sheet of

13_SPEED_IF.SchDoc

9V_SELV_SPEED - LDO ADJ

50mA output capability

Connected after the disconnect net

Voltage monitoring of V9 on AO_SENSING

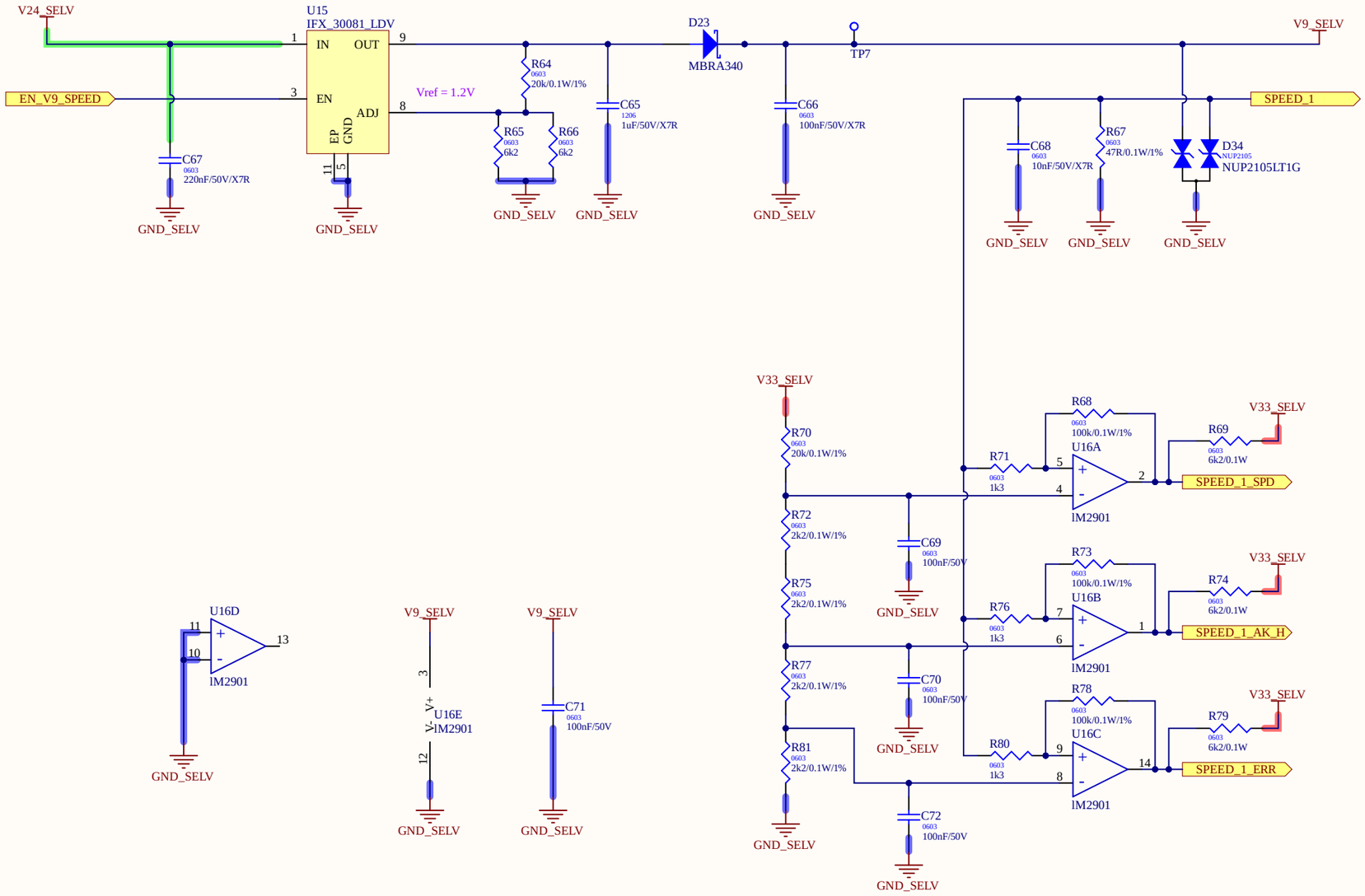

Infineon Technologies AG	
Max-Planck-Str. 5,	
59581 Warstein, Germany	
Title	U109_22kW_GPDInverter_SELV_Interfaces
Variant	Default_Assembly
Approved	<Appr.>
Size: A3	Document Name: 13_SPEED_IF.SchDoc
Rel.	
Rev.	1.5
Author:	
Date: 02.11.2022 Time: 13:31:25	SVN Revision: Not in version control
© Infineon Technologies AG 2020. All Rights Reserved.	Sheet of

15_Shift_Register.SchDoc

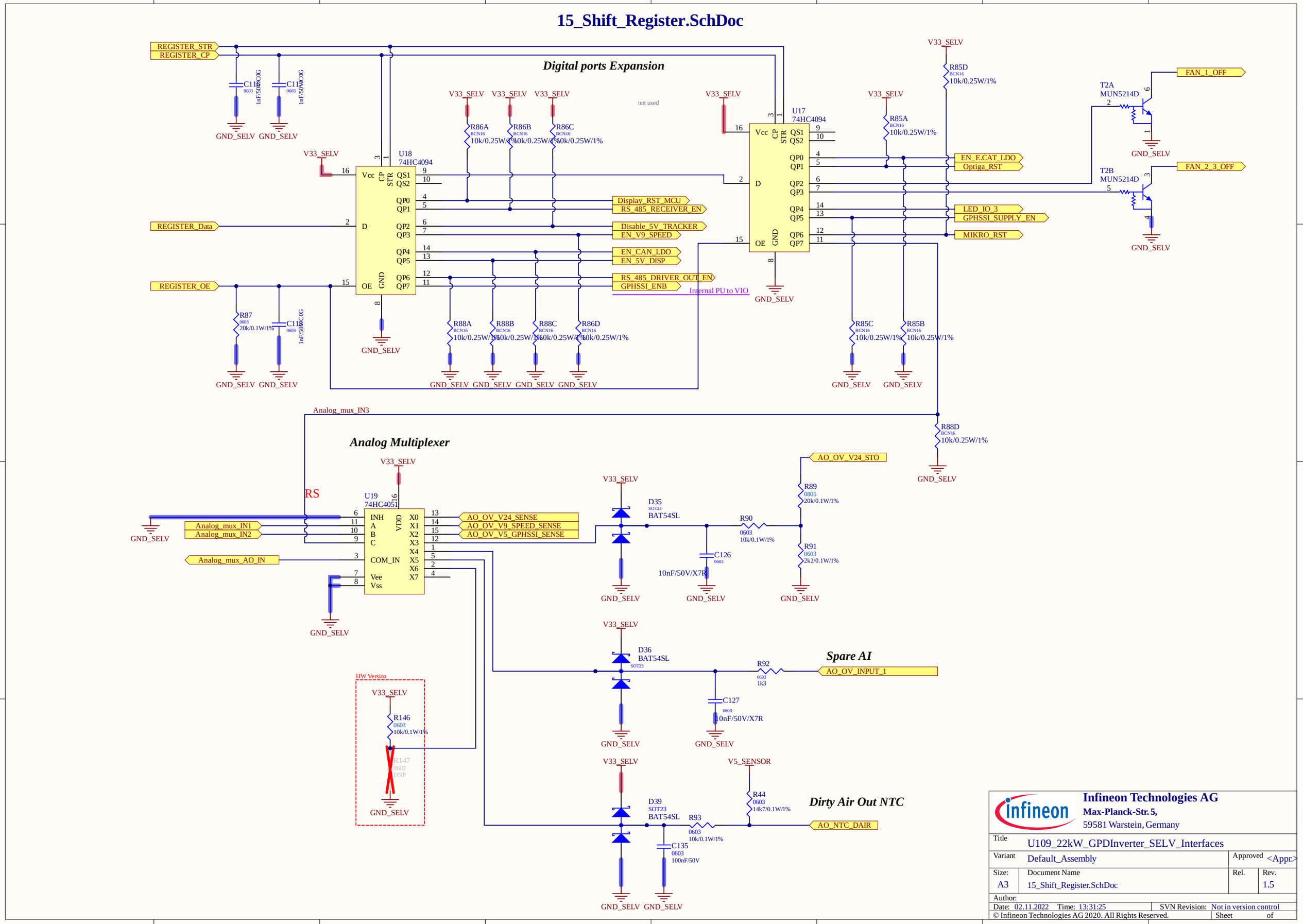

Infineon Technologies AG
Max-Planck-Str. 5,
59581 Warstein, Germany

Title	U109_22kW_GPDInverter_SELV_Interfaces		
Variant	Default_Assembly	Approved	<Appr.>
Size: A3	Document Name 15_Shift_Register.SchDoc	Rel.	Rev. 1.5
Author:			
Date: 02.11.2022 Time: 13:31:25	SVN Revision: Not in version control		

© Infineon Technologies AG 2020. All Rights Reserved.

Sheet of

16_UART_MUX.SchDoc

Multiplexer between Display & FELV UART communication

Standard connection :	Population option:
UART 1 -> SELV	UART 1 -> GPHSSI
UART 2 -> Display	UART 2 -> SELV

DNP
UART 2 -> SELV
UART 2 -> Display

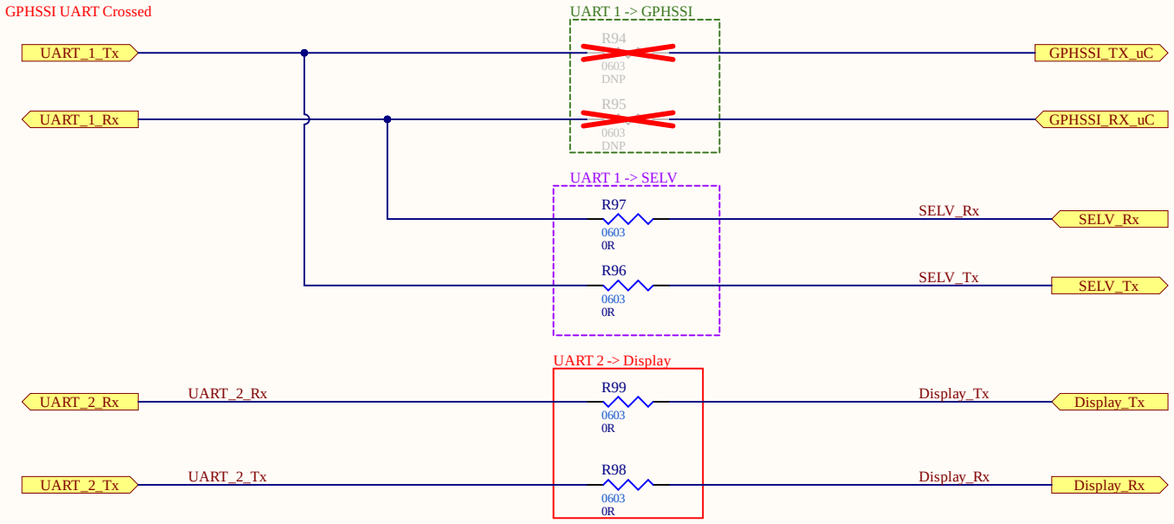

MUX UART / By default DNP but used as population option

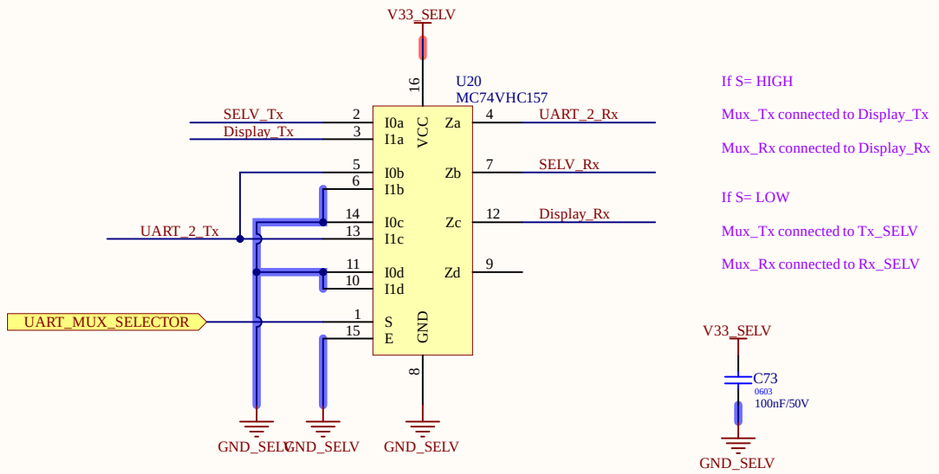

Infineon Technologies AG **Max-Planck-Str. 5,** 59581 Warstein, Germany			
Title	U109_22kW_GPDInverter_SELV_Interfaces		
Variant	Default_Assembly	Approved	<Appr.>
Size: A3	Document Name: 16_UART_MUX.SchDoc	Rel.	Rev. 1.5
Author:			
Date: 02.11.2022 Time: 13:31:25	SVN Revision: Not in version control		
© Infineon Technologies AG 2020. All Rights Reserved.	Sheet of		

17_STO.SchDoc

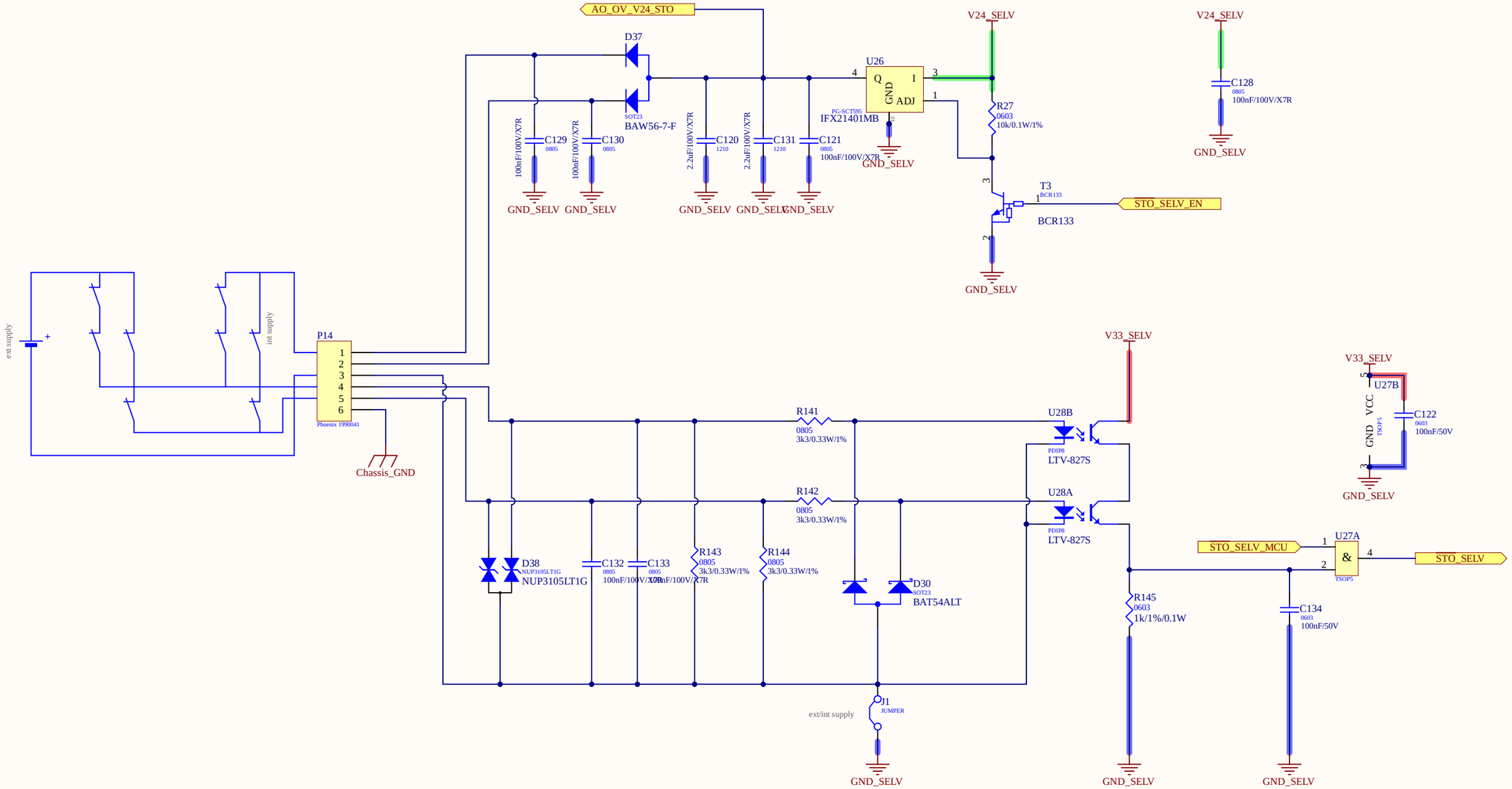

Infineon Technologies AG	
Max-Planck-Str. 5,	
59581 Warstein, Germany	
Title	U109_22kW_GPDInverter_SELV_Interfaces
Variant	Default_Assembly
Approved	<Appr.>
Size: A3	Document Name: 17_STO.SchDoc
Rel.	
Rev.	1.5
Author:	
Date: 02.11.2022 Time: 13:31:25	SVN Revision: Not in version control
© Infineon Technologies AG 2020. All Rights Reserved.	Sheet of

18_EtherCAT_IF_PORT_OUT.SchDoc

ECAT PORT OUT

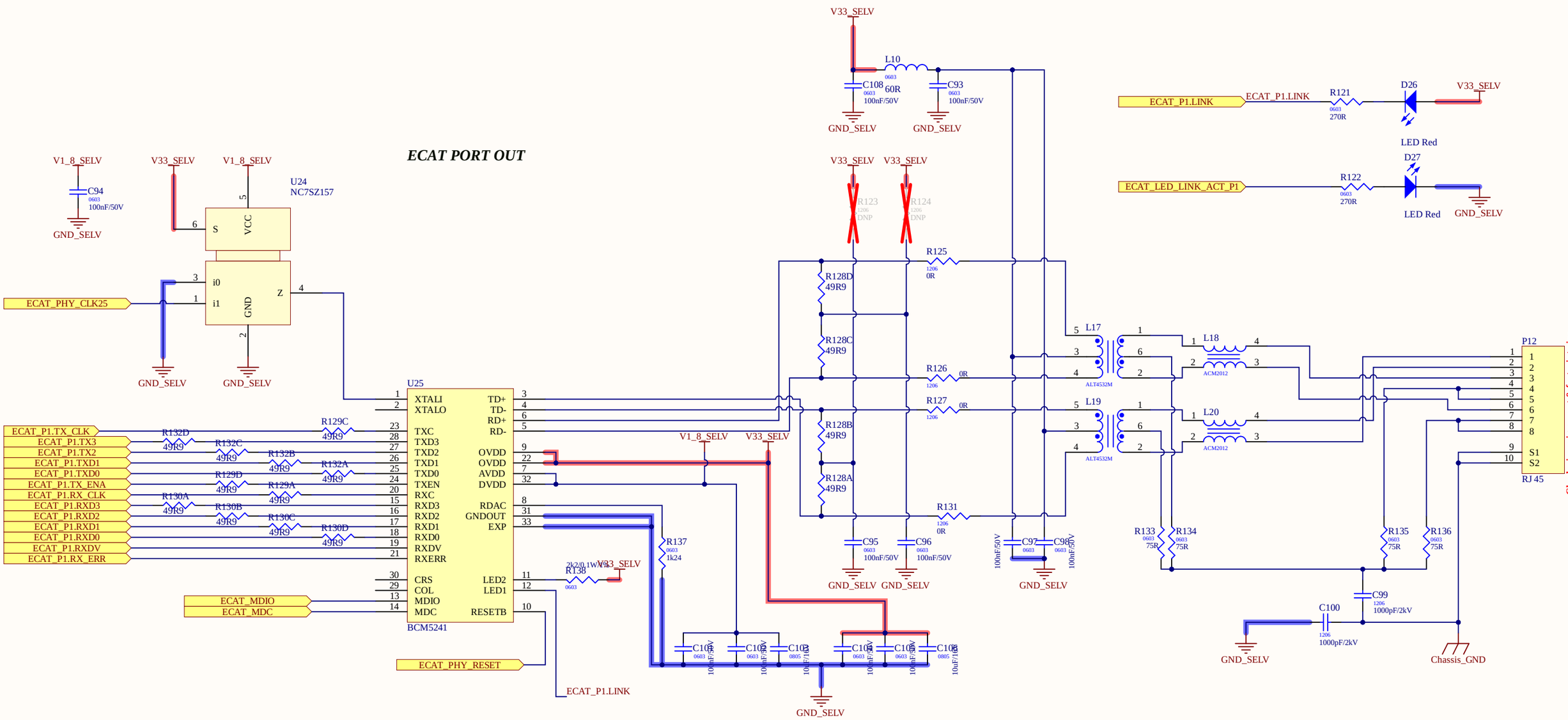

ECAT PORT OUT

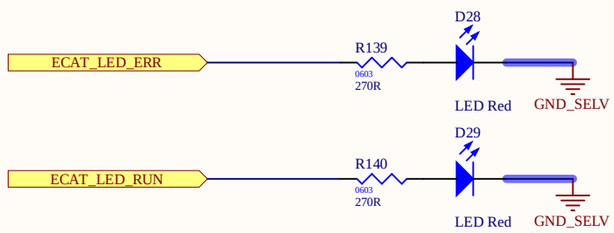

Not used

R129B
49R9

Infineon Technologies AG **Max-Planck-Str. 5,** 59581 Warstein, Germany			
Title	U109_22kW_GPDInverter_SELV_Interfaces		
Variant	Default_Assembly	Approved	<Appr.>
Size: A3	Document Name: 18_EtherCAT_IF_PORT_OUT.SchDoc	Rel.	Rev. 1.5
Author:			
Date: 02.11.2022 Time: 13:31:26	SVN Revision: Not in version control		
© Infineon Technologies AG 2020. All Rights Reserved.	Sheet of		

Miscellaneous.SchDoc

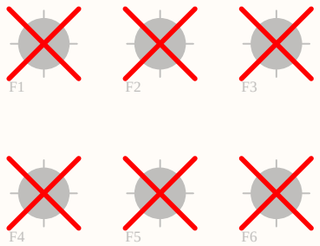

Infineon Technologies AG
Max-Planck-Str. 5,
59581 Warstein, Germany

Title	U109_22kW_GPDInverter_SELV_Interfaces		
Variant	Default_Assembly	Approved	<Appr.>
Size: A3	Document Name: Miscellaneous.SchDoc	Rel.	Rev. 1.5
Date: 02.11.2022	Time: 13:31:26	Author:	Sheet of

© Infineon Technologies AG 2020. All Rights Reserved.

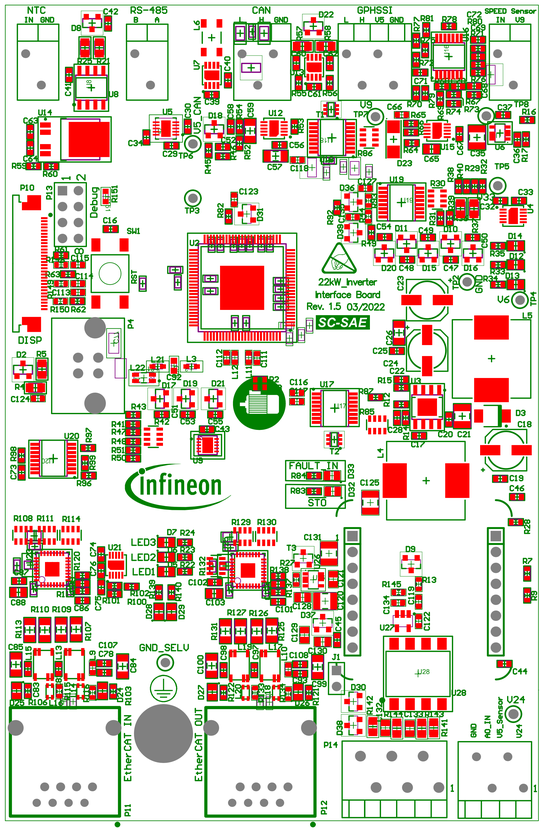

Infineon Technologies AG IFAG IPC IPB D SE Max-Planck-Str. 5, 59581 Warstein, Germany	ENGINEER:	TITLE: U109_22kW_GPDInverter_SELV_Interfaces	
	PCB DESIGNER:		
	DATE: 02.11.2022	PART NO.:	REL: <Rel.> / REV: Rev. 1.5
	SVN REVISION: Not in version control	FILE NAME: U109_22kW_Inverter_Interfaces.PcbDoc	APRV: <Appr.> / SCALE: 1:1

© Infineon Technologies AG 2020. All Rights Reserved.

Infineon Technologies AG IFAG IPC IPB D SE Max-Planck-Str. 5, 59581 Warstein, Germany	ENGINEER:		TITLE: U109_22kW_GPDInverter_SELV_Interfaces
	PCB DESIGNER:		
	DATE: 02.11.2022	PART NO.:	REL.: <Rel.> REV: Rev. 1.5
	SVN REVISION: Not in version control	FILE NAME: U109_22kW_Inverter_Interfaces.PcbDocApp.>	APPV: SCALE: 1:1

© Infineon Technologies AG 2020. All Rights Reserved.