Whitepaper
03-2022

EZ-PD™ PMG1 high voltage MCU as a co-processor for embedded applications

Building multiprocessor system solutions for system and power management

Abstract

EZ-PD™ PMG1, a family of High Voltage Microcontrollers (MCUs) with USB-C Power Delivery (PD), supports embedded firmware engineers and system designers to adopt USB-C into applications such as smart speakers, IoT hubs, home appliances, internet gateways, power and garden tools.

This article targets embedded firmware engineers and system designers interested in including USB-C in their embedded applications. Infineon's EZ-PD™PMG1 MCUs provide an integrated solution for embedded systems that supply/consume power from the USB-C port and need an MCU to implement product features.

by
Anand Kannan, Product Marketing Manager for EZ-PD™ PMG1 high voltage microcontrollers, and
Shopitham Ram, Applications Engineer for EZ-PD™ PMG1 high voltage microcontrollers, both at Infineon Technologies

Table of contents

1 Introduction

USB-C ports have become the connector of choice for consumer electronics and soon will be the default connector for embedded applications. This whitepaper is intended for embedded firmware engineers and system designers interested in including USB-C ports into their embedded applications. This whitepaper series provides system-level solutions for the evolving USB-C ecosystem based on EZ-PD™ PMG1 High Voltage Microcontrollers.

As the world transitions to USB-C-based DC power sources, more and more applications are expected to adopt USB-C ports for sourcing or sinking power. Infineon's EZ-PD™ PMG1 is a family of high voltage Microcontrollers (MCU) with USB-C Power Delivery (PD) with Integrated Arm® Cortex® M0/M0+ CPUs with up to 256 KB Flash, up to 32 KB RAM, a USB full-speed device, and programmable analog and digital peripherals to interface with various sensors and perform system functions. EZ-PD™ PMG1 also integrates high-voltage circuits up to 28 V (such as regulators, FET gate drivers, and fault protection for overvoltage and overcurrent) to enable a robust, easy-to-use solution while reducing BOM cost through integration.

Figure 1 shows Infineon's portfolio of EZ-PD™ PMG1 MCUs and their features, flash size, RAM and GPIO. The product datasheets for these devices can be found on the EZ-PD™ PMG1 web page. System designers can choose the MCU based on the features and flash size requirements of their end application.

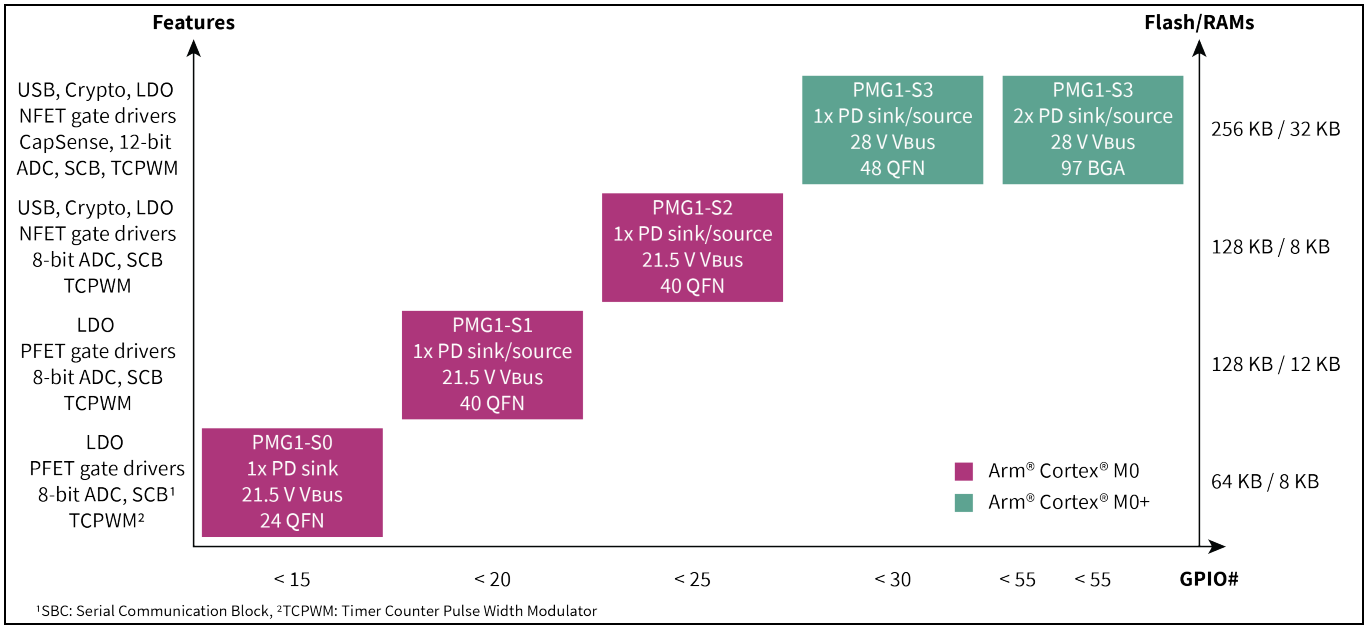

Figure 1 EZ-PD™ PMG1 MCU product portfolio

The first white paper in this series discussed how Infineon's EZ-PD™ PAG1 and PMG1 families provide end-to-end solutions for DC power source and sink.

This white paper discusses how PMG1 MCUs can be used as a co-processor in multiprocessor systems for System and Power Management. It includes a system solution using PMG1-S1 showcasing PMG1-S1's integration of USB-C PD along with high voltage protection circuits for system protection, 8-bit ADC and Timers for voltage monitoring, control and power sequencing, serial interfaces for communication with the Primary processor/FPGA, and a USB Mux with legacy-charger support to enable USB HS data communication with the primary processor.

2 EZ-PD™ PMG1 as a system co-processor for embedded applications

This section shows EZ-PD™ PMG1 as a co-processor in a system with another CPU/FPGA. Imagine an embedded system like a portable smart speaker with audio assistants powered from USB-C.

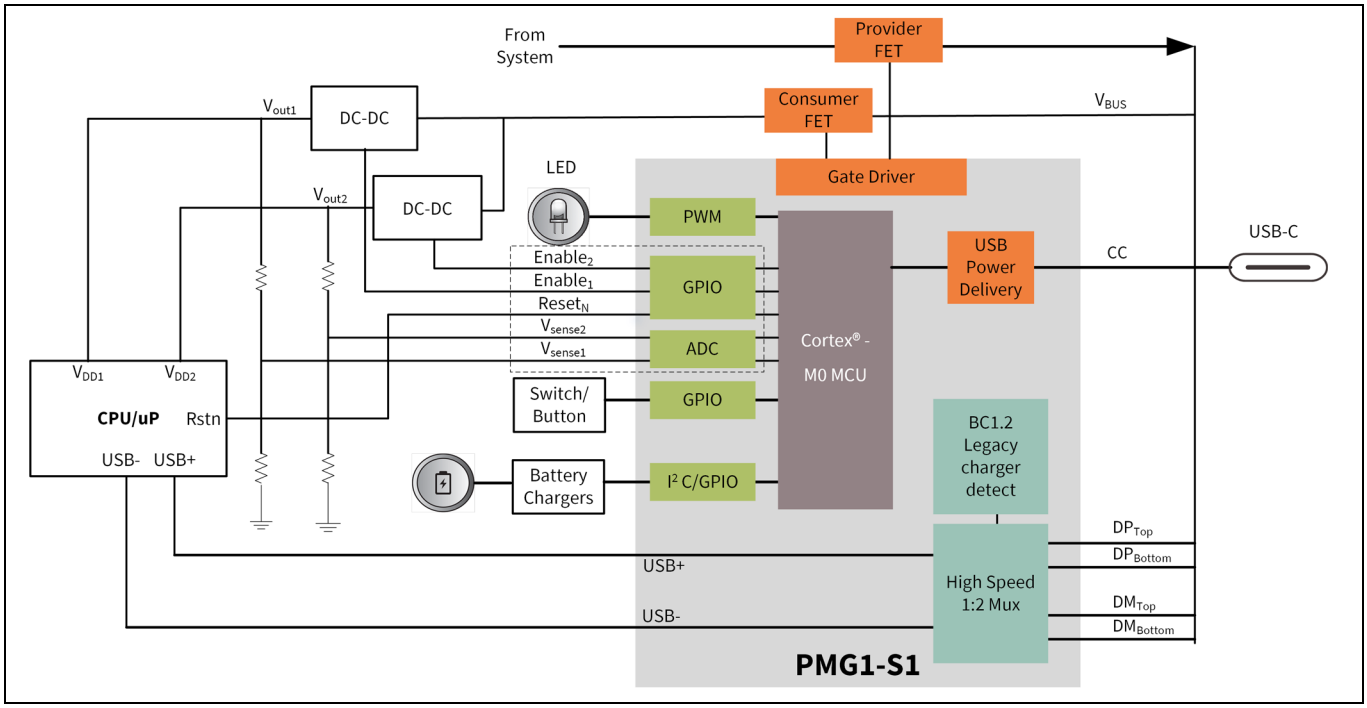

Figure 2 PMG1-S1 as a system management controller

These speakers come with the main MCU that handles the core functions of the audio assistant, runs the NLP algorithm, connects to the cloud, and streams the music. The USB-C port in the portable speaker is used to sink power to the battery charging subsystem and sometimes source power to the outside world over USB-C as a power bank would. The battery in the speaker is charged when an AC-DC power adaptor is plugged into the USB-C port. The battery in the system can now source power and charge a smartphone plugged into the USB-C Port. In these systems, there is a need for a USB-C controller that integrates the below functions:

- A USB-C Power delivery controller to sink/source power.
- A USB controller with support for legacy charging using BC1.2 when plugged into legacy USB connectors.
- An integrated mux that allows high-speed USB communication between the main processor and an external host connected to the USB-C connector for firmware updates and system debugging.
- High-voltage protection circuits to protect the system when sinking or sourcing power.
  - Overvoltage and Undervoltage Faults when sourcing and sinking power.
  - Overcurrent, short-circuit protection and reverse current protection when sourcing power.
  - Short-circuit protection between CC and V_{BUS} lines on the Type-C connector.
- Serial interfaces, timers, ADCs & GPIO that enables System Monitoring and control, including
  - Power sequencing – In multiple power rail systems.

- Voltage monitoring – Voltage monitoring on V_{BUS}, battery voltage monitoring.
- Brownout detection – Detect brownout of main processor/FPGA.
- System reset control – Initiate system Reset based on fault detection.

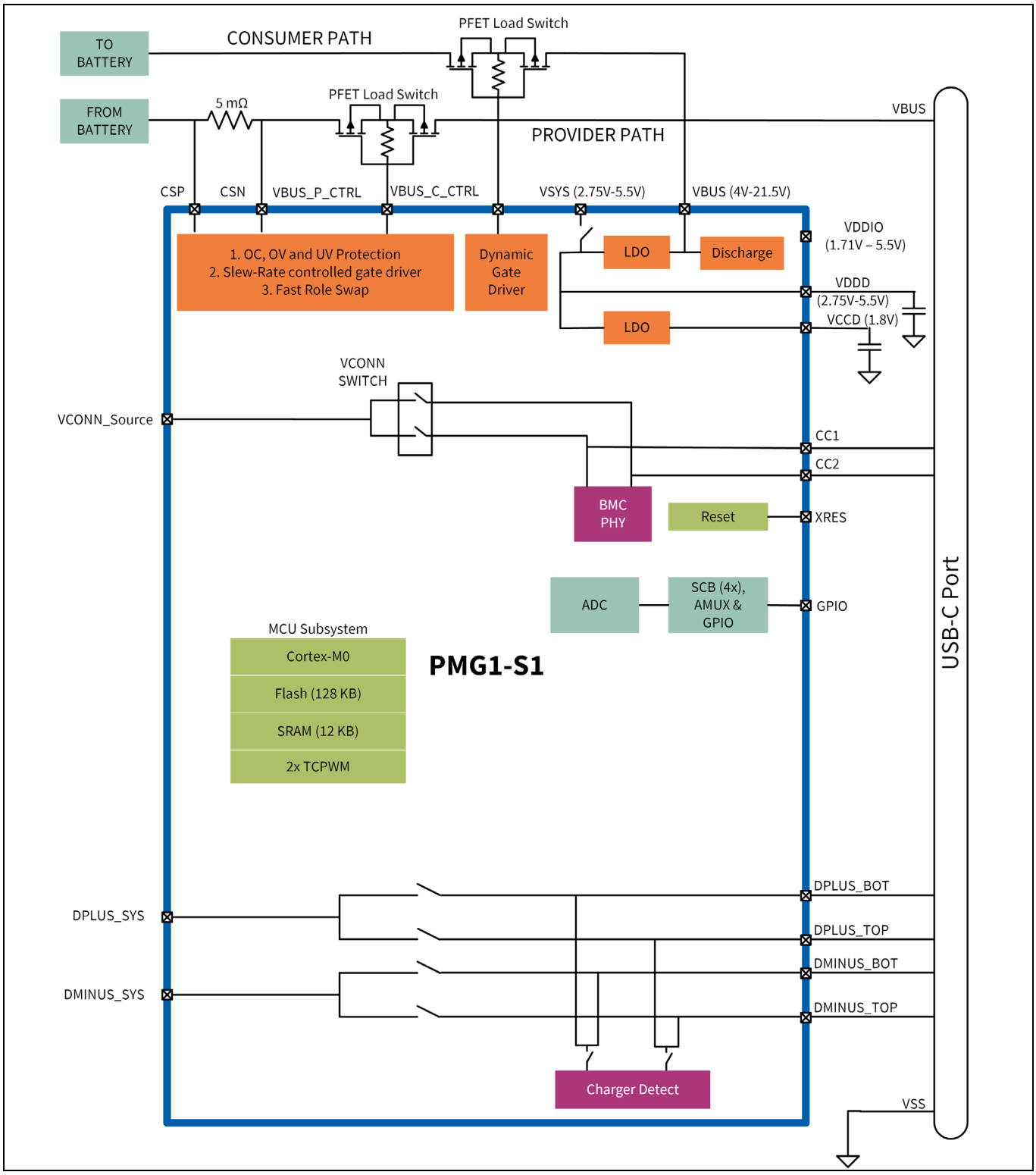

Figure 3 PMG1-S1 block diagram

The system monitoring and control functions listed above can be implemented using PMG1-S1. Figure 3 shows the functional block diagram of PMG1-S1.

The USB PD block in the EZ-PD™ PMG1-S1 is used for USB Type-C source/Sink attach detection and negotiating a power delivery contract. This includes the BMC PHY, slew rate-controlled gate drivers for the source and sink side FETs, overvoltage, undervoltage, overcurrent, and short circuit protection circuits.

PMG1-S1 integrates a high-speed USB Mux. The HS mux contains a 2×1 cross bar switch to route the Core MCU's DP and DM lines to the Type-C top or bottom port based on the CC (Type-C plug) orientation. The USB 2.0 mux also contains charger detection/emulation for detecting USB BC1.2 and Apple terminations.

The USB-PD subsystem contains one 8-bit 125 ksps successive approximation register analog-to-digital converter (SAR ADC). All GPIOs on the chip have access to the ADC through the chip-wide analog mux bus.

EZ-PD™ PMG1-S1 has 17 general-purpose IOs that can be used for system functions. It also has 2 TCPWM blocks which can be configured as timers, counters, or PWMs. The GPIOs, along with the ADCs and Timers, counters can be used for the Voltage Monitoring and control functions listed above.

The EZ-PD™ PMG1-S1 has four configurable serial communication blocks (SCBs) that can be configured as I2C, SPI, or UART. The SCBs, TCPWMs, and GPIOs can be easily configured using a simple GUI called the Device configurator tool available in ModusToolbox™. The I2C can be configured to run at 100 kHz, 400 kHz, or 1 MHz. The system designers can integrate various sensors, based on their application through either I2C or SPI, with the EZ-PD™ PMG1-S1. These serial interfaces can be used to communicate with the Core Processor/FPGA, battery charging ICs, and other sensors in the end application.

All of this is accomplished using the ModusToolbox™. ModusToolbox™ is Infineon's firmware development environment with Windows, macOS, and Linux support. For more details, please refer to ModusToolbox™ online web page.

The EZ-PD™ PMG1-S1 shown in Figure 3 is accompanied by a ModusToolbox™ project that includes firmware libraries, source code, and the necessary documentation to get system engineers started with the EZ-PD™ PMG1. The ModusToolbox™ IDE with the EZ-PD™ PMG1 SDK, prototyping kits, and quick start guides makes firmware development and debugging simple and easy, significantly reducing development time and time-to-market.

Refer to "Getting started with EZ-PD™ PMG1 MCU on ModusToolbox™ software" Application Note to see how it can be used to develop firmware applications for the EZ-PD™ PMG1. This example solution is supported on the EZ-PD™ PMG1-S0, PMG1-S1, PMG1-S2, and PMG1-S3 boards. Remember to use the appropriate EZ-PD™ PMG1 Board Support Package (BSP) in ModusToolbox™.

3 Summary

Infineon's end-to-end USB-C solutions enable easy integration of USB-C PD ports into embedded applications by providing a market-proven USB-C PD stack and ensuring spec compliance and interoperability. Consequently, embedded firmware engineers and system designers can focus their efforts on developing applications using the ARM® Cortex® MCU on the EZ-PD™ PMG1.

The integration of ARM® Cortex® M0/M0+, up to 256 KB flash memory, 32 KB SRAM, USB full-speed device, programmable GPIOs, gate drivers, LDOs, protection circuits, and a USB-IF certified USB-C PD in EZ-PD™ PMG1 leads to a single chip solution with a reduced overall bill of materials (BOM) for customers.

The next whitepaper of this series discusses how EZ-PD™ PMG1-S3 can be used as the system MCU in embedded applications that require high power up to 140 W (28V, 5A) as per USB-PD 3.1 specification.

References

[1] USB Power Delivery specification, https://usb.org/document-library/usb-power-delivery

www.infineon.com

Published by
Infineon Technologies AG
Am Campeon 1-15, 85579 Neubiberg
Germany

© 2022 Infineon Technologies AG.
All rights reserved.

Document number: B191-I1260-V1-7600-NA-EC
Date: MM / 2022

Please note!
This Document is for information purposes only and any information given herein shall in no event be regarded as a warranty, guarantee or description of any functionality, conditions and/or quality of our products or any suitability for a particular purpose. With regard to the technical specifications of our products, we kindly ask you to refer to the relevant product data sheets provided by us. Our customers and their technical departments are required to evaluate the suitability of our products for the intended application.

We reserve the right to change this document and/or the information given herein at any time.

Additional information
For further information on technologies, our products, the application of our products, delivery terms and conditions and/or prices please contact your nearest Infineon Technologies office (www.infineon.com).

Warnings
Due to technical requirements, our products may contain dangerous substances. For information on the types in question, please contact your nearest Infineon Technologies office.

Except as otherwise explicitly approved by us in a written document signed by authorized representatives of Infineon Technologies, our products may not be used in any life-endangering applications, including but not limited to medical, nuclear, military, life-critical or any other applications where a failure of the product or any consequences of the use thereof can result in personal injury.