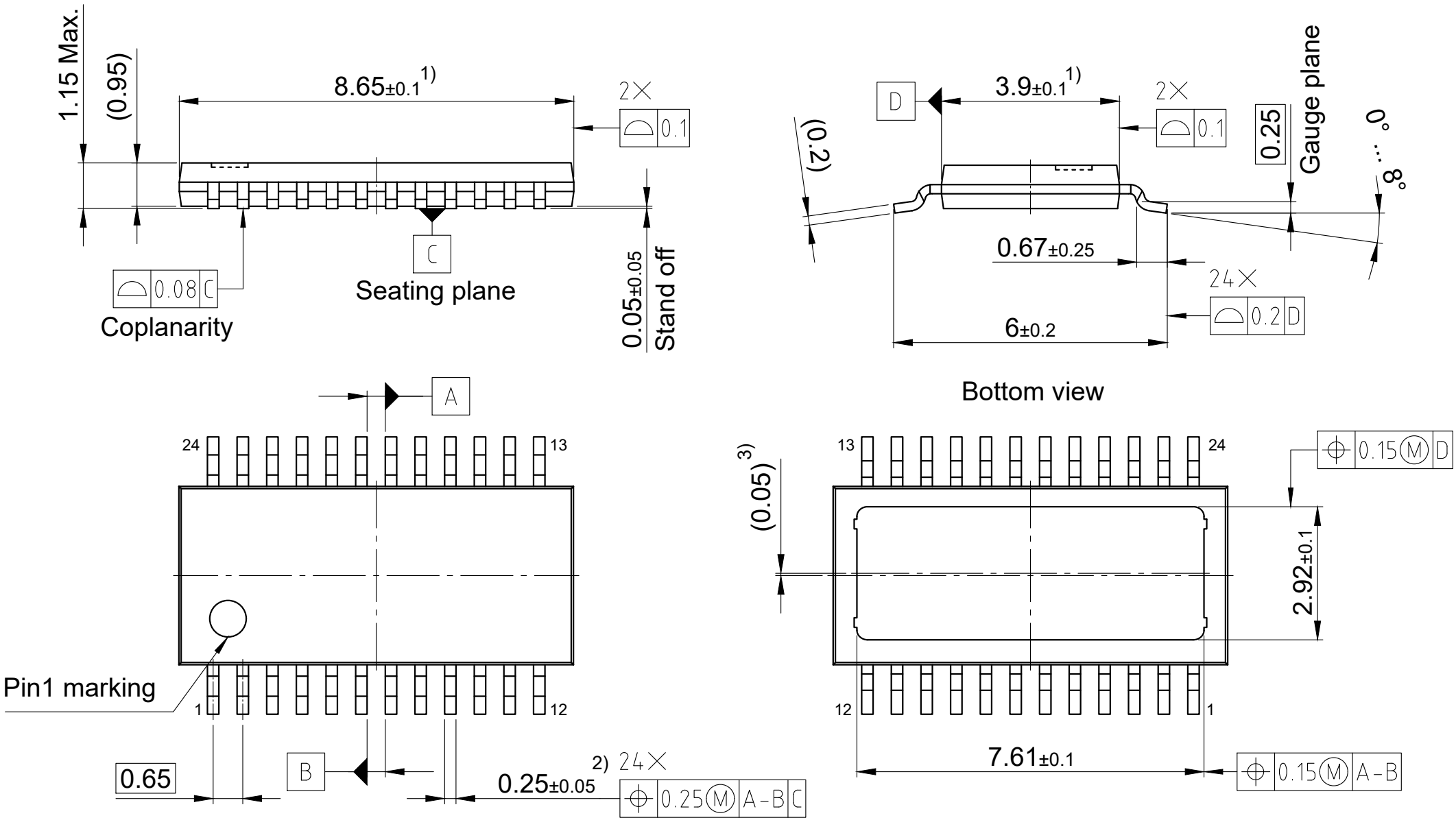


1) Does not include plastic or metal protrusion of 0.15 max. per side
2) Dambar protrusion shall be maximum 0.1 mm total in excess of lead width.
3) Distance from centerline exposed pad to package centerline
All dimensions are in units mm
The drawing is in compliance with ISO 128-30, Projection Method 1 [ ]
Drawing according to ISO 8015, general tolerances ISO 2768-mK