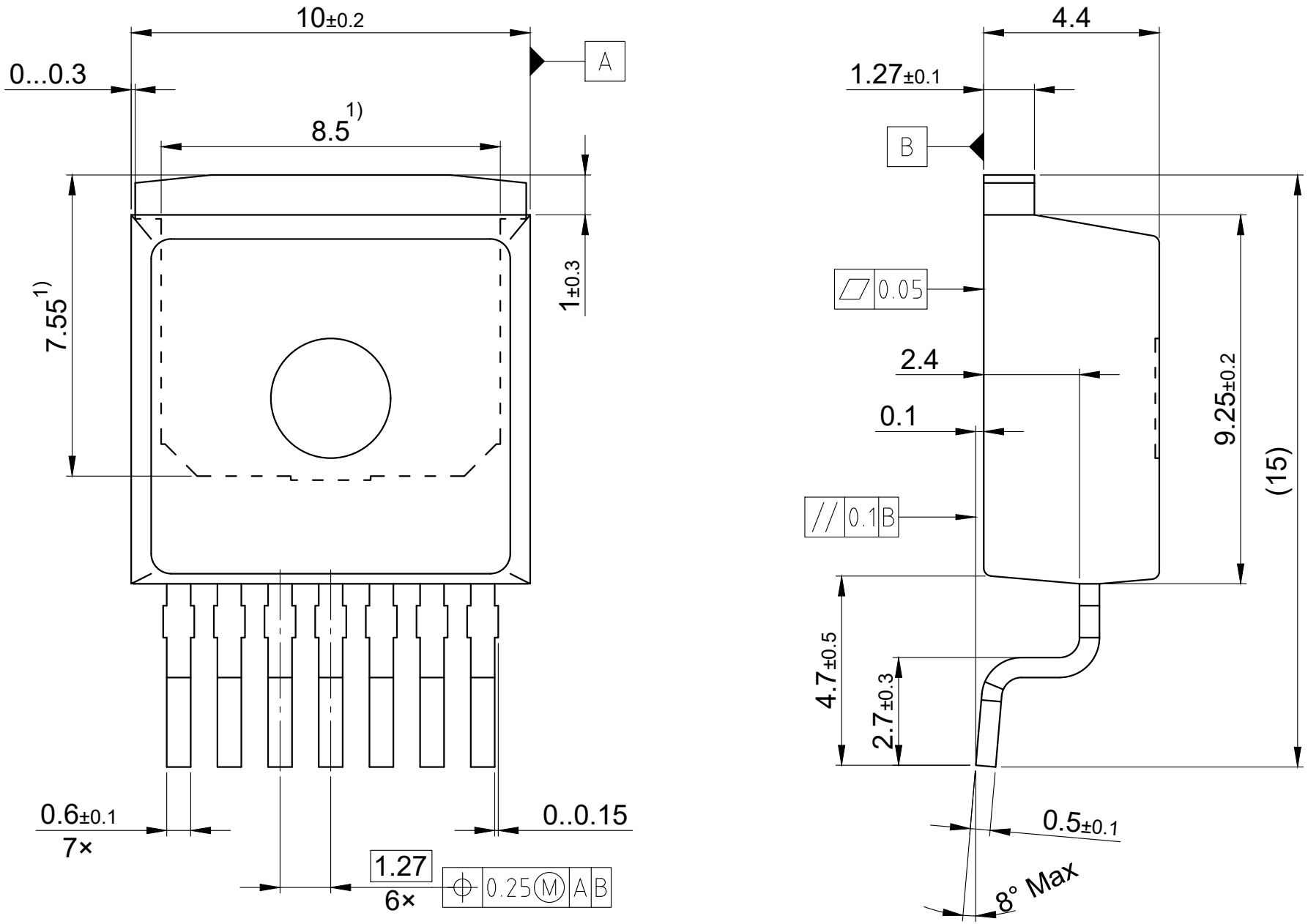

1) Typical metal surface min. x= 7.25,y= 6.9
All metal surfaces: tin plated, except area of cut
All dimensions are in units mm
The drawing is in compliance with ISO 128-30, Projection Method 1 [ ]