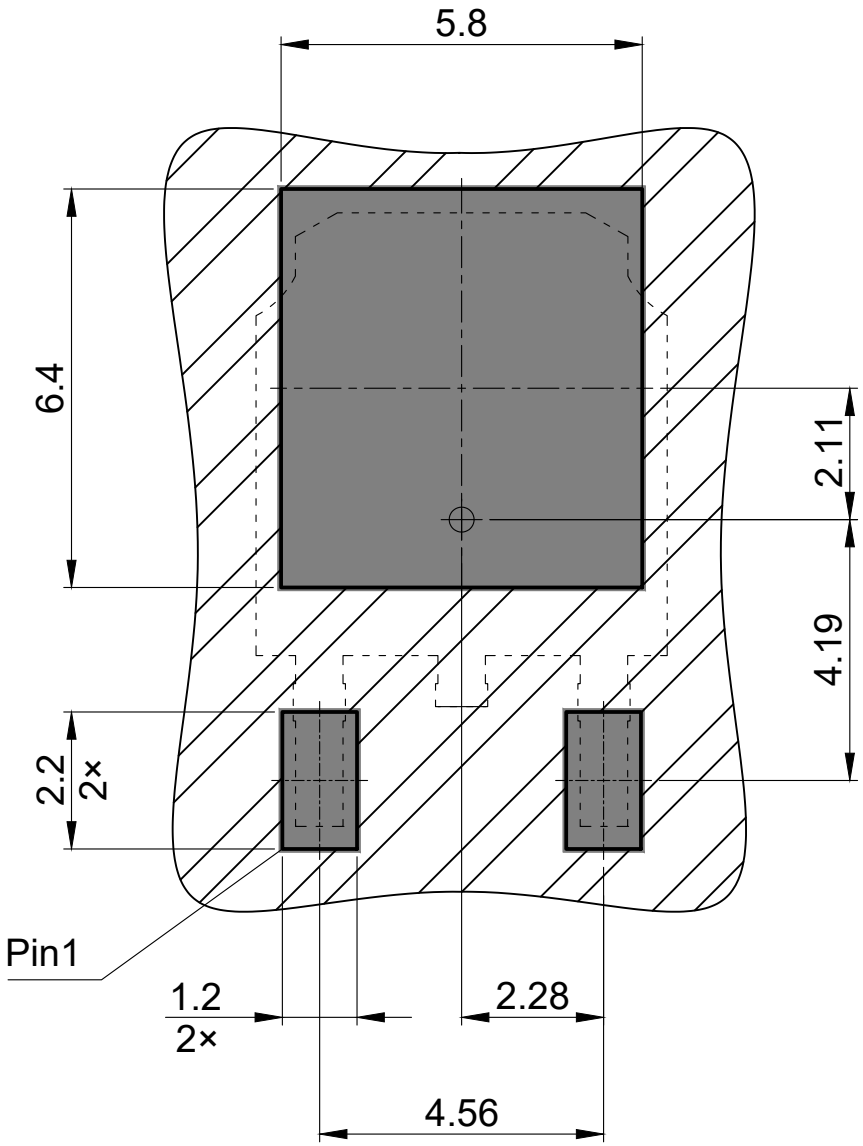

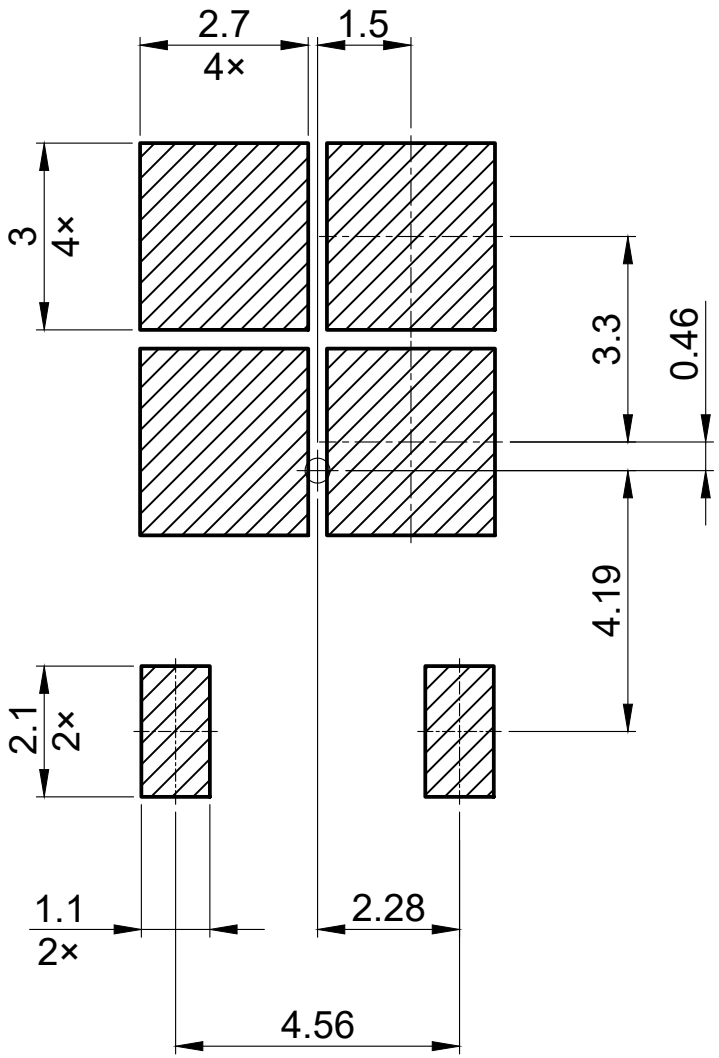

copper

solder mask

stencil apertures

All pads are solder mask defined
All dimensions are in units mm