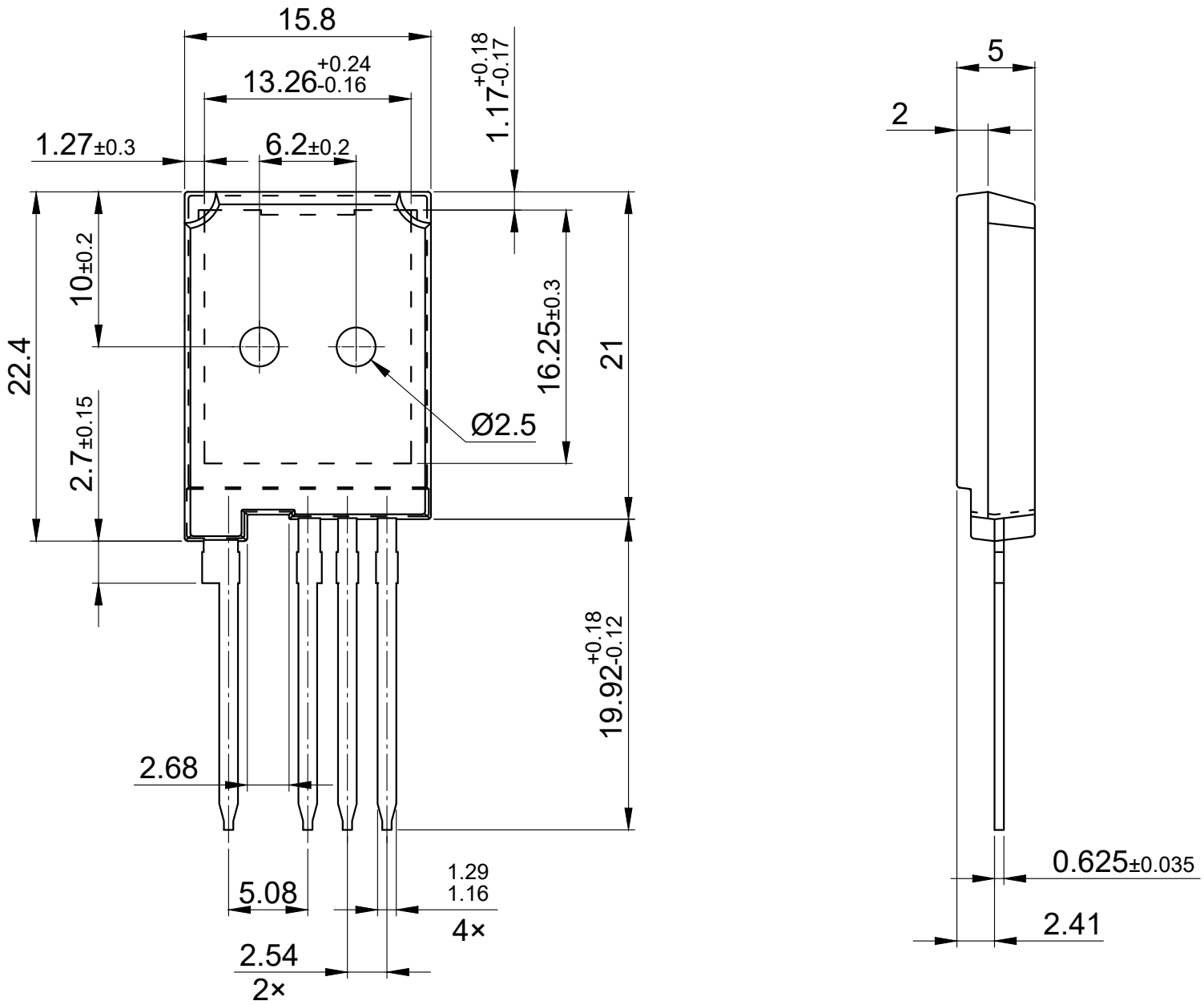

1) All dimensions refer to JEDEC standard TO-247 do not include mold flash or protrusions
All dimensions are in units mm
The drawing is in compliance with ISO 128-30, Projection Method 1 [ ]