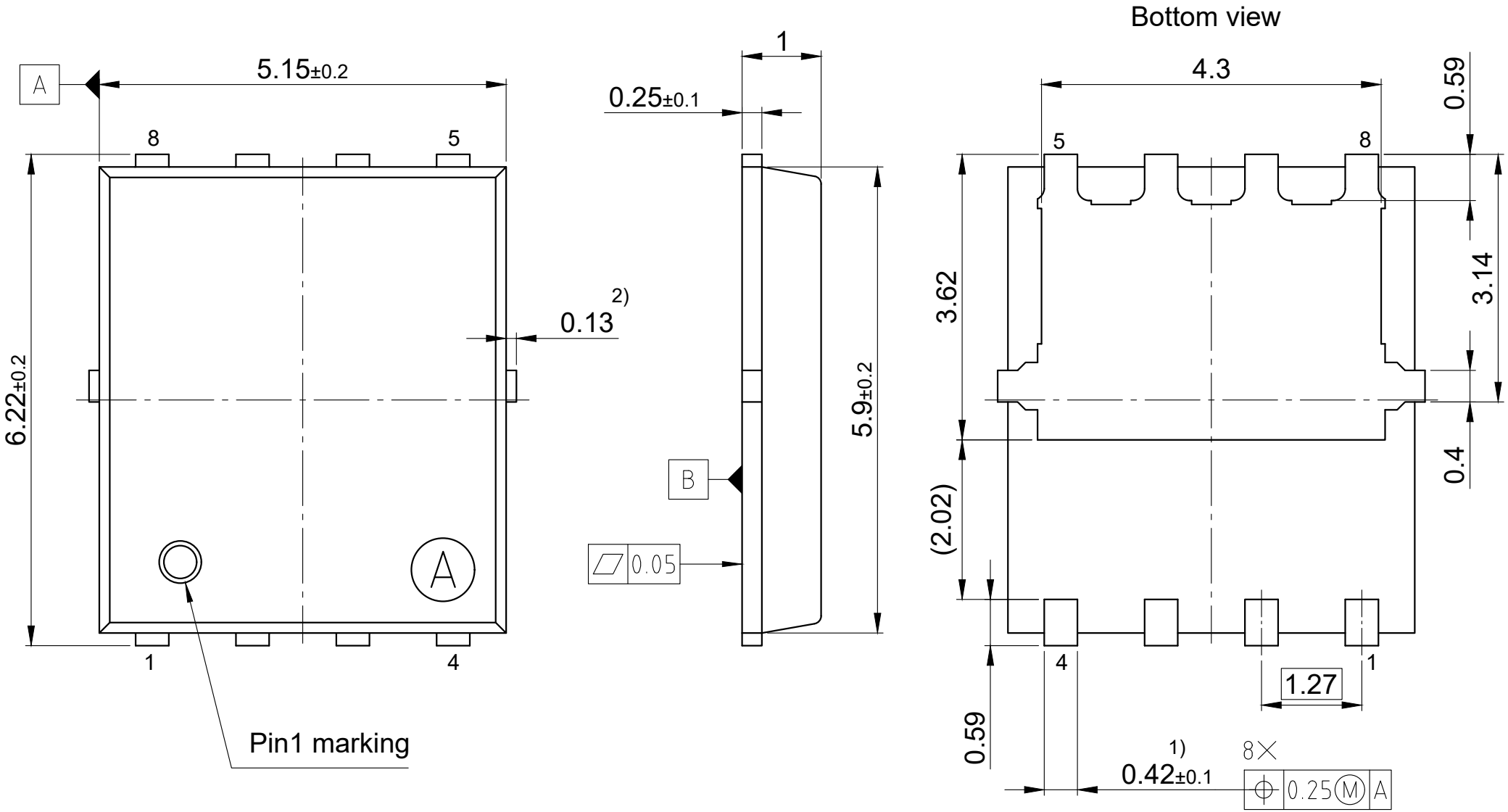

1) Excluded mold flash
2) Removal on mold gate: Intrusion 0.1mm, Protusion 0.1mm
3) Lead length up to anti flash line
4) All metal surfaces are plated, except area of cut
All dimensions are in units mm
The drawing is in compliance with ISO 128-30, Projection Method 1 [ ]