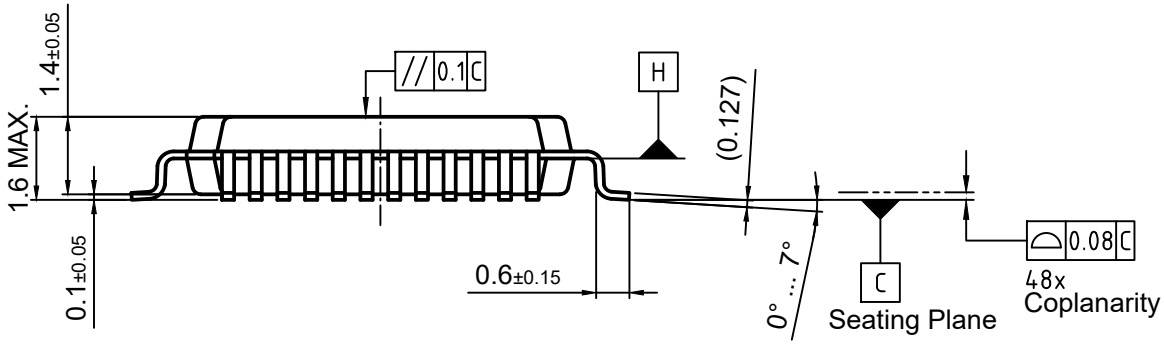

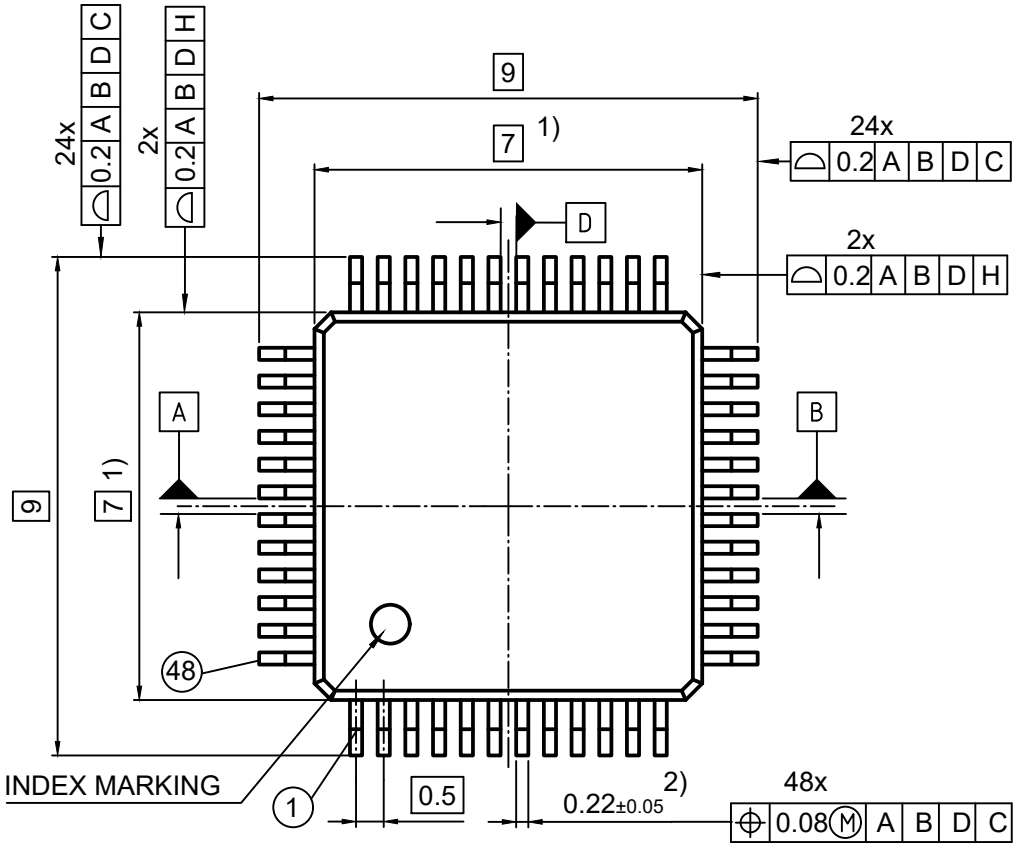

All dimensions are in units mm

The drawing is in compliance with ISO 128-30, Projection Method 1[ ]

1) Does not include mold protrusion of 0.254 mm Max.

2) Does not include dambar protrusion of 0.08 mm Max.