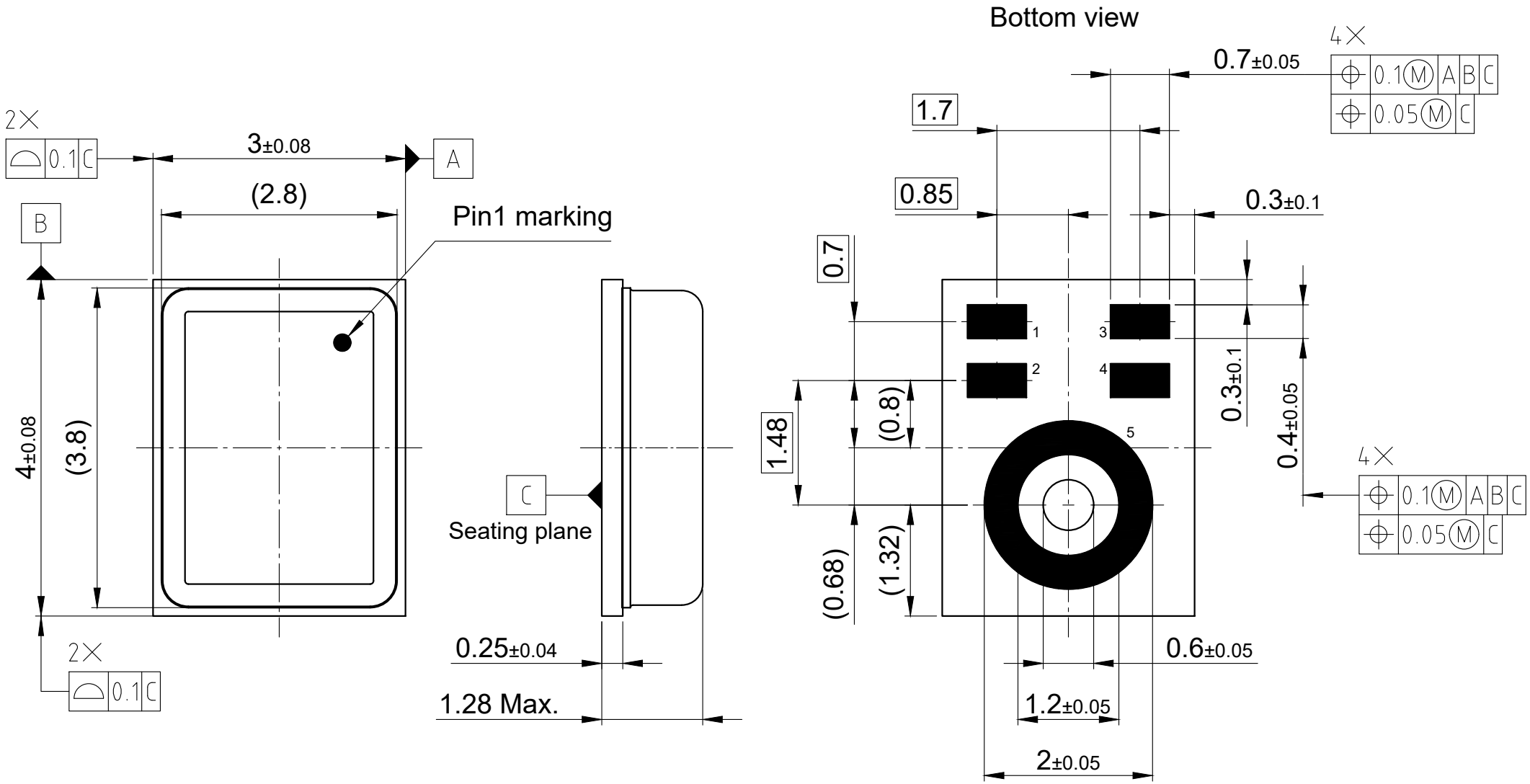

All dimensions are in units mm
The drawing is in compliance with ISO 128-30, Projection Method 1 [ ]
Drawing according to ISO 8015,general tolerances ISO 2768-mK