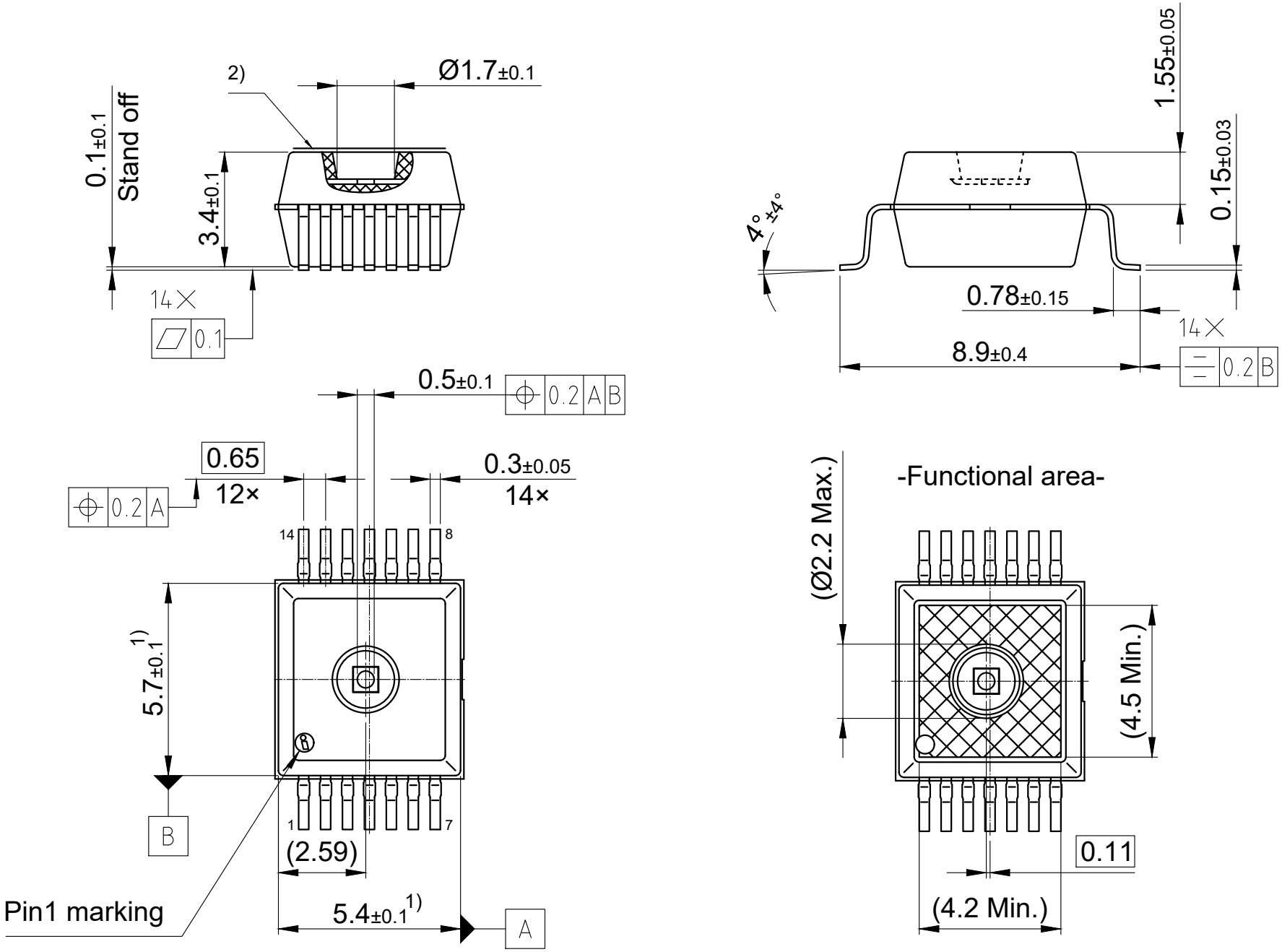

1) Outer dimensions does not include protrusion or intrusion of 0.15mm per side.

2) Ra 0.4...1.2 on molded surface functional area.(excluding lasermarking and pin 1 marking).

All dimensions are in units mm

The drawing is in compliance with ISO 128-30, Projection Method 1 [ ]

Drawings according to ISO 8015 general tolerances