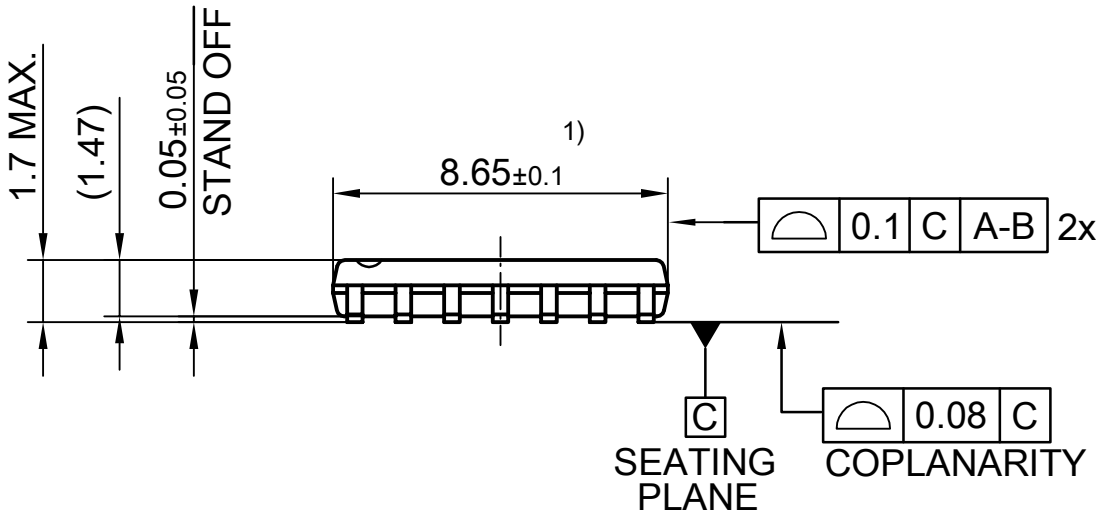

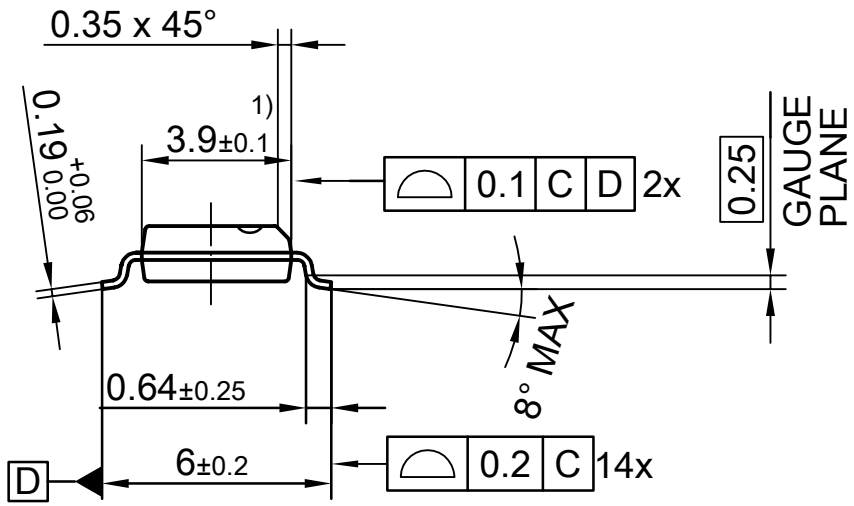

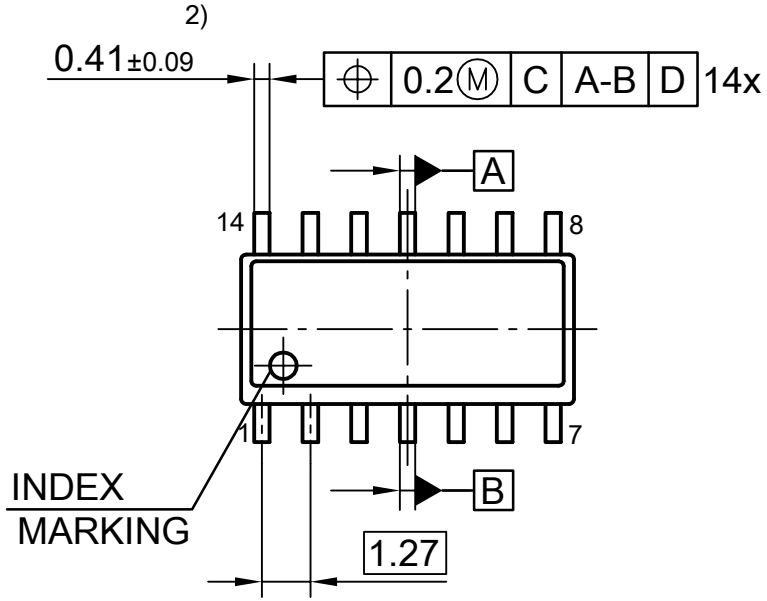

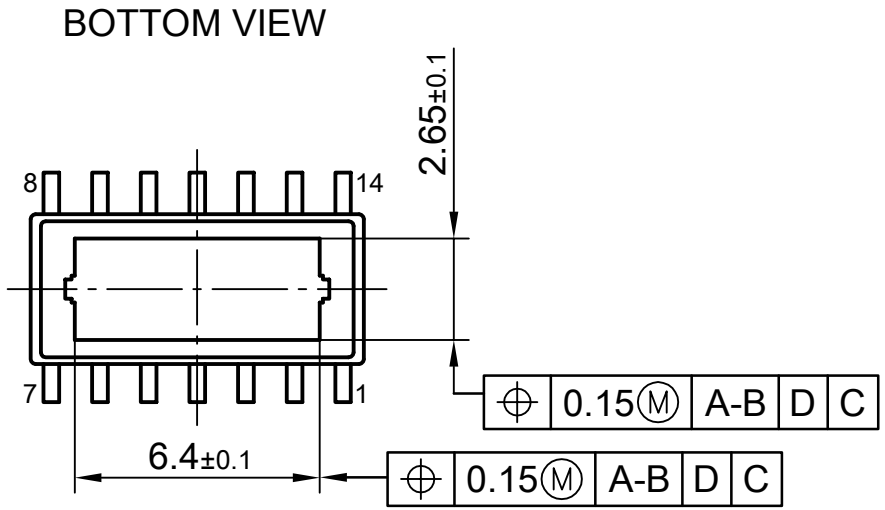

1) DOES NOT INCLUDE PLASTIC OR METAL PROTRUSION OF 0.15 MAX. PER SIDE
2) DOES NOT INCLUDE DAMBAR PROTRUSION OF 0.13 MAX.

ALL DIMENSIONS ARE IN UNITS MM
THE DRAWING IS IN COMPLIANCE WITH ISO 128 & PROJECTION METHOD 1 [ ]