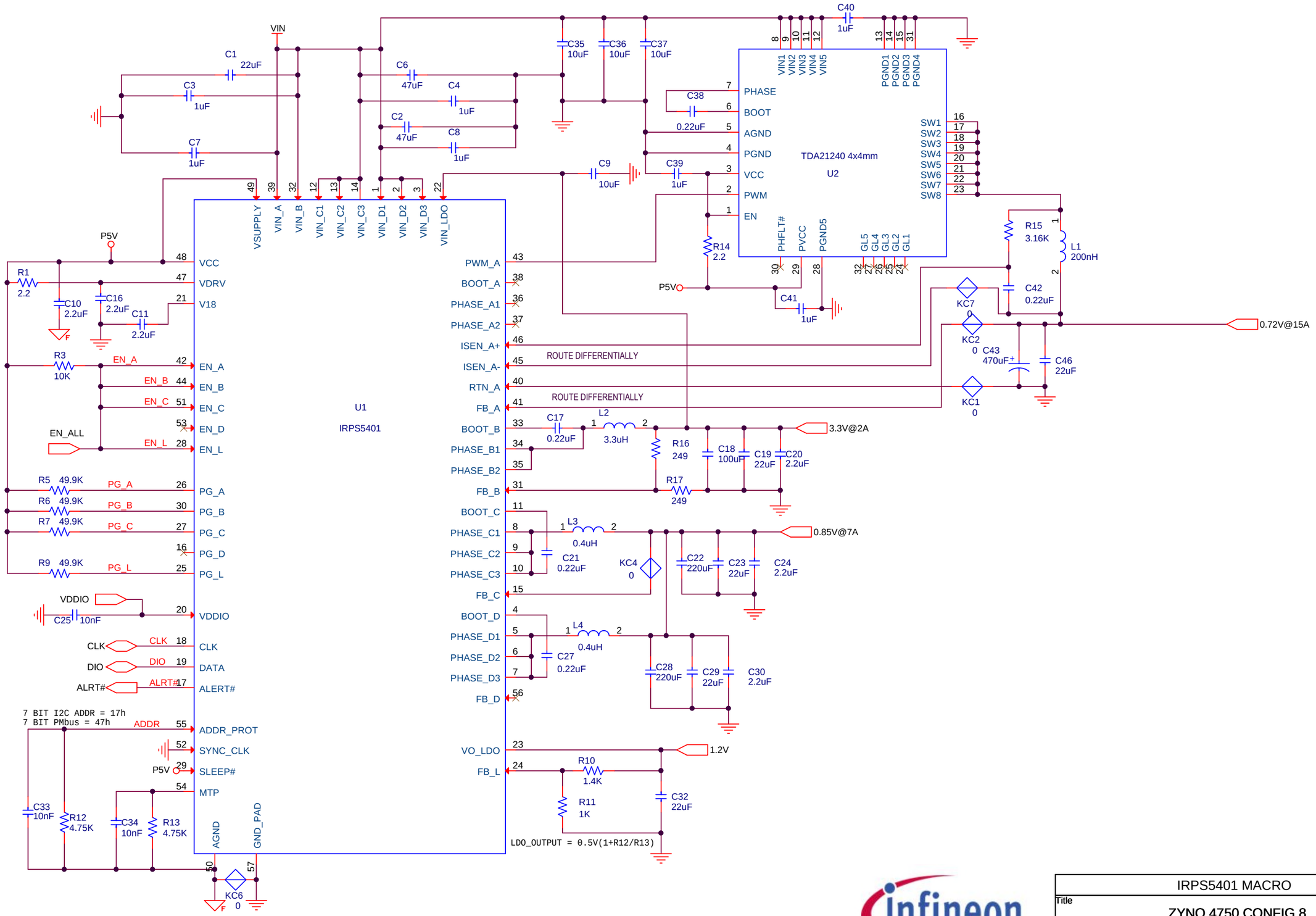

MACRO

Title	IRPS5401 MACRO ZYNQ 4750 CONFIG 8
Size	B
Document Number	EV113-008
Rev	-
Date:	Thursday, July 27, 2017
Sheet	1 of 1