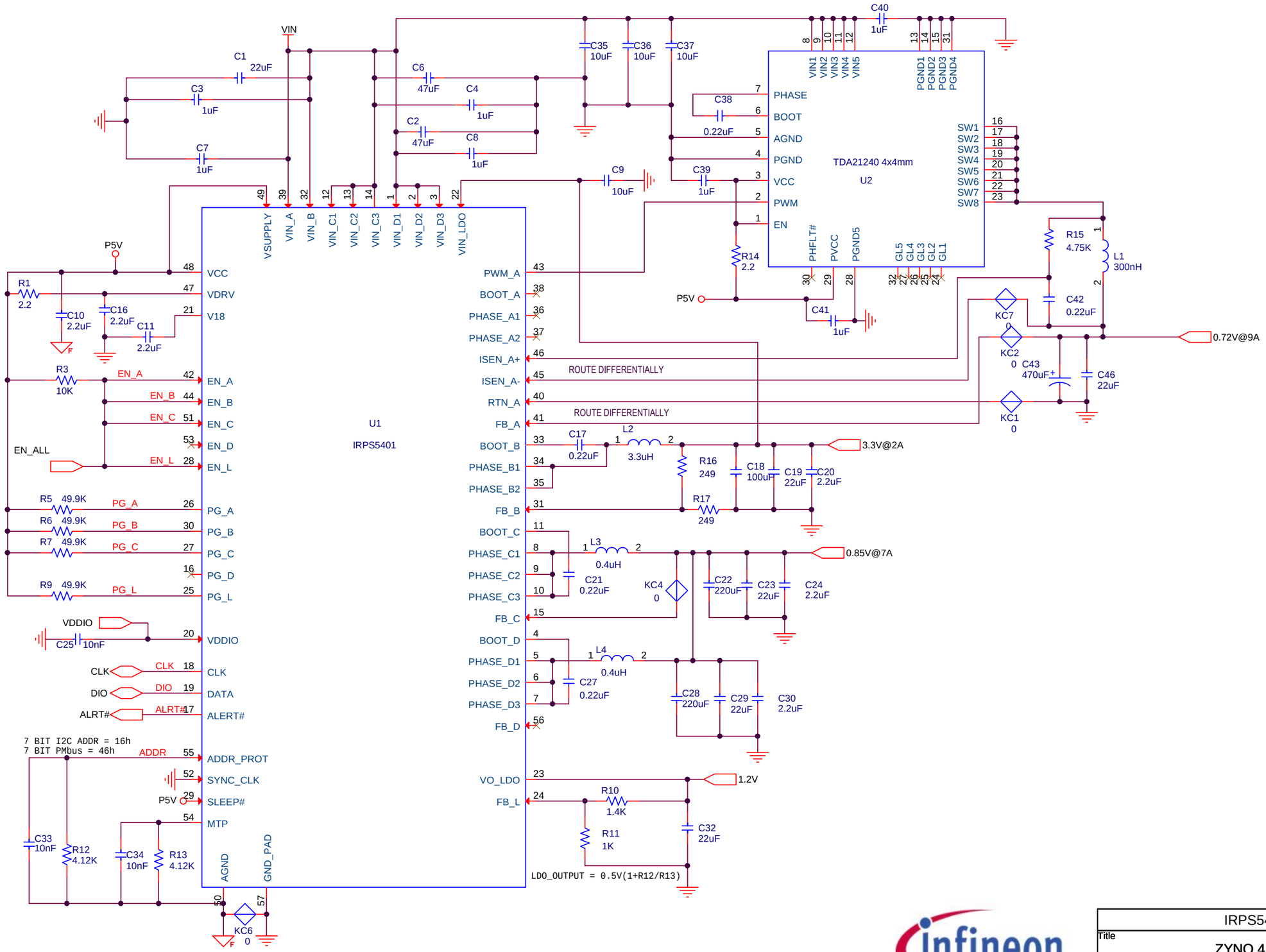

MACRO

Title	IRPS5401 MACRO
	ZYNQ 4120 CONFIG 7
Size	B
Document Number	EV113-007
Rev	-
Date:	Wednesday, July 26, 2017
Sheet	1 of 1