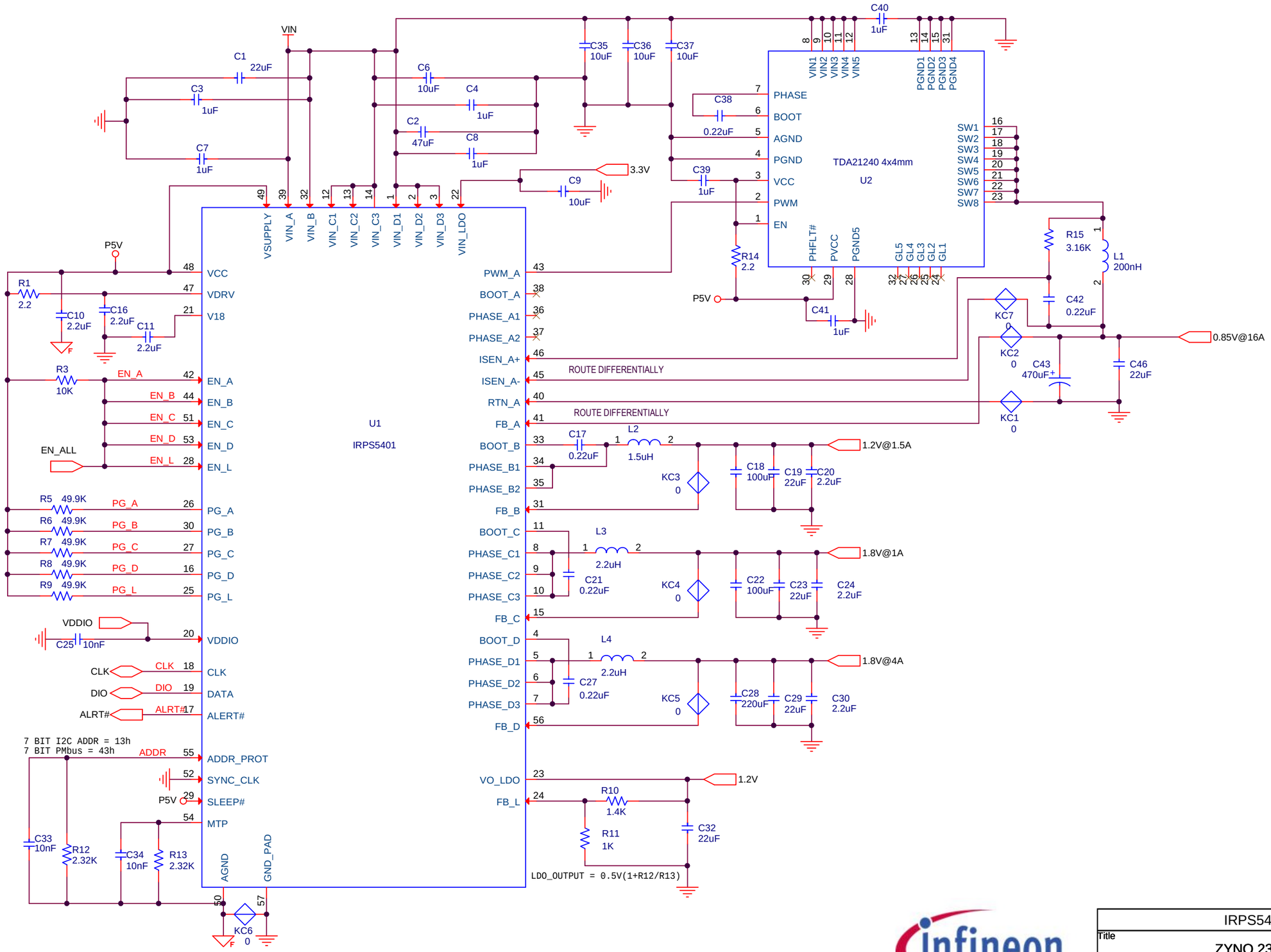

MACRO

Title	IRPS5401 MACRO ZYNQ 2320 CONFIG 4
Size	B
Document Number	EV113-004
Rev	-
Date:	Tuesday, July 25, 2017
Sheet	1 of 1