LED/SMPS FLYBACK CONTROL IC

Features

- High voltage fast startup
- Voltage mode control
- Critical-conduction / transition mode operation
- Constant voltage / current regulation
- High power factor / low iTHD
- Minimum off time (DCM at light load)
- Burst mode operation at very light load
- Cycle by cycle over-current protection
- Open load over voltage protection
- Micro-power startup (50µA)
- Low quiescent current
- Latch immunity and ESD protection
- Noise immunity

Typical Applications

- LED Drivers
- Power Supplies

Product Summary

Topology	Flyback
I_{o+} & I_{o-} (typical)	200 mA / 400 mA
t_r & t_f (typical)	60 ns / 30 ns

Package

8-Lead SOIC

IRS2982SPBF

Ordering Information

Base Part Number	Package Type	Standard Pack		Complete Part Number
		Form	Quantity	
IRS2982SPBF	SO8N	Tube/Bulk	95	IRS2982SPBF
		Tape and Reel	2500	IRS2982STRPBF

Table of Contents	Page
Description	3
Qualification Information	5
Absolute Maximum Ratings	6
Recommended Operating Conditions	6
Electrical Characteristics	7
Functional Block Diagram	9
State Diagram	10
Input / Output Pin Equivalent Circuit Diagram	11
Lead Definitions	12
Lead Assignments	12
Application Information and Additional Details	13
Performance Graphs	17
Package Details	21
Tape and Reel Details	22
Part Marking Information	23

Description

The IRS2982 is a versatile SMPS control IC designed to drive switching converters for LED drivers and power supplies. Features include; integrated high voltage start up, accurate temperature compensated internal reference, trans-conductance type error amplifier, primary sensed open circuit protection and cycle by cycle primary current limiting. The IRS2982 is compatible with Buck, Boost, Flyback and other SMPS circuit topologies and is able to regulate voltage or current directly or by secondary feedback through an opto-isolator. The high voltage startup cell enables the VCC supply to be derived initially from the DC bus until an auxiliary inductor winding or other supply source is able to take over enabling rapid start up under all line input voltage conditions. The IRS2982 uses voltage mode control operating in critical conduction (CrCM) with a minimum off time limit so that it enters discontinuous (DCM) mode at light loads. Burst mode operation is also available at very light loads.
The IRS2982 is ideal for single stage converters with an unsmoothed DC bus to obtain high power factor and low line current THD.

Typical Connection Diagrams

1. Non-isolated Flyback LED driver – *CURRENT REGULATED*

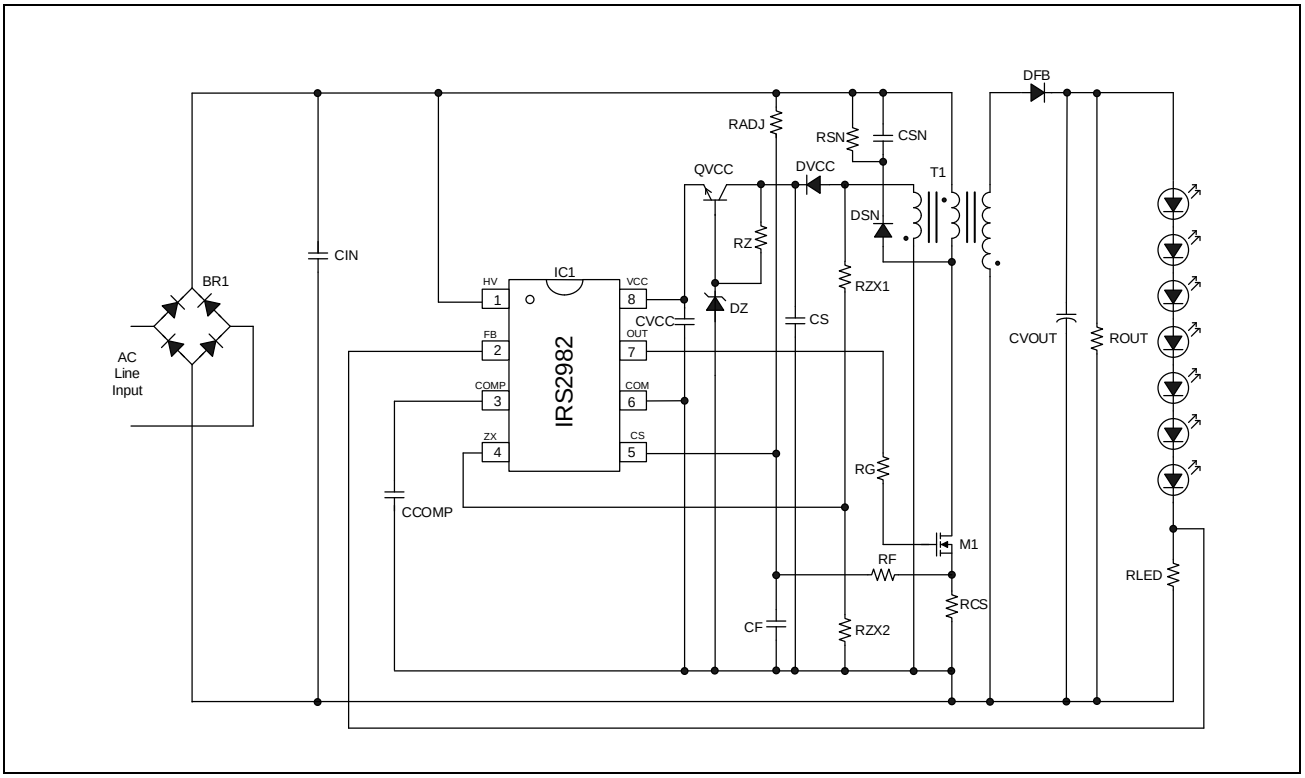

2. Isolated Flyback SMPS – *VOLTAGE REGULATED*

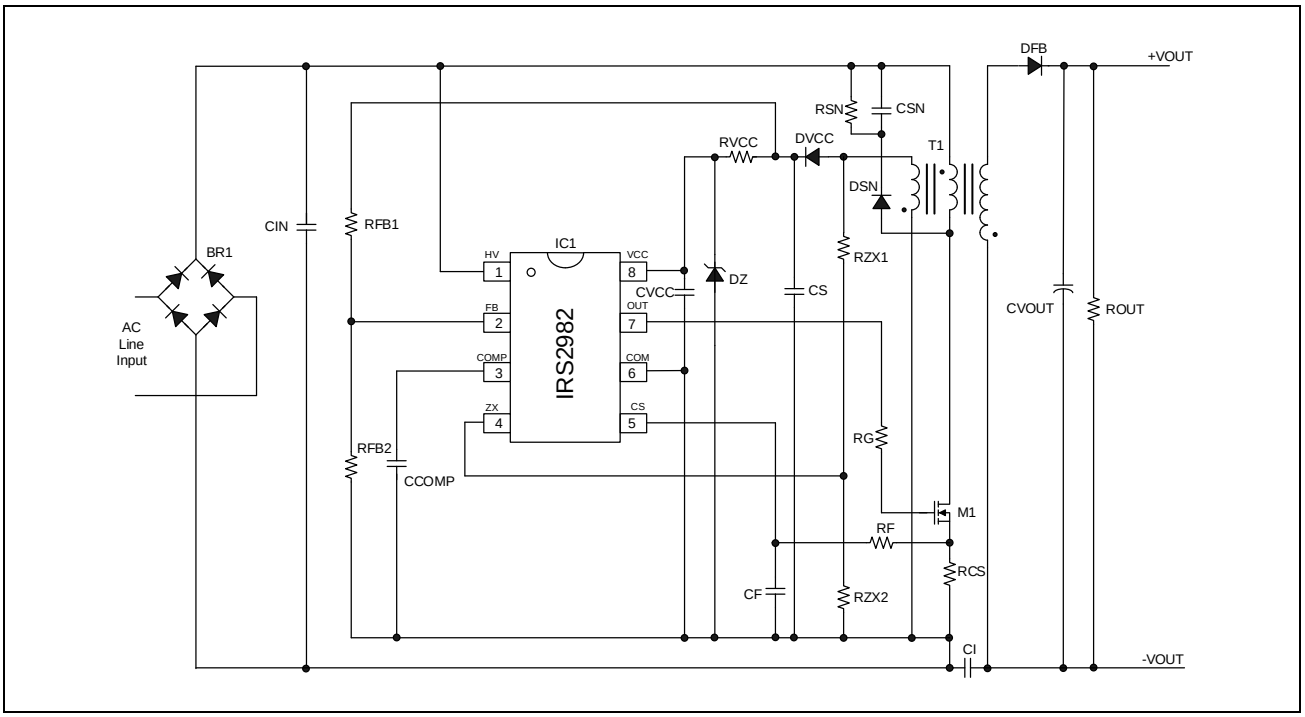

3. Non-Isolated Flyback SMPS – *VOLTAGE REGULATED*

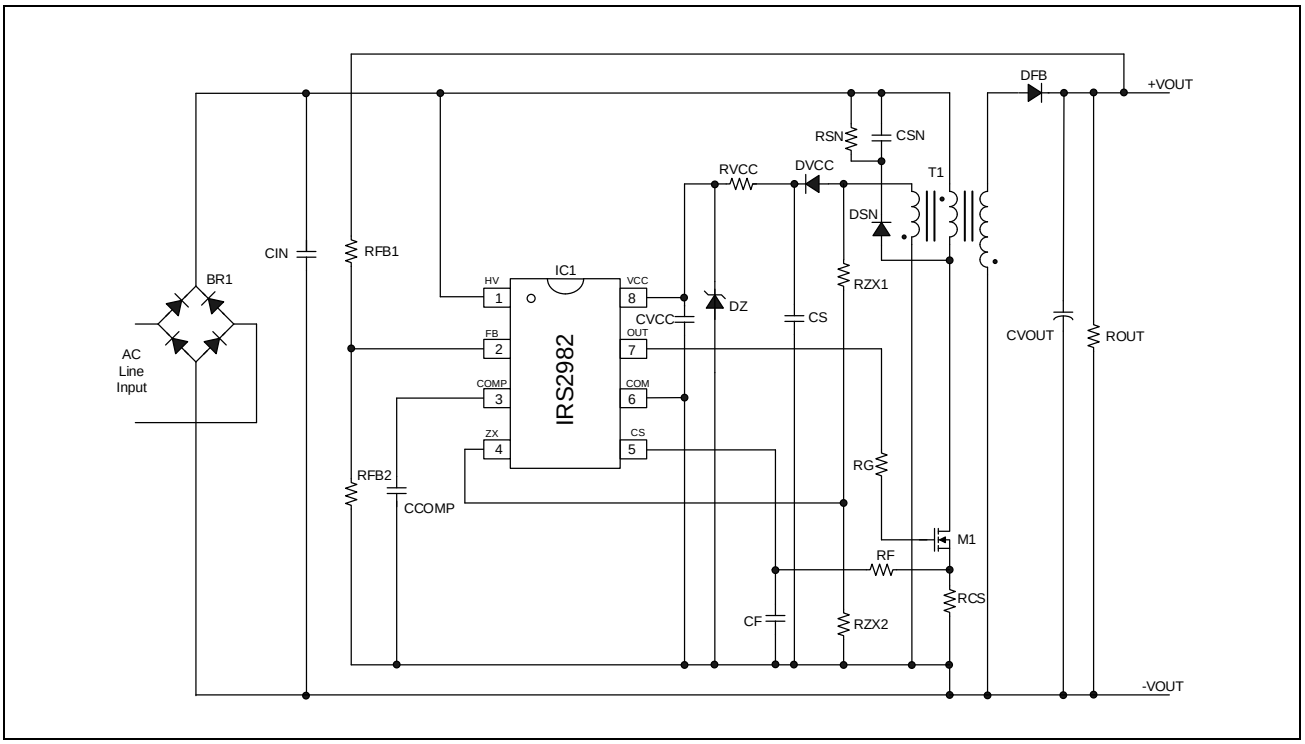

Qualification Information†

Qualification Level		Industrial††	
		Comments: This family of ICs has passed JEDEC's Industrial qualification. IR's Consumer qualification level is granted by extension of the higher Industrial level.	
Moisture Sensitivity Level		SOIC8	MSL2††† 260°C (per IPC/JEDEC J-STD-020)
ESD	Machine Model	Class B (per JEDEC standard JESD22-A115)	
	Human Body Model	Class 1C (per EIA/JEDEC standard EIA/JESD22-A114)	
IC Latch-Up Test		Class I, Level A (per JESD78)	
RoHS Compliant		Yes	

† Qualification standards can be found at Infineon's web site http://www.infineon.com/cms/en/product/technology/quality/

†† Higher qualification ratings may be available should the user have such requirements. Please contact your International Rectifier sales representative for further information.

††† Higher MSL ratings may be available for the specific package types listed here. Please contact your International Rectifier sales representative for further information.

Absolute Maximum Ratings

Absolute maximum ratings indicate sustained limits beyond which damage to the device may occur. All voltage parameters are absolute voltages referenced to COM, all currents are defined positive into any lead. The thermal resistance and power dissipation ratings are measured under board mounted and still air conditions.

Symbol	Definition		Min.	Max.	Units
V_{CC}	IC Low Voltage Supply†		---	20.8	V
V_{OUT}	Gate Driver Output Voltage		-0.3	V_{CC} + 0.3	
IO_{MAX}	Maximum allowable output current (OUT) due to external power transistor Miller effect		-800	600	mA
I_{CC}	V_{CC} current		0	25	mA
V_{HV}	HV Pin Voltage		-0.3	600	V
V_{COMP}	COMP Pin Voltage		-0.3	V_{CC} + 0.3	
V_{FB}	FB Pin Voltage				
V_{ZX}	ZX Pin Voltage				
I_{COMP}	COMP Pin Current		-5	5	mA
I_{ZX}	ZX Pin Current				
I_{CS}	CS Pin Current				
P_D	Package Power Dissipation @ $T_A \leq +25^oC$ $P_D = (T_{JMAX}-T_A)/R_{\theta JA}$	(8-Pin SOIC)	---	0.625	W
$R_{\theta JA}$	Thermal Resistance, Junction to Ambient	(8-Pin SOIC)	---	200	ºC/W
T_J	Junction Temperature		-55	150	ºC
T_S	Storage Temperature		-55	150	
T_L	Lead Temperature (soldering, 10 seconds)		---	300	

† This IC contains a zener clamp structure between the chip V_{CC} and COM which has a nominal breakdown voltage of 20V. This supply pin should not be driven by a DC, low impedance power source greater than the V_{CLAMP} specified in the Electrical Characteristics section.

Recommended Operating Conditions

For proper operation the device should be used within recommended conditions.

Symbol	Definition	Min.	Max.	Units
V_{CC}	Supply Voltage	V_{CCUV+}	18	V
I_{CC}	V_{CC} Supply Current	0	10	mA
I_{CS}	CS Pin Current	-1	1	
I_{ZX}	ZX Pin Current			
V_{FB}	FB Pin Voltage	0	6.0	V
V_{CS}	CS Pin Voltage	0.1	1.3	
T_J	Junction Temperature	-25	125	ºC

Electrical Characteristics

V_{CC} =14V +/- 0.25V, C_{OUT} = 1000pF,
V_{COMP} = V_{OC} = V_{FB} = V_{ZX} = 0V, T_A=25˚C unless otherwise specified

Symbol	Definition	Min	Typ	Max	Units	Test Conditions
Supply Characteristics						
V_{CCUV+}	V_{CC} Supply Under-voltage Positive Going Threshold	11.5	12.5	13.5	V	
V_{CCUV-}	V_{CC} Supply Under-voltage Negative Going Threshold	9.5	10.5	11.5		
V_{UVHYS}	V_{CC} Supply Under-voltage Lockout Hysteresis	1.5	2.0	3.0		
I_{QCCUV}	UVLO Mode V_{CC} Quiescent Current	---	50	200	µA	V_{CC}=6V
I_{QCC}	V_{CC} Supply Quiescent Current	1.00	1.45	2.30	mA	
V_{CLAMP}	V_{CC} Zener Clamp Voltage	19.8	20.8	21.8	V	I_{CC}=10mA
High Voltage Startup Characteristics						
V_{HVSMIN}	Minimum Startup Voltage	30.0	---	---		
I_{HV_CHARGE}	V_{CC} Charge Current	3.20	3.77	4.30	mA	V_{CC}=0V V_{HVS}=50V
V_{HVS_OFF1}	Cut off level in Startup mode	17.4	18	18.6	V	I_{HV}=100µA GBD
V_{HVS_OFF2}	Cut off level in Support mode	12.5	13	13.5		
I_{HVS_OFF}	High Voltage Start-up Circuit OFF State Leakage Current	---	---	50	µA	HV=400V V_{CC}>$V_{HVSOFF(MAX)}$
Error Amplifier Characteristics						
I_{VFB}	Input Bias Current	---	-1	---	µA	V_{FB}=0 to 3V
I_{COMP_SOURCE}	COMP Pin Error Amplifier Output Current Sourcing	20	33	60		
I_{COMP_SINK}	COMP Pin Error Amplifier Output Current Sinking	-60	-33	-20		
V_{COMPOH}	Error Amplifier Output Voltage Swing (high state)	---	13.5	---	V	
$V_{COMPOFF}$	Cut off voltage below which gate drive output is disabled	1.12	1.40	1.68		V_{FB}=1.0V
$V_{COMPOFF_HYS}$	Cut off voltage hysteresis	---	40	---	mV	
g_m	Trans-conductance	---	100	---	µA/V	
Control Characteristics						
V_{ZX+}	ZX Pin Threshold Voltage (Arm)	1.40	1.54	1.68	V	
V_{ZX-}	ZX Pin Threshold Voltage (Trigger)	0.48	0.58	0.66		
V_{REF}	Regulation Reference	0.392	0.400	0.408		
t_{BLANK}	OC pin current-sensing blank time	160	200	264	ns	V_{FB}=1.0V V_{COMP}=4.0V V_{CS}=1.5V

Electrical Characteristics (cont'd)

V_{CC} =14V +/- 0.25V, C_{OUT} = 1000pF,
V_{COMP} = V_{OC} = V_{FB} = V_{ZX} = 0V, T_A=25˚C unless otherwise specified.

Symbol	Definition	Min	Typ	Max	Units	Test Conditions
t_{WD}	Gate Drive Restart Pulse Interval	60	100	130	µs	V_{ZX}=0 V_{COMP}=4.0V
t_{ONMIN}	PWM Minimum ON time	143	168	194	ns	
t_{ONMAX}	PWM Maximum ON Time	18	30	45	µs	V_{ZX}=0 V_{COMP}=13V
t_{OFFMIN}	PWM Minimum OFF Time	2.60	3.12	3.60	µs	
f_{MAX}	Maximum Switching Frequency	---	320	---	kHz	t_{ONMIN} and t_{OFFMIN}
Protection Circuitry Characteristics						
V_{CSTH}	CS Pin Over-current Sense Threshold	1.14	1.20	1.26	V	
t_{CS}	Over-current protection delay	---	110	200	ns	GBD
V_{OVTH}	ZX Pin Over-voltage Comparator Threshold	4.85	5.10	5.35	V	
t_{OVTH}	ZX Pin Over-voltage Comparator Blanking Time	---	100	---	ns	GBD
Gate Driver Output Characteristics (OUT pin)						
V_{OL}	Low-Level Output Voltage	---	0	100	mV	I_O=0
V_{OH}	High-Level Output Voltage	---	0	100		V_{CC}–V_O, I_O=0
t_r	Turn-On Rise Time	---	60	110	ns	
t_f	Turn-Off Fall Time	---	30	70		
I0+	Source Current	---	200	---	mA	
I0-	Sink Current	---	400	---		

GBD Guaranteed by design

Functional Block Diagram

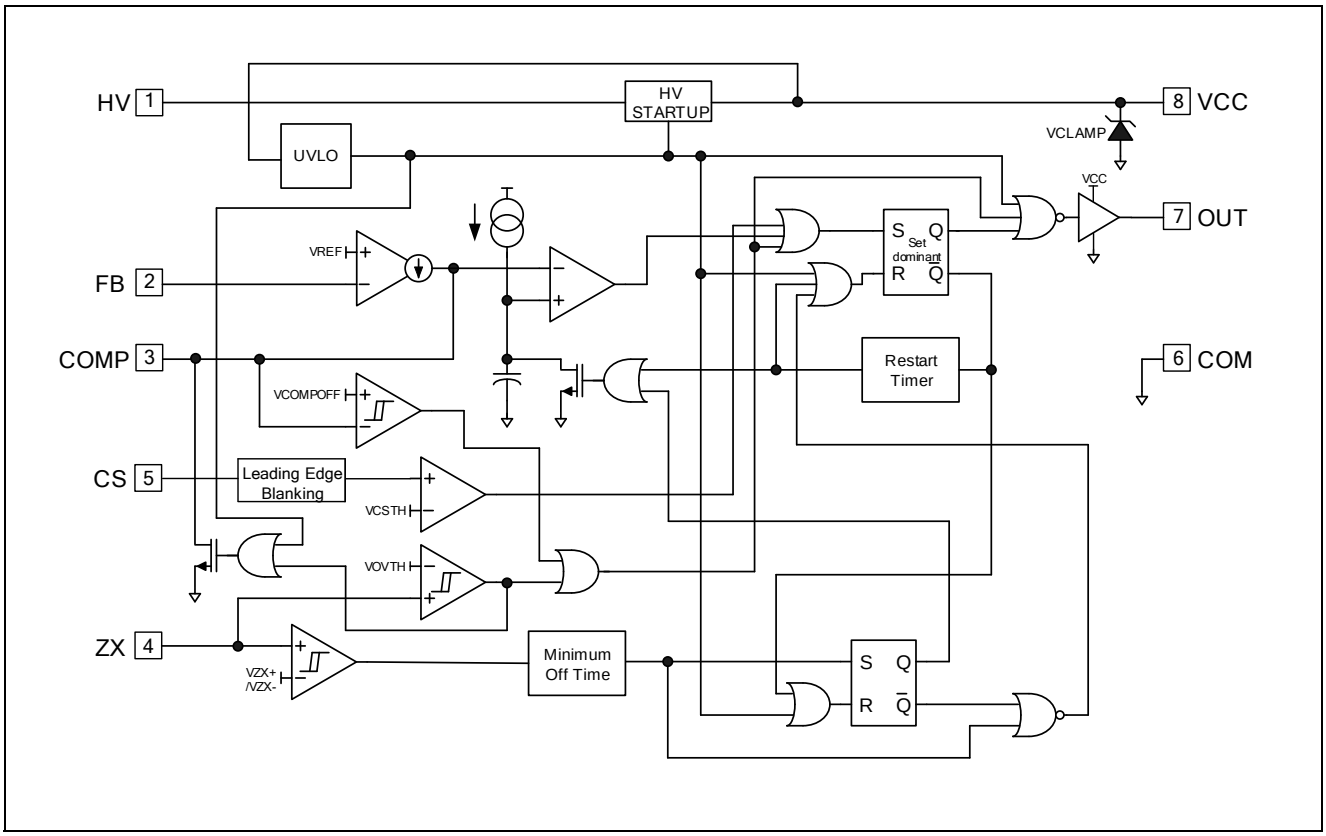

State Diagram

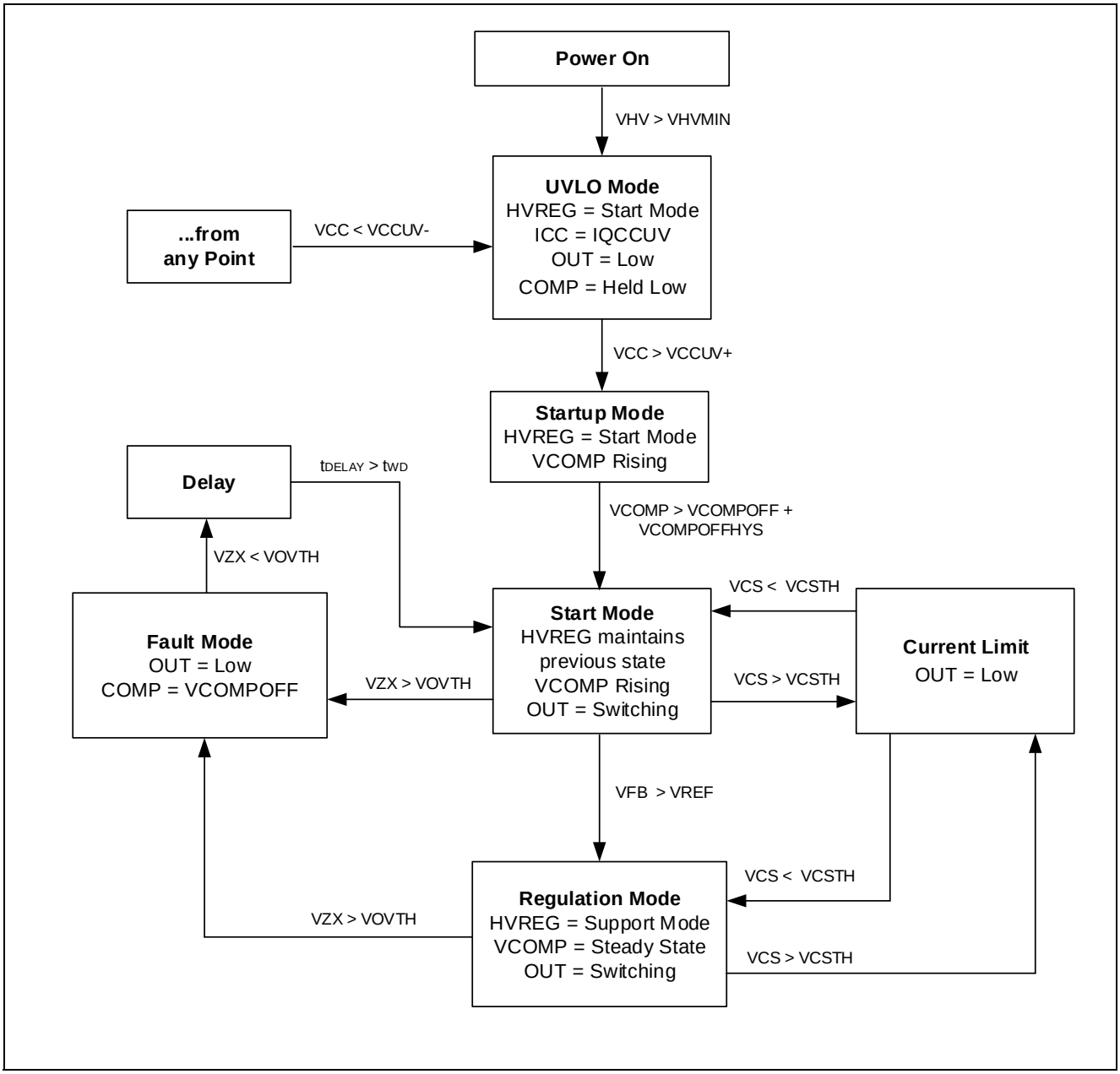

Input / Output Pin Equivalent Circuit Diagrams

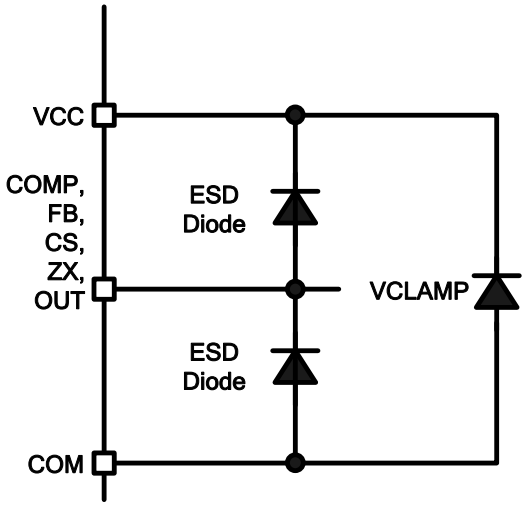

Lead Definitions

Symbol	Description
HV	High Voltage Startup Input
FB	Feedback Input
COMP	Compensation and averaging capacitor input
ZX	Zero-Crossing & Over-Voltage Detection input
CS	Current Sensing Input
COM	IC Power & Signal Ground
OUT	Gate Driver Output
VCC	Logic & Low-Side Gate Driver Supply

Lead Assignments

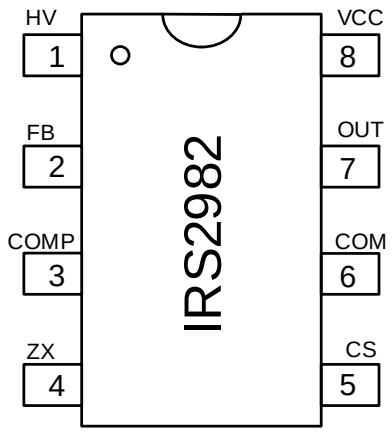

Application Information and Additional Details

The IRS2982 is a switched mode controller IC designed primarily for use in Buck, Boost and Flyback LED drivers and power supplies where power factor correction is required.

Internal high voltage regulator

The internal high voltage regulator supplies the IC low voltage bias supply VCC during startup, allowing operation directly from a DC input voltage up to 600V. To begin operating the IRS2982 requires VCC to be raised above the under voltage lockout positive threshold (V_{CCUV+}) and to continue operating VCC must be maintained above the under voltage lockout negative threshold (V_{CCUV-}).
The HV regulator enables an IRS2982 based LED driver to start up very rapidly and deliver light within 0.5s of switch on at any line input voltage. When the switching converter is operating VCC is normally supplied through an auxiliary transformer winding. The HV regulator switches over to support mode when steady state operation is reached in which VCC is held above V_{CCUV+} to maintain operation under light load or fault conditions.
As well as supplying VCC the Flyback inductor/transformer auxiliary winding provides output voltage and zero-crossing (ZX) information for critical conduction mode (CrCM) operation.
In the event of a short circuit at the output, the VCC supply derived from the auxiliary winding normally collapses below V_{CCUV-} causing the IRS2982 to shut off. The startup sequence then begins again in a continuous “hiccup” mode until the short circuit is removed thereby preventing damage to the circuit.

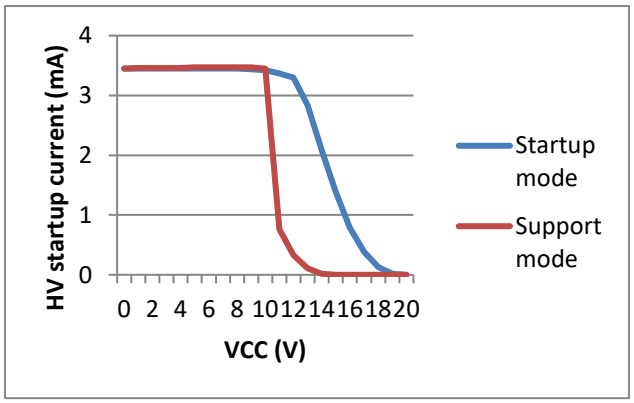

Figure 1: HV regulator characteristics

Figure 1 illustrates the characteristics of the high voltage regulator. At switch on it operates in *startup mode* during which current is supplied to VCC from the HV input connected to the rectified high voltage bus. The current supplied depends on the voltage at VCC and gradually falls as VCC rises until it cuts off completely at V_{HVS_OFF1}. During normal operation when the voltage at the FB input exceeds VREF for the first time the HV regulator switches over to *support mode,* where current is suppled to VCC only when the voltage drops below V_{HVS_OFF2}, which is close to V_{CCUV+}. This helps to sustain the VCC supply at light loads such as during dimming. Once in support mode the IRS2982 will not revert to start-up mode until VCC drops below V_{CCUV-}.
Sustained operation of the HV regulator may is likely to cause heating and should be avoided.
Further information is given in the performance graphs section.

Voltage/current regulation

The IRS2982 may be operated using either a voltage or current feedback loop. Examples of each are shown above in the typical application diagrams. The feedback voltage is fed to the FB input of the IC, which is connected to the internal trans-conductance error amplifier inverting input. The non-inverting input is connected to an internal temperature compensated band-gap voltage reference (V_{REF}) and the output is connected to the compensation (COMP) output.
The FB input can be derived from a shunt resistor returning LED load current to the 0V return in a non-isolated Flyback LED driver to regulate output current. Alternatively it can be fed by a divider from the transformer auxiliary winding to provide voltage regulation in an isolated power supply or a divider directly from the output in a non-isolated power supply. Sensing from the auxiliary winding may require some additional filtering components and does not provide highly accurate regulation of the output voltage.
The compensation (COMP) voltage determines the switching cycle on time for voltage mode control. Loop compensation is performed by means of the trans-conductance error amplifier using an external capacitor (CCOMP) connected to 0V to realize an integrator to provide a stable error voltage used to control the converter on time. CCOMP is typically 1µF in high power factor single stage converters. PF > 0.9 and iTHD < 20% is possible over a wide line/load range.
At light loads if V_{COMP} drops below $V_{COMPOFF}$ the IRS2982 operates in burst mode.

Burst mode operation

Under light load conditions the COMP capacitor is discharged by the error amplifier reducing V_{COMP}. Minimum on time is reached just before V_{COMP} falls below $V_{COMPOFF}$. If the output needs to be reduced further then V_{COMP} is driven below $V_{COMPOFF}$ and the gate drive is disabled. However the HV start-up cell does not switch from support to start-up mode in this case.
Gate drive does not start up again until V_{COMP} has risen above this value by $V_{COMPOFF_HYS}$ at which time it will start to switch at minimum on time. During burst mode operation the on time typically remains at minimum t_{ONMIN} and the off time is limited to the minimum off time t_{OFFMIN}. Switching frequency under these conditions is around 320kHz, which is the maximum possible for the IRS2982. The length of each burst and the period between bursts are determined by the value of CCOMP in conjunction with the converter output capacitor value.
The VCC supply is normally maintained through the auxiliary winding, however if necessary the high voltage regulator will supply current to VCC to keep it just above V_{CCUV-}.

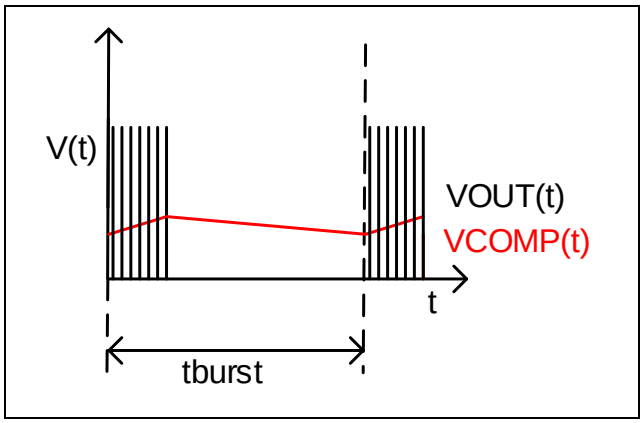

Figure 2: Burst mode waveforms

Primary current limiting

Primary MOSFET current is sensed through a shunt resistor (RCS) connected from the source of the Flyback MOSFET switch to the DC bus return. This current waveform is a high frequency ramp rising from zero at the beginning of each switching cycle to reach a peak level at the point the MOSFET is switched off and remaining at zero during the off time.
At very low input voltages the voltage or current regulation loop would demand a very high peak current, which may exceed the maximum rating of the transformer. To prevent saturation from occurring, the IRS2982 provides cycle by cycle primary current limiting with a threshold V_{CSTH} at the CS pin input.
Under low line or fault conditions where the MOSFET current is abnormally high the gate drive is switched off after the blanking time t_{BLANK}. Leading edge blanking is necessary to avoid false triggering due to the fast high current switch on transient that occurs at switch on of the MOSFET resulting from discharge of parasitic capacitances.

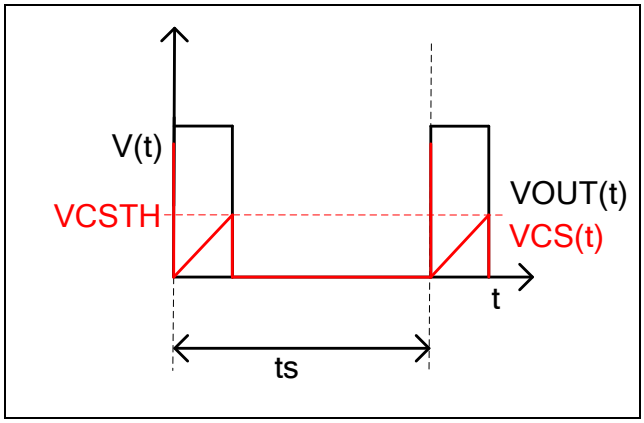

Figure 3: Cycle by cycle current limiting

The IRS2982 normally operates in critical conduction mode (CrCM), also known as transition or boundary mode. The transformer auxiliary winding provides a signal to the IRS2982 ZX input that indicates when all of the energy stored in the inductor has been transferred to the output. This triggers the start of the next switching cycle. The auxiliary winding voltage is divided through RZX1 and RZX2 to provide the ZX pin input signal. The pulse amplitude ZX is approximately proportional to the secondary output voltage and therefore the DC output voltage:

$$VZX \approx \frac{N_A \cdot RZX2 \cdot VOUT}{N_S \cdot (RZX1 + RZX2)} \qquad [1]$$

Where,

N_A = Number of turns on the auxiliary winding
N_S = Number of turns on the secondary winding
VOUT = DC Output Voltage or LED voltage

In reality V_{ZX} contains high frequency ringing resulting from leakage inductance and other circuit

parasitics. This ringing may need to be filtered to provide acceptable output voltage tracking.
When the converter MOSFET switches off, V_{ZX} transitions positively. The values of RZX1 and RZX2 must be selected so that this voltage always exceeds the V_{ZX+} threshold to ensure CrCM operation. If the IRS2982 is used in a converter required to drive loads over a range of voltage such as a constant current regulated LED driver, V_{ZX} needs to exceed V_{ZX+} at the *minimum* load voltage. If V_{ZX} does not exceed V_{ZX+} the IRS2982 will not operate in CrCM and remains pulsing with the t_{WD} timeout periodically triggering the next cycle. In normal CrCM when V_{ZX} exceeds V_{ZX+} the IRS2982 waits until the V_{ZX} then drops below V_{ZX-} again to initiate the next switching cycle. A capacitor may be added in parallel with RZX2 to add a small delay. This may be needed to minimize switching loss by delaying switch on until the minimum point or "valley" of the drain voltage.
The IRS2982 includes a minimum off time function so that if the ZX pin input transitions high and low in less than t_{OFFMIN}, the gate drive output will not transition high again until the end of this period. This prevents false tripping by ringing at the ZX input and also limits the converter maximum switching frequency by entering DCM under conditions where the off time would otherwise be unacceptably short. The minimum off time extends the operating range of the converter allowing operation down to very low duty cycles. This enables dimming designs to be implemented as well as limiting operating frequency to limit switching losses and prevent overheating of the circuit magnetics, the MOSFET and snubber components.

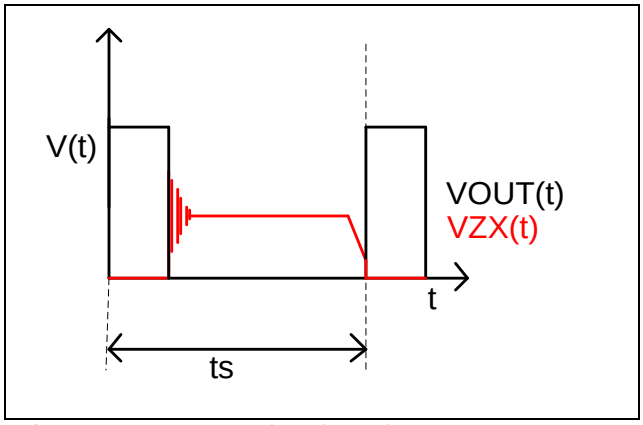

Figure 4: Zero crossing detection

The IRS2982 may also be used in DCM by driving the ZX input from a delay circuit triggered by the falling edge of the gate drive output. A simple circuit is added as shown in figure 5. As the gate drive goes low a pulse of determined length can be generated to drive ZX forcing the system to operate with a fixed off time greater than the preset minimum off time.

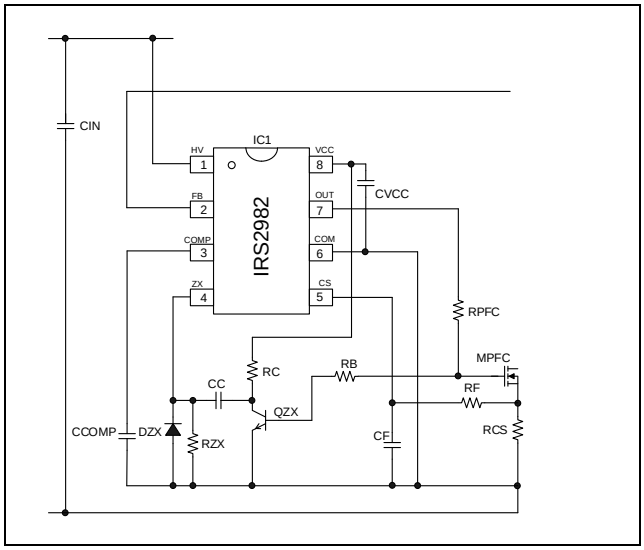

Figure 5: DCM Operation

Over voltage protection

The ZX input is a multi-function input also used for output over voltage limiting. In a Flyback converter if the load becomes disconnected the output voltage can become very high causing rapid damage to components as well as presenting a possible electrical hazard. In order to protect against this the IRS2982 senses the output voltage indirectly through the ZX input, since its peak voltage tracks the output voltage. If the ZX input voltage exceeds V_{OVTH} the gate drive switches off for a t_{WD} period before starting the next cycle. At the same time the COMP capacitor is discharged below $V_{COMPOFF}$ so after a delay the next cycle will begin at minimum duty cycle and ramp up slowly. This protection scheme allows the load to be "hot" connected and disconnected from the converter output without risk of damaging the circuit by high voltages appearing at the output. Care should be taken however to avoid damage to LED loads due to output capacitor discharge. An NTC thermistor at the output may be needed to limit the current surge. The overvoltage threshold is set by choosing the values of RZX1 and RZX2 appropriately, according to the formula:

$$VOUT_{OV} \approx \frac{VOVTH \cdot N_S \cdot (RZX1 + RZX2)}{N_A \cdot RZX2} \quad [2]$$

The recommended over voltage threshold is 25% above the normal operating voltage for LED loads.

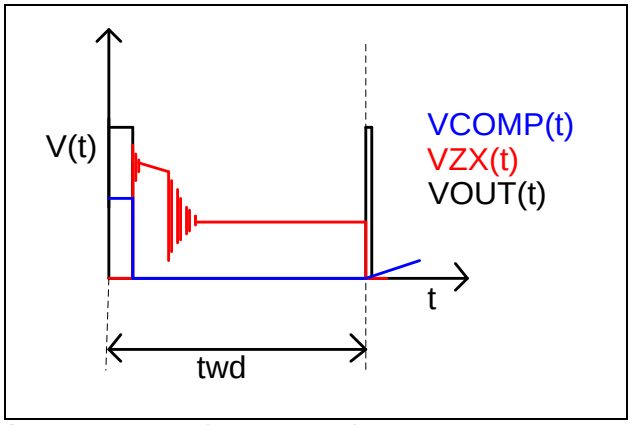

Figure 6: Overvoltage protection

Operating with a secondary feedback circuit

In applications where galvanic isolation and accurate voltage and/or current regulation are required, the IRS2982 should be used in conjunction with a secondary sensing and feedback circuit. The feedback circuit is fed through an opto-isolator connected to the IRS2982 as follows:
A simple feedback scheme is shown in figure 7 to illustrate how an opto-isolator may be connected to the IRS2982 to create a feedback circuit. The FB input is tied to COM leaving the error amplifier inverting input at zero volts so that the COMP output provides pull up. The opto-isolator feedback pulls down on the COMP voltage to reduce the on time as the opto-diode current is increased driven by a secondary error amplifier circuit typically based around the TL431 IC. A pull-up resistor from COMP to VCC and a capacitor from COMP to 0V are recommended for optimum stability.
The IRS2982 remains in start mode since the FB input is connected to 0V and can therefore never rise above the V_{REG} threshold to enter regulation mode. Operation in start mode is possible, however VCC should be set to 17V or higher to ensure that only micro current is drawn from the high voltage regulator during steady state operation. This is easily done by using a series pass transistor (QVCC) with the base biased with an 18V zener diode (DZX) to supply VCC. Care should be taken to avoid auxiliary winding voltages above 25V to prevent overheating of QVCC.

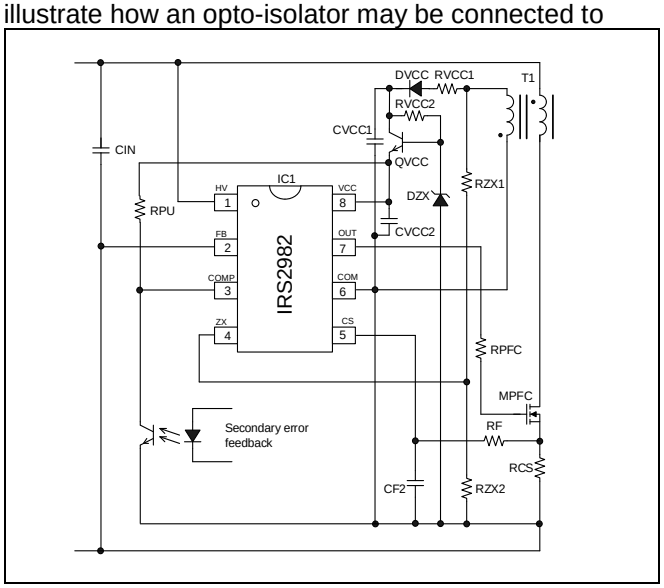

Figure 7: Secondary feedback circuit opto-isolator connection

Performance Graphs

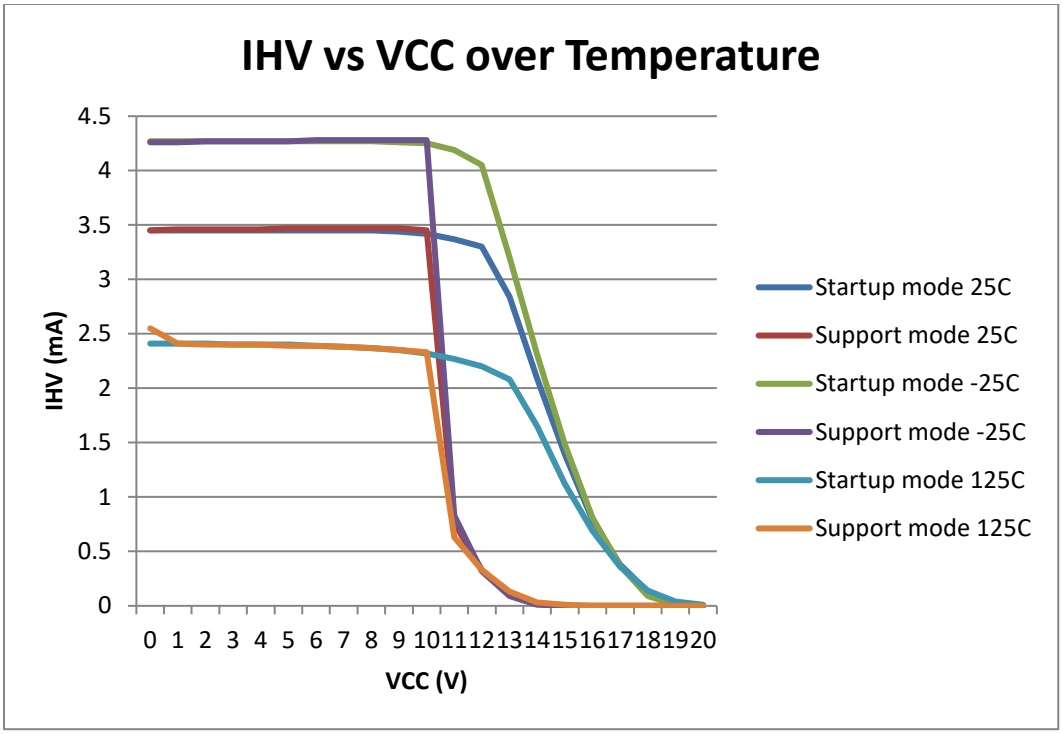

Figure 7: High voltage start up characteristics, IHV vs VCC

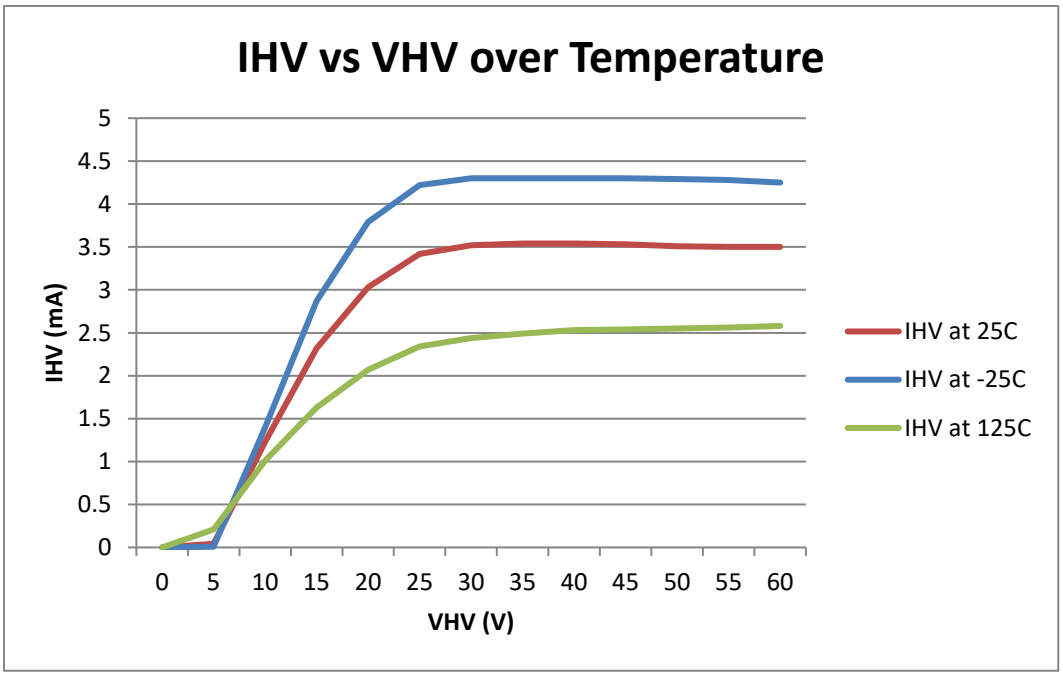

Figure 8: High voltage start up characteristics, IHV vs VHV

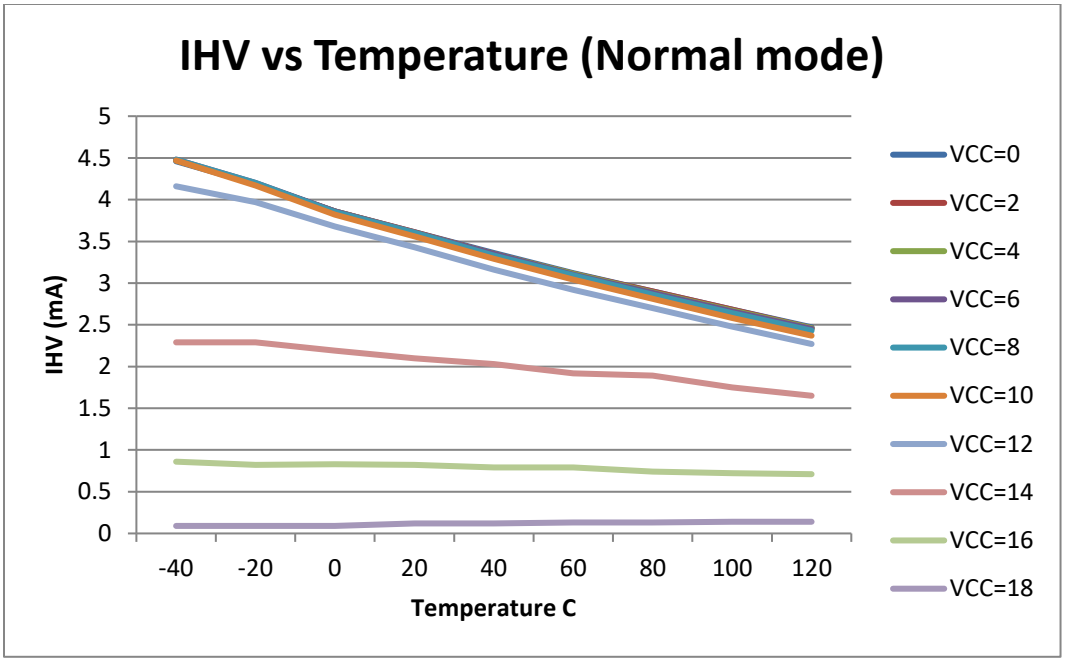

Figure 9: High voltage start up characteristics, IHV over temperature in Normal mode

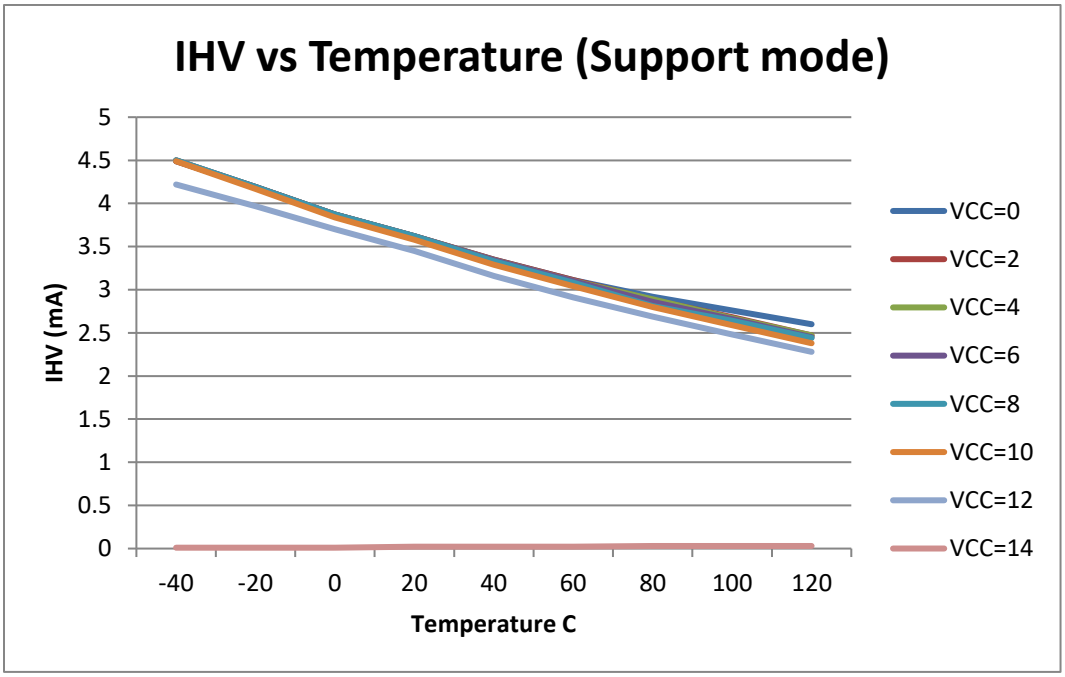

Figure 10: High voltage start up characteristics, IHV over temperature in Support mode

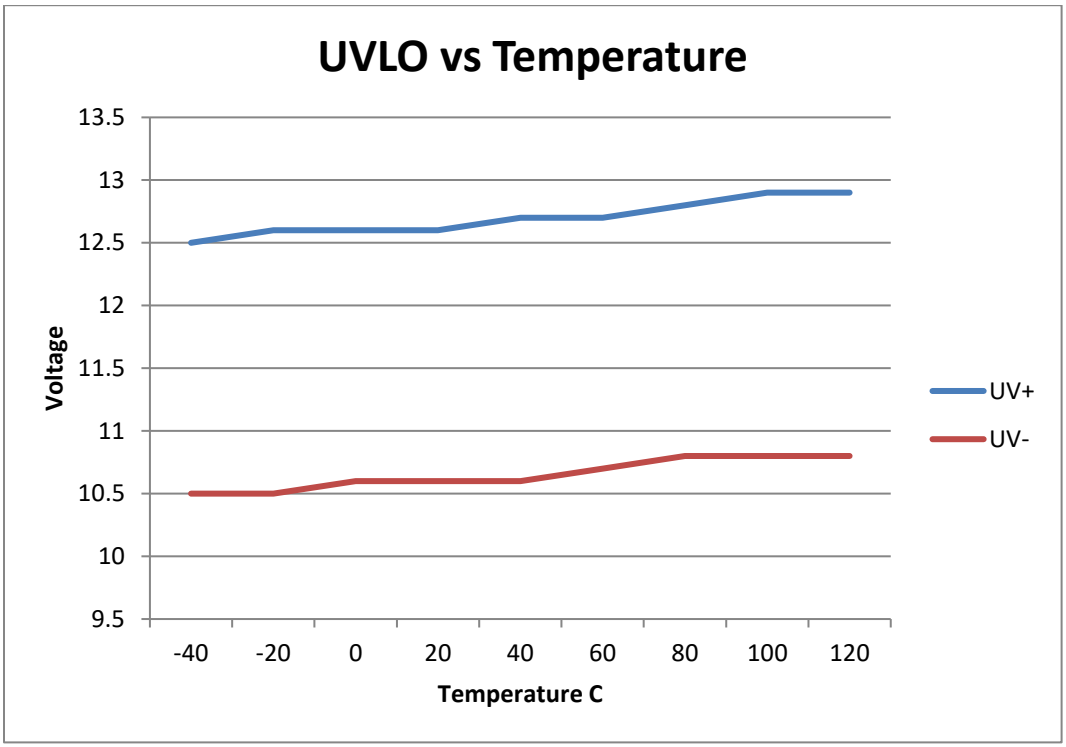

Figure 11: Under voltage lockout thresholds (VCCUV+ and VCCUV-) over temperature

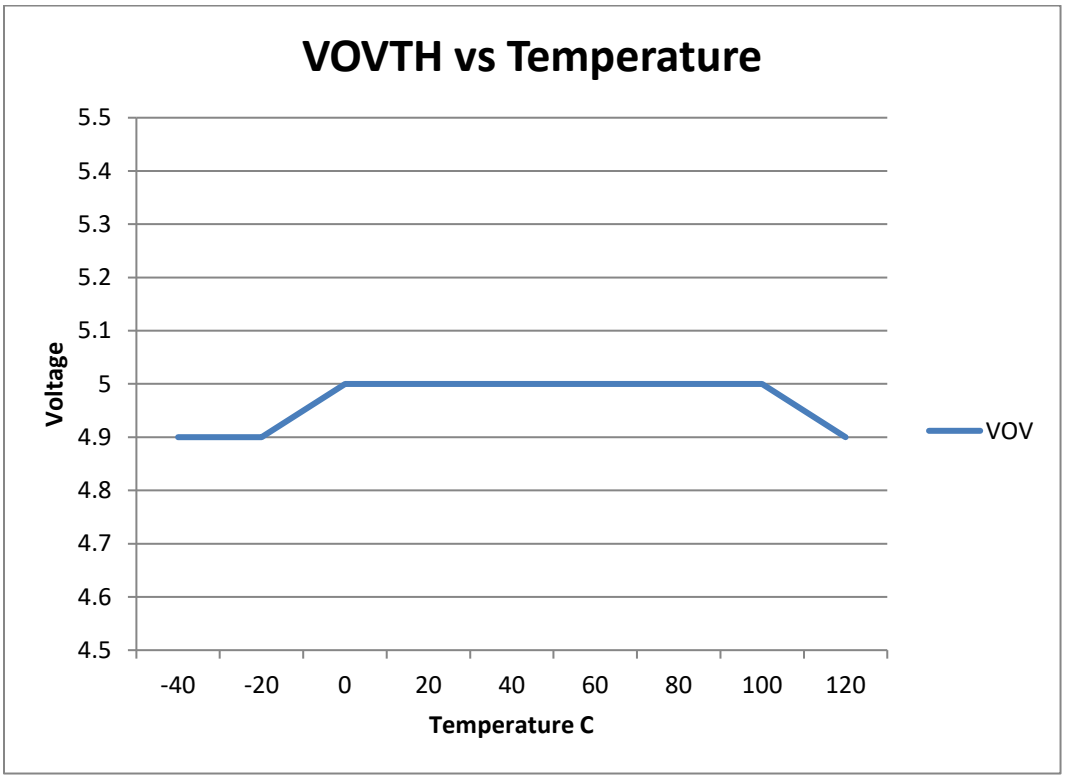

Figure 12: Over voltage threshold (VOVTH) over temperature

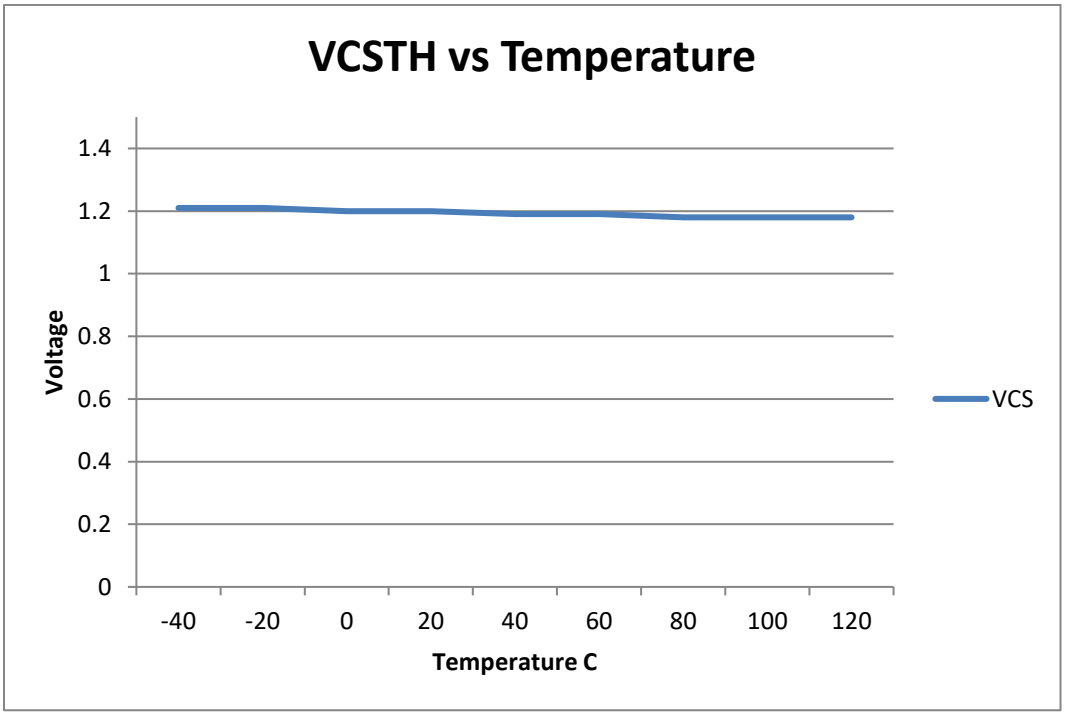

Figure 13: Over current threshold (VCSTH) over temperature

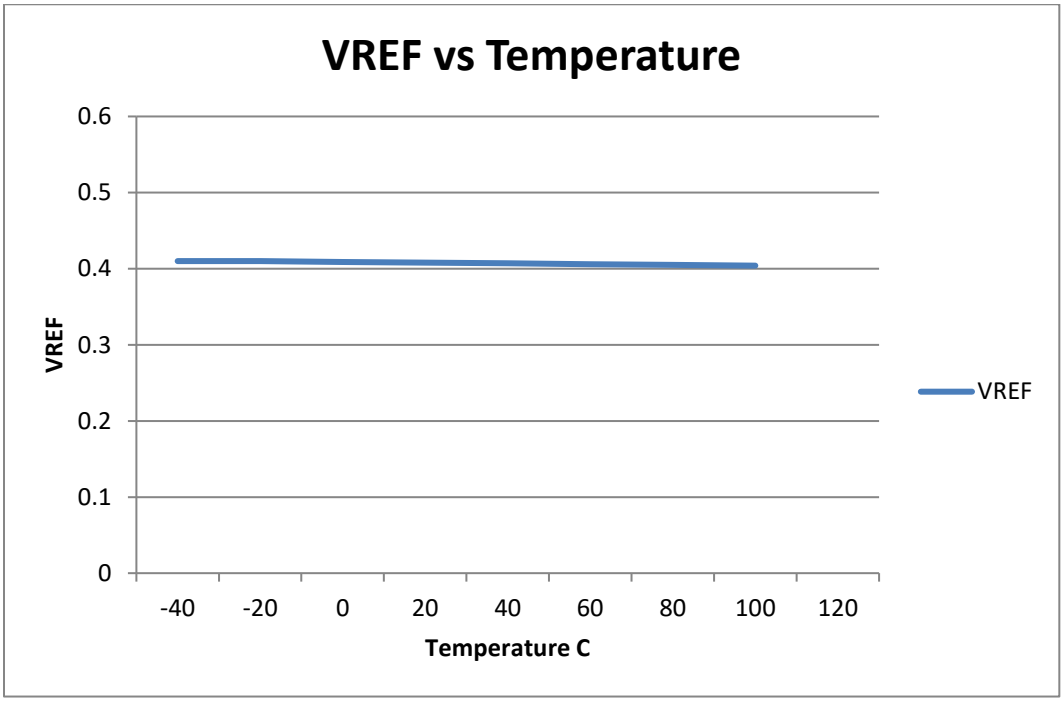

Figure 14: Feedback voltage reference (VFB) over temperature

Note
This measurement is performed by connecting FB and COMP together and measuring the voltage at this point, which is not a direct measurement of the reference voltage.

Package Details

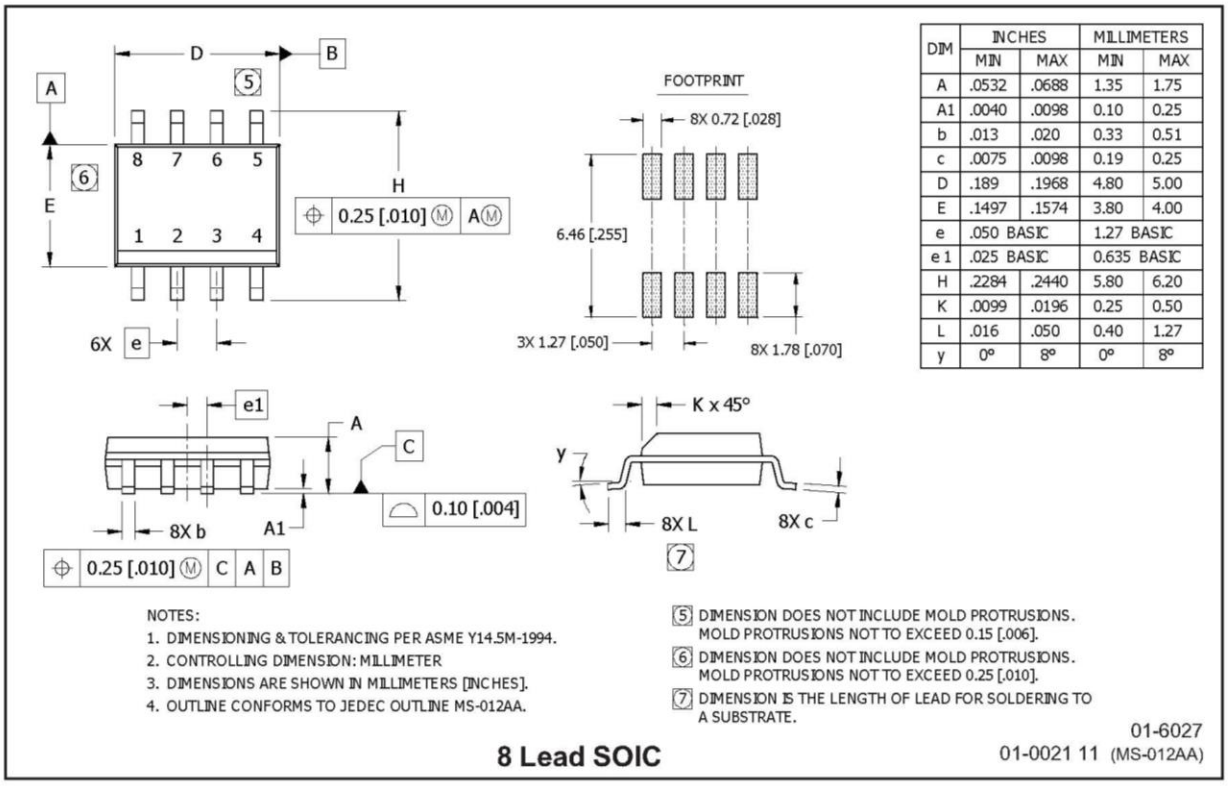

DIM	INCHES		MILLIMETERS	
	MIN	MAX	MIN	MAX
A	.0532	.0688	1.35	1.75
A1	.0040	.0098	0.10	0.25
b	.013	.020	0.33	0.51
c	.0075	.0098	0.19	0.25
D	.189	.1968	4.80	5.00
E	.1497	.1574	3.80	4.00
e	.050 BASIC		1.27 BASIC	
e 1	.025 BASIC		0.635 BASIC	
H	.2284	.2440	5.80	6.20
K	.0099	.0196	0.25	0.50
L	.016	.050	0.40	1.27
y	0°	8°	0°	8°

Tape and Reel Details

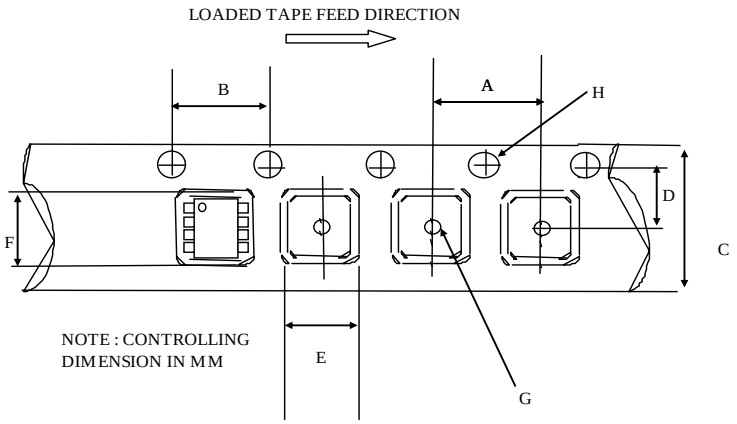

CARRIER TAPE DIMENSION FOR 8SOICN

Code	Metric		Imperial	
	Min	Max	Min	Max
A	7.90	8.10	0.311	0.318
B	3.90	4.10	0.153	0.161
C	11.70	12.30	0.46	0.484
D	5.45	5.55	0.214	0.218
E	6.30	6.50	0.248	0.255
F	5.10	5.30	0.200	0.208
G	1.50	n/a	0.059	n/a
H	1.50	1.60	0.059	0.062

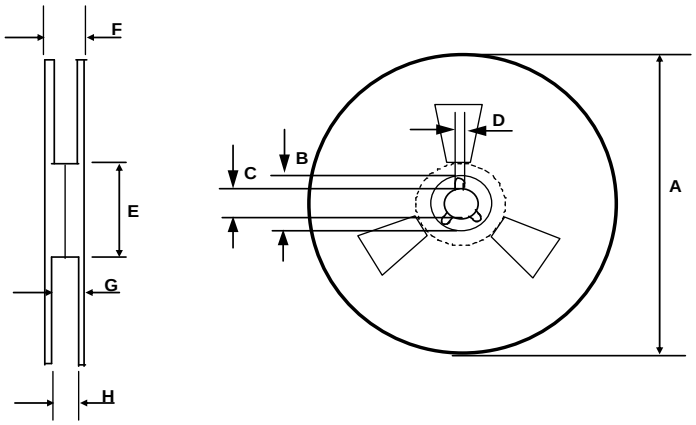

REEL DIMENSIONS FOR 8SOICN

Code	Metric		Imperial	
	Min	Max	Min	Max
A	329.60	330.25	12.976	13.001
B	20.95	21.45	0.824	0.844
C	12.80	13.20	0.503	0.519
D	1.95	2.45	0.767	0.096
E	98.00	102.00	3.858	4.015
F	n/a	18.40	n/a	0.724
G	14.50	17.10	0.570	0.673
H	12.40	14.40	0.488	0.566

Part Marking Information

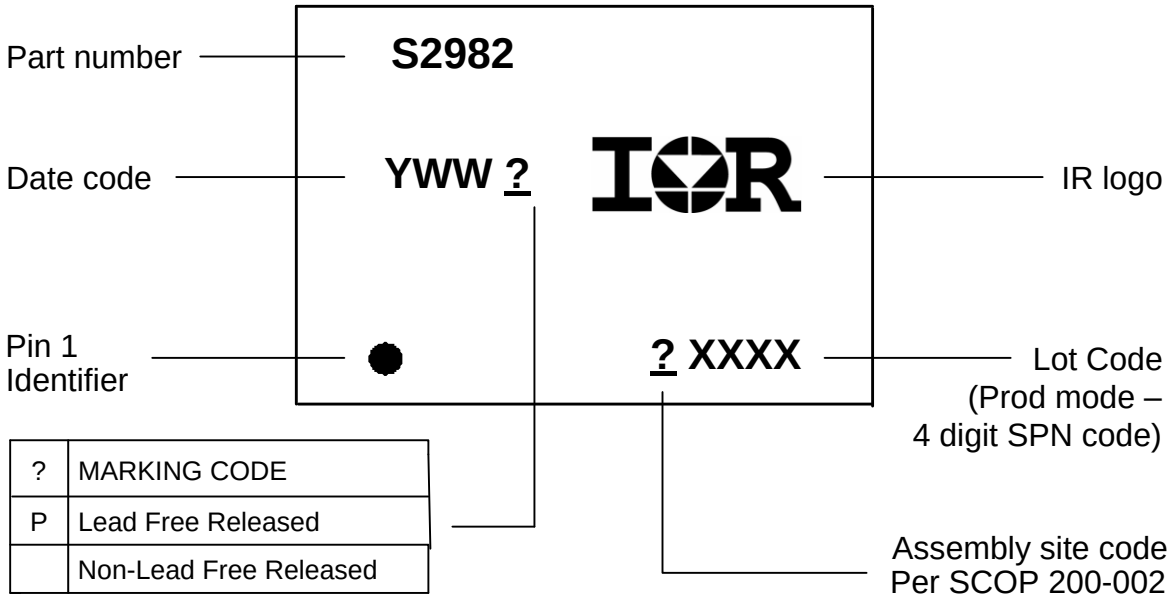

?	MARKING CODE
P	Lead Free Released
	Non-Lead Free Released

Published by
Infineon Technologies AG
81726 München, Germany
© Infineon Technologies AG 2015
All Rights Reserved.

IMPORTANT NOTICE

The information given in this document shall in no event be regarded as a guarantee of conditions or characteristics ("Beschaffenheitsgarantie"). With respect to any examples, hints or any typical values stated herein and/or any information regarding the application of the product, Infineon Technologies hereby disclaims any and all warranties and liabilities of any kind, including without limitation warranties of non-infringement of intellectual property rights of any third party.

In addition, any information given in this document is subject to customer's compliance with its obligations stated in this document and any applicable legal requirements, norms and standards concerning customer's products and any use of the product of Infineon Technologies in customer's applications.

The data contained in this document is exclusively intended for technically trained staff. It is the responsibility of customer's technical departments to evaluate the suitability of the product for the intended application and the completeness of the product information given in this document with respect to such application.

For further information on the product, technology, delivery terms and conditions and prices please contact your nearest Infineon Technologies office (www.infineon.com).

WARNINGS

Due to technical requirements products may contain dangerous substances. For information on the types in question please contact your nearest Infineon Technologies office.

Except as otherwise explicitly approved by Infineon Technologies in a written document signed by authorized representatives of Infineon Technologies, Infineon Technologies' products may not be used in any applications where a failure of the product or any consequences of the use thereof can reasonably be expected to result in personal injury.