The 5 kW, two-channel, interleaved CCM PFC EVAL board

IKW40N65WR5, IDW60C65D1, and 1ED44175 in high frequency PFC applications

About this document

Scope and purpose

This user manual provides an overview of the reference design developed for the EVAL-PFC5KIKWWR5SYS evaluation board, its main features, key data, and mechanical dimensions.

EVAL-PFC5KIKWWR5SYS is a fast-switching, analog-controlled, two-channel, interleaved, 5 kW PFC converter with Infineon's TRENCHSTOP™ 5 WR5 IGBT — IKW40N65WR5. It is designed to show case the use of WR5 IGBT with high switching frequencies (up to 60 kHz) in an interleaved power factor correction (PFC) application that enables many system benefits such as smaller size PFC choke, overall system size, and bill of material (BOM) cost. This document also discusses an effective design example using Infineon's low-side gate driver — 1ED44175 and rapid1 power silicon diode — IDW60C65D1.

This evaluation board has a flexible input AC voltage of 180-264 V and provides a 400 V output voltage with maximum current of 12.5 A. Suggestions on developing interleaved PFC converters in similar power ranges, adapted to specific requirements in major home appliances such as high-power, switched-mode power supply (SMPS) and floor-standing air conditioners are provided in this guide.

Intended audience

This user guide is intended for all technical specialists familiar with high-speed AC/DC power stage design and high-power interleaved PFC converters. The reference designs must be used under laboratory conditions and only by trained specialists.

Evaluation Board

The EVAL-PFC5KIKWWR5SYS board will be used during design-in for evaluation and measurement of characteristics and verification of data sheet specifications.

Note: *PCB and auxiliary circuits are NOT optimized for final customer design.*

Note: *Boards do not necessarily meet safety, EMI, quality standard (for example UL, CE) requirements.*

Important notice

"Evaluation Boards and Reference Boards" shall mean products embedded on a printed circuit board (PCB) for demonstration and/or evaluation purposes, which include, without limitation, demonstration, reference and evaluation boards, kits and design (collectively referred to as "Reference Board").

Environmental conditions have been considered in the design of the Evaluation Boards and Reference Boards provided by Infineon Technologies. The design of the Evaluation Boards and Reference Boards has been tested by Infineon Technologies only as described in this document. The design is not qualified in terms of safety requirements, manufacturing and operation over the entire operating temperature range or lifetime.

The Evaluation Boards and Reference Boards provided by Infineon Technologies are subject to functional testing only under typical load conditions. Evaluation Boards and Reference Boards are not subject to the same procedures as regular products regarding returned material analysis (RMA), process change notification (PCN) and product discontinuation (PD).

Evaluation Boards and Reference Boards are not commercialized products, and are solely intended for evaluation and testing purposes. In particular, they shall not be used for reliability testing or production. The Evaluation Boards and Reference Boards may therefore not comply with CE or similar standards (including but not limited to the EMC Directive 2004/EC/108 and the EMC Act) and may not fulfill other requirements of the country in which they are operated by the customer. The customer shall ensure that all Evaluation Boards and Reference Boards will be handled in a way which is compliant with the relevant requirements and standards of the country in which they are operated.

The Evaluation Boards and Reference Boards as well as the information provided in this document are addressed only to qualified and skilled technical staff, for laboratory usage, and shall be used and managed according to the terms and conditions set forth in this document and in other related documentation supplied with the respective Evaluation Board or Reference Board.

It is the responsibility of the customer's technical departments to evaluate the suitability of the Evaluation Boards and Reference Boards for the intended application, and to evaluate the completeness and correctness of the information provided in this document with respect to such application.

The customer is obliged to ensure that the use of the Evaluation Boards and Reference Boards does not cause any harm to persons or third-party property.
The Evaluation Boards and Reference Boards and any information in this document is provided "as is" and Infineon Technologies disclaims any warranties, express or implied, including but not limited to warranties of non-infringement of third-party rights and implied warranties of fitness for any purpose, or for merchantability.

Infineon Technologies shall not be responsible for any damages resulting from the use of the Evaluation Boards and Reference Boards and/or from any information provided in this document. The customer is obliged to defend, indemnify and hold Infineon Technologies harmless from and against any claims or damages arising out of or resulting from any use thereof.

Infineon Technologies reserves the right to modify this document and/or any information provided herein at any time without further notice.

Safety precautions

Note: *Please note the following warnings regarding the hazards associated with development systems.*

Table 1 Safety precautions

	Warning: *The DC link potential of this board is up to 400 V DC. When measuring voltage waveforms by oscilloscope, high voltage differential probes must be used. Failure to do so may result in personal injury or death.*
	Warning: *The evaluation board contains DC bus capacitors which take time to discharge after removal of the main supply. Before working on the drive system, wait five minutes for capacitors to discharge to safe voltage levels. Failure to do so may result in personal injury or death.*
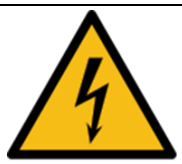	**Warning:** *The evaluation board is connected to the grid input during testing. Hence, high-voltage differential probes must be used when measuring voltage waveforms by oscilloscope. Failure to do so may result in personal injury or death.*
	Caution: *The heat sink and device surfaces of the evaluation or reference board may become hot during testing. Hence, necessary precautions are required while handling the board. Failure to comply may cause injury.*
	Caution: *Only personnel familiar with the drive, power electronics and associated machinery should plan, install, commission and subsequently service the system. Failure to comply may result in personal injury and/or equipment damage.*
	Caution: *The evaluation board contains parts and assemblies sensitive to electrostatic discharge (ESD). Electrostatic control precautions are required when installing, testing, servicing or repairing the assembly. Component damage may result if ESD control procedures are not followed. If you are not familiar with electrostatic control procedures, refer to the applicable ESD protection handbooks and guidelines.*
	Caution: *A drive that is incorrectly applied or installed can lead to component damage or reduction in product lifetime. Wiring or application errors such as undersizing the motor, supplying an incorrect or inadequate AC supply, or excessive ambient temperatures may result in system malfunction.*
	Caution: *The evaluation or reference board is shipped with packing materials that need to be removed prior to installation. Failure to remove all packing materials that are unnecessary for system installation may result in overheating or abnormal operating conditions.*

Table of contents

About this document **1**
Important notice **2**
Safety precautions **3**
Table of contents **4**
1 The board at a glance **5**
1.1 Interleaved PFC 5
1.2 Block diagram of the EVAL-PFC5KIKWWR5SYS 6
2 System and functional description **8**
2.1 General overview 8
2.1.1 UCC28070 — Analogy controller 9
2.1.2 IKW40N65WR5 — Fast-switching WR5 IGBT 9
2.1.3 IDW60C65D1 — Rapid1 power silicon diode 9
2.1.4 1ED44175 — Low-side gate driver 10
2.2 Board specifications 10
3 System design **11**
3.1 Schematics 11
3.2 Layout 15
3.3 Bill of material 18
3.4 Connector details 21
4 System performance **22**
4.1 Efficiency and PFC measurements 22
4.2 Start-up behavior 23
4.3 Input current and inductor current cancellation 24
4.4 Switching performance of the IGBT at steady state 27
4.5 Output ripple voltage 28
4.6 Input voltage and input current 30
4.7 Load step tests 31
4.8 Thermal measurements 33
5 Conclusion **35**
6 References and appendices **36**
6.1 Abbreviations and definitions 36
6.2 References 36
6.3 Additional information 36
Revision history **37**

1 The board at a glance

This section of the guide describes the basic concepts of an interleaved PFC and provides a brief introduction on the design of the EVAL-PFC5KIKWWR5SYS board.

1.1 Interleaved PFC

The standard boost converter is the most popular topology for power factor correction due to its simple control of the input current while keeping the output voltage constant. For medium power levels, to increase the output power and improve overall efficiency, several converters must be used in a parallel connection; for e.g. two channels or three channels connected in parallel. If the switches operate with a two-channel connection 180° out of phase or a three-channel connection 120° out of phase, the interleaved operation will share the same load capacitors and reduce the input current ripple significantly. This also eases the burden of filtering conducted electro-magnetic interference (EMI) noise and helps reduce the EMI filter and input capacitor sizes.

The interleaved PFC topology has several benefits, such as ease of implementation, the use of smaller (but more) components, and better heat distribution. On the other hand, the output capacitor current ripple is decreased and evenly distributed in each channel. This can extend the life of the capacitors and reduce its size and cost. Unlike single-boost converters, the inductors in an interleaved PFC handle only half or one-third of the current. Inductors with low inductance values can reach the same high power as single-boost converters and lower inductance also means smaller inductors and higher power density for a given power rating.

Figure 1 shows an example of a two-channel interleaved PFC. Its detailed operation principles and key waveforms are shown in Figure 2.

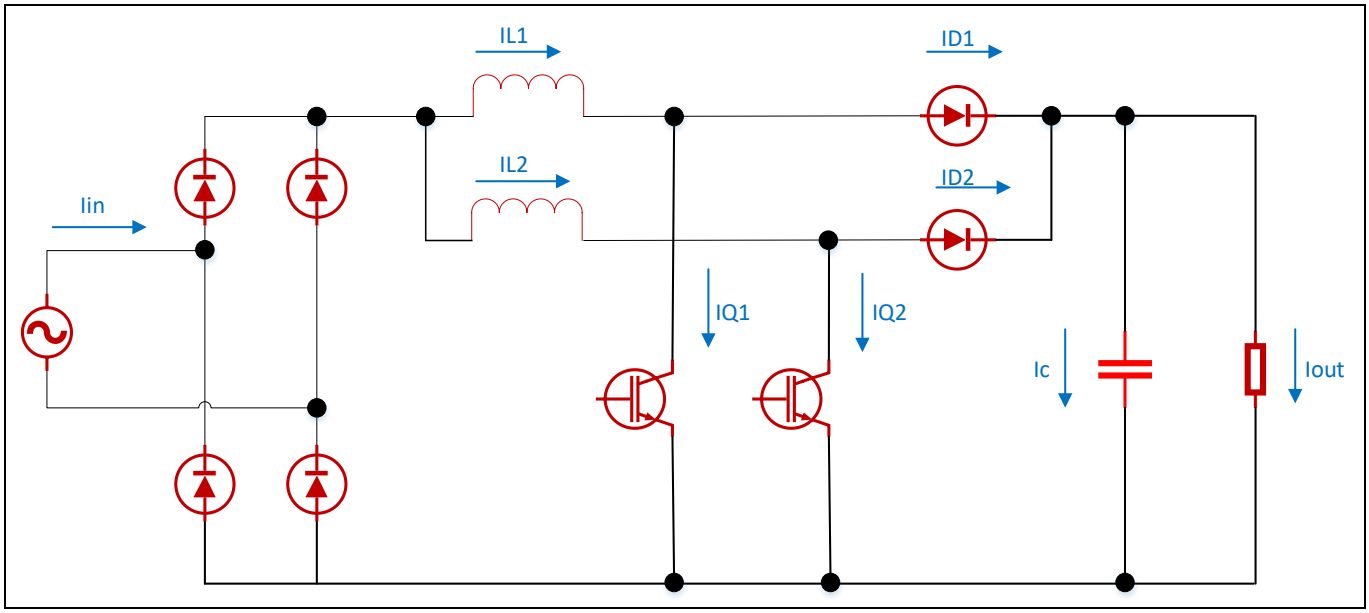

Figure 1 Block diagram of a two-channel interleaved PFC

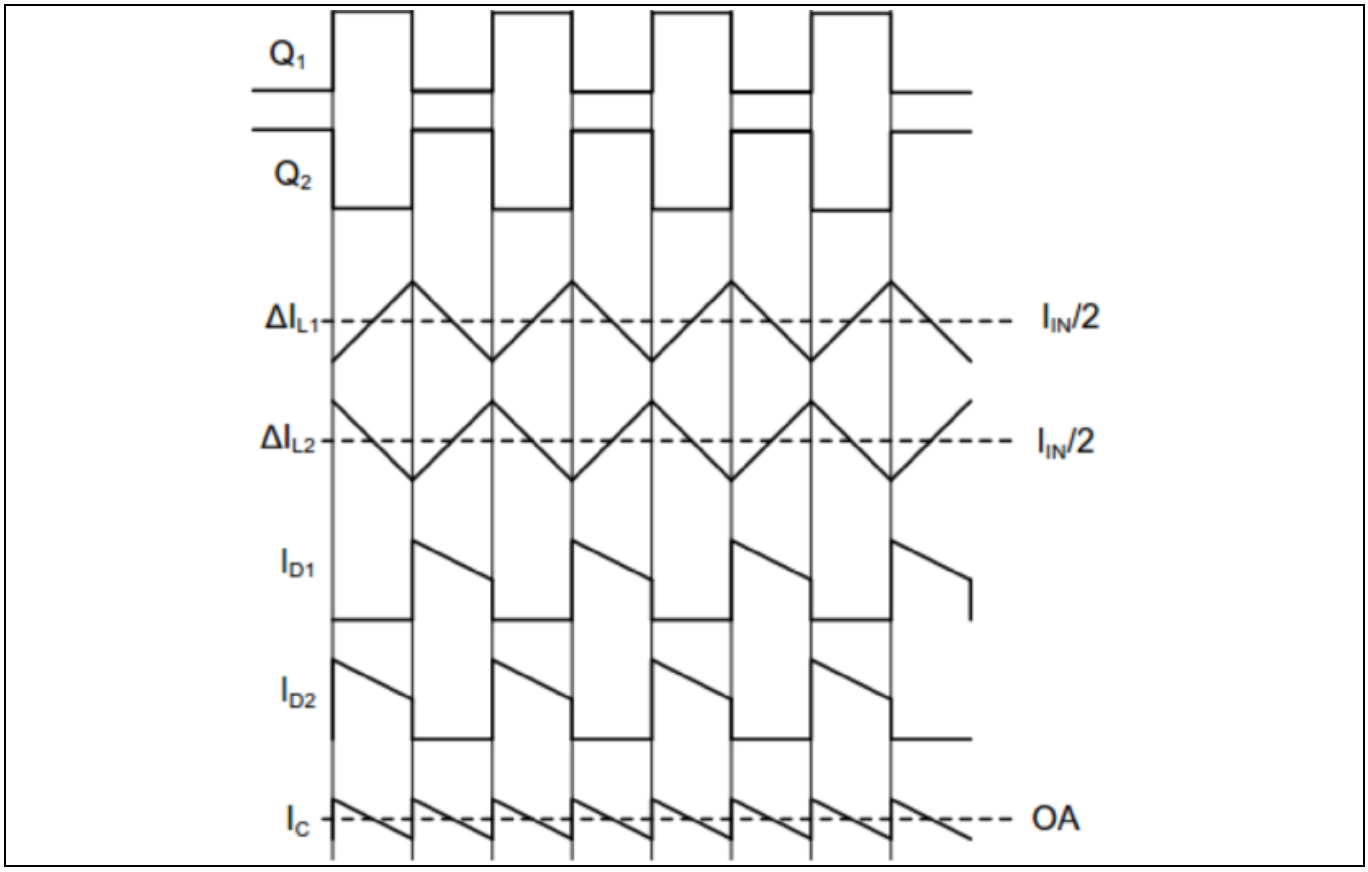

Figure 2 **Principles of operation of a two-channel interleaved PFC**

1.2 Block diagram of EVAL-PFC5KIKWWR5SYS

Reducing the size of power converters by increasing their switching frequency and reducing the size of their magnetic component is a goal that has been pursued for decades. This is especially true when using IGBTs in a switching mode power supply. Higher switching frequency means smaller size and lower cost. A high performance IGBT is a key component in helping customers gain a bigger market share. Infineon's WR5 IGBT is specifically optimized for full-rated, hard-switching applications with an excellent price to performance ratio. Its use is recommended in the AC-DC PFC stage of cost-sensitive applications. The EVAL-PFC5KIKWWR5SYS evaluation board is used for demonstrating the switching performance of the TRENCHSTOP™ 5 WR5 IGBT IKW40N65WR5 with high switching frequencies (up to 60 kHz) in an interleaved PFC application.

Figure 3 shows the block diagram of EVAL-PFC5KIKWWR5SYS.

This reference design includes:

- Two-channel boost converters
- A high-speed, 650 V, 40 A, reverse conducting TRENCHSTOP™ 5 WR5 IGBT in TO-247 package
- Gate driver ICs for WR5 IGBTs
- Rapid1 power silicon diode for boost rectification
- Loss-free current monitoring for switching current
- 15 V auxiliary power supply
- Connectors for easy set up
- External force cooling for high-power applications

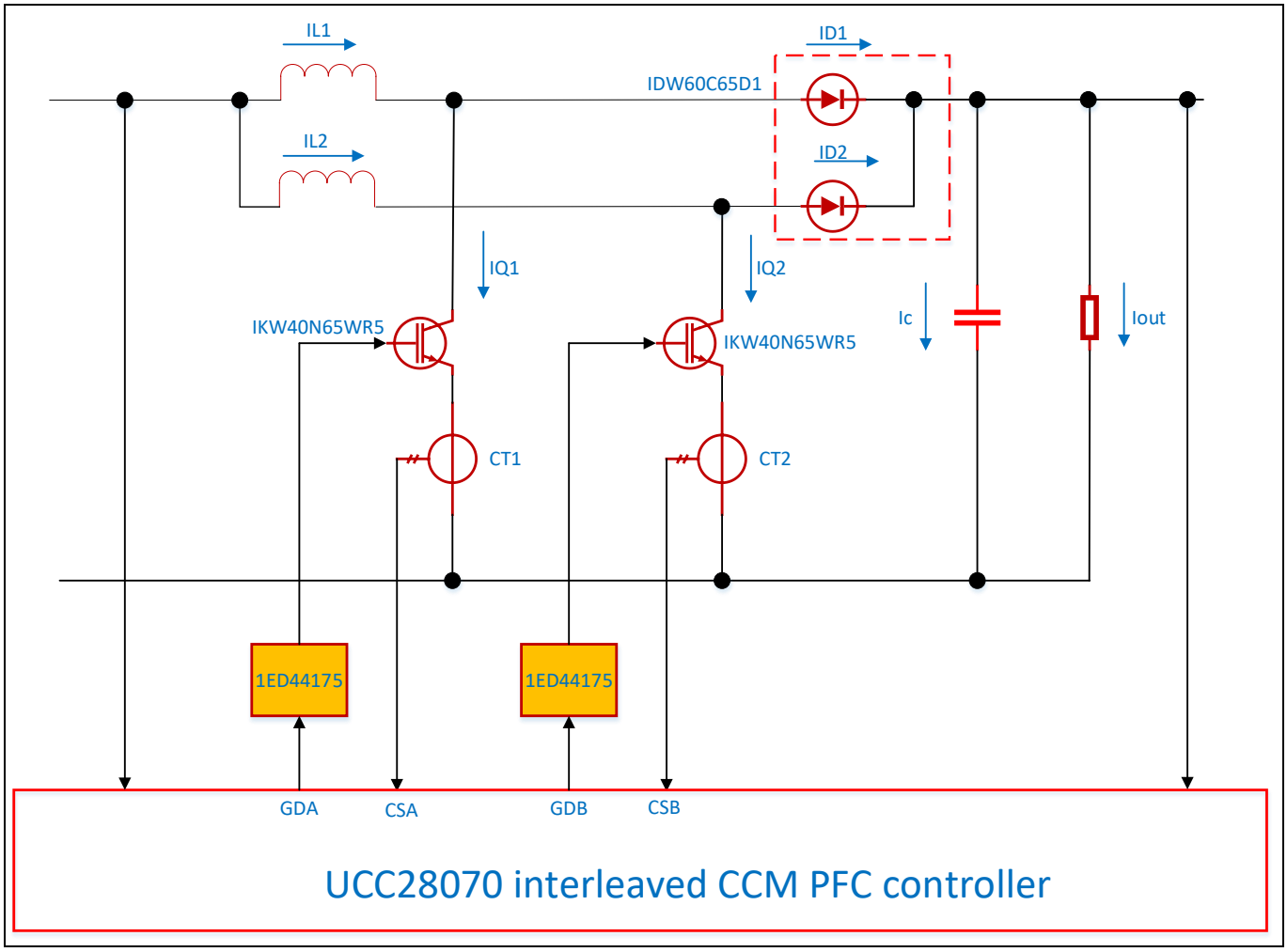

Figure 3 **Block diagram of EVAL-PFC5KIKWWR5SYS**

2 System and functional description

2.1 General overview

EVAL-PFC5KIKWWR5SYS is the reference design for a 5 kW interleaved PFC for, but not limited to, floor-standing air conditioners in major home appliances.

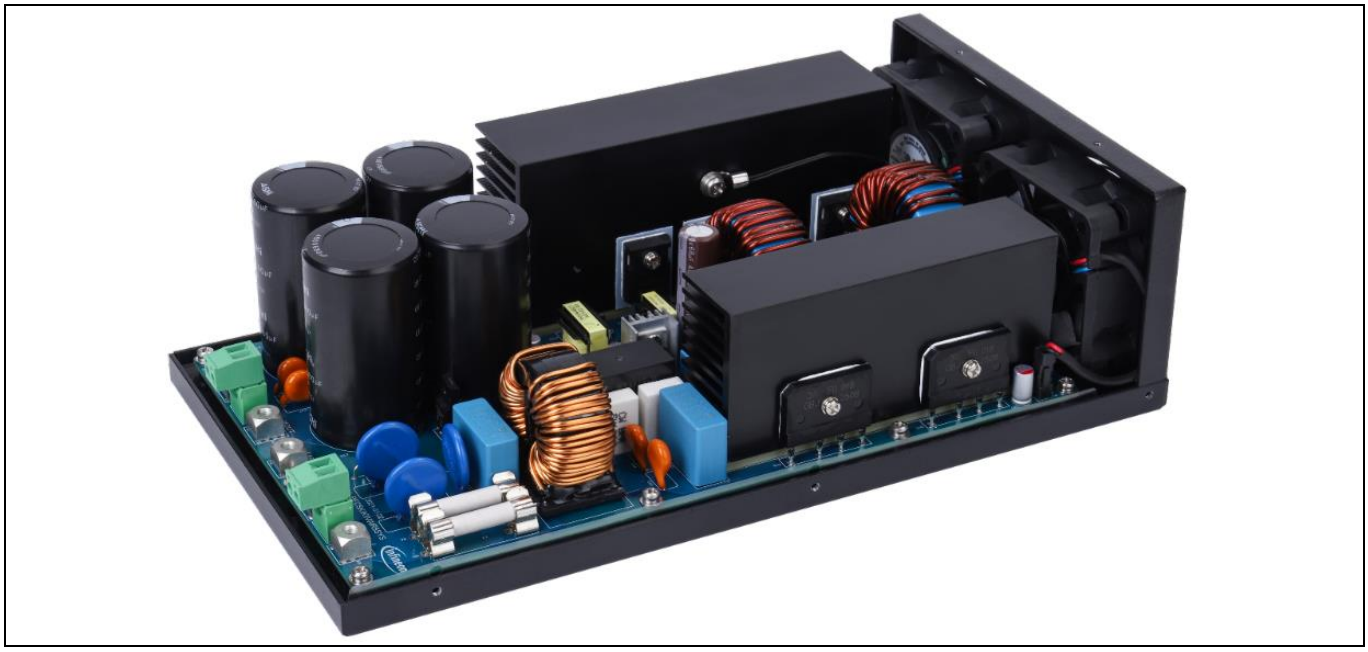

Figure 4 Board view of EVAL-PFC5KIKWWR5SYS

Design characteristics of the EVAL-PFC5KIKWWR5SYS evaluation board include:

Board performance

- High power factor, PF > 0.995
- Low THDi
- High efficiency

Control technology

- Continuous conduction mode (CCM) average current control
- Frequency-dithering for enhanced EMI reduction

Fault protection

- Input undervoltage protection and overvoltage protection
- Output overvoltage protection
- Open-circuit protection for AC input and DC output
- Cycle-by-cycle peak current limiting
- Thermal shutdown for power semiconductors

2.1.1 UCC28070 — Analogy controller

Infineon does not have a dedicated interleaved PFC controller. Therefore, the UCC28070 from Texas Instruments (popular choice in this field) was chosen as the analogy controller. Figure 5 shows a simplified application diagram of the UCC28070.

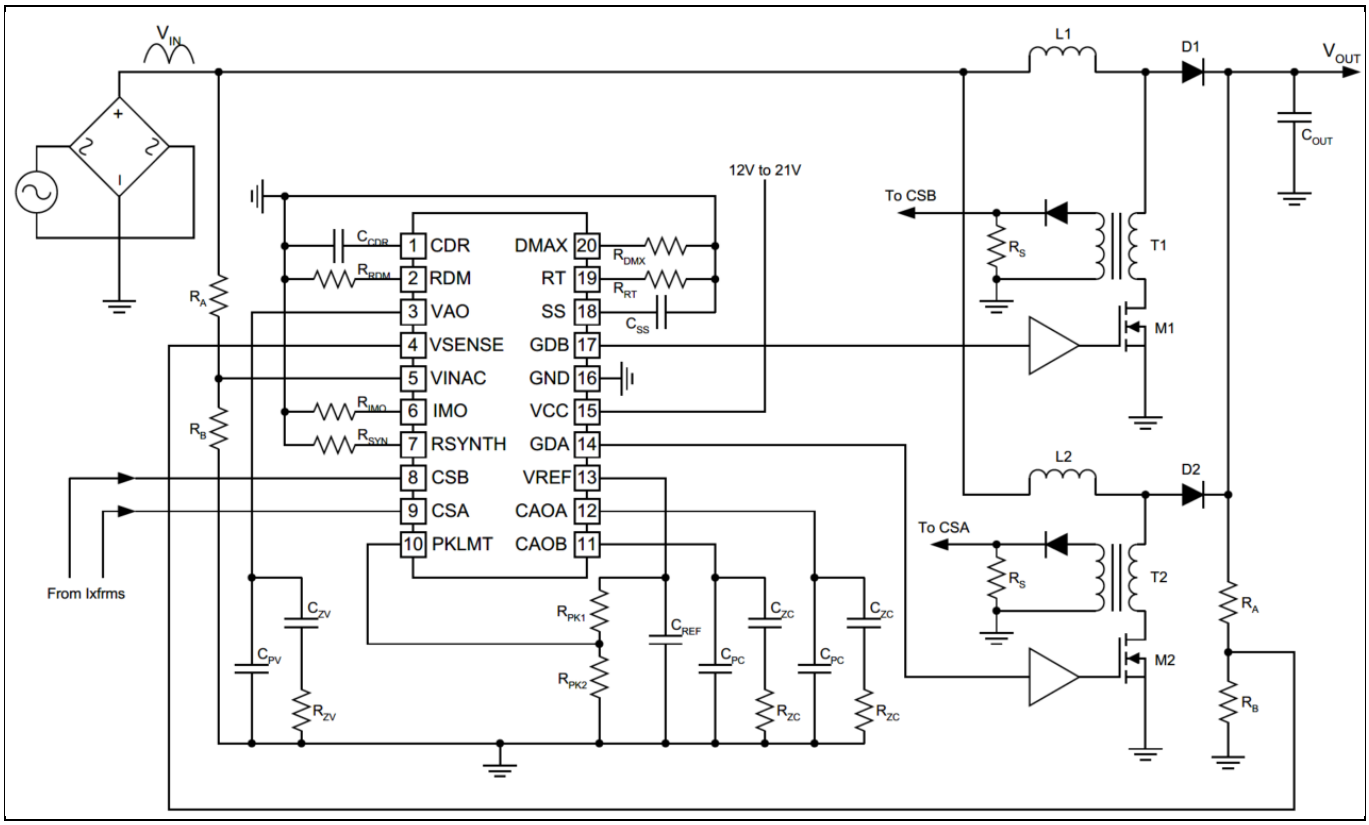

Figure 5 Simplified application diagram of the UCC28070

2.1.2 IKW40N65WR5 — Fast-switching WR5 IGBT

The IKW40N65WR5 is a high-speed, 650 V, 40 A, reverse-conducting TRENCHSTOP™ 5 WR5 IGBT in a TO-247 package. It is optimized for hard-switching applications with the best price to performance ratio and is a good fit with mainstream designs in which F_{SW} > 20 kHz. The key characteristics of the IKW40N65WR5 are:

- A very low V_{CEsat} of 1.35 V at 25°C
- Low E_{tot}
- Soft recovery and low Q_{rr} for the diode
- Good $R_{(G)off}$ controllability
- Low T_j and T_c for lower heat sink and cooling costs

2.1.3 IDW60C65D1 — Rapid1 power silicon diode

The IDW60C65D1 is a 650 V, 60 A, rapid1 emitter-controlled power silicon diode in the common cathode configuration in a TO-247 package. It enables design optimization for a more compact dimension, easier assembly, and consequently lower costs. Its features include:

- Highest softness factor for ultimate softness and low EMI filtering
- A temperature-stable forward voltage (V_F) of 1.35 V

- Lowest I_{rrm} for lowest turn-on losses on the boost switch

2.1.4 1ED44175 — Low-side gate driver

The 1ED44175 is an EiceDRIVER™ 25 V single-channel, low-side, non-inverting gate driver with typical 2.6 A source and sink currents in a tiny 6-lead PG-SOT23 package. The 1ED44175N01B provides cost and space savings by integrating the comparator. It utilizes Infineon's proprietary latch-immune complementary metal-oxide-semiconductor transistor (CMOS) technology to enable a rugged, monolithic construction while achieving best-in-class fault reporting accuracy with an overcurrent protection (OCP) threshold tolerance of +/- 5%.

Its features include:

- -0.246 V overcurrent threshold with a tolerance accuracy of ± 5%
- Overcurrent detection with negative voltage input
- Single pin for fault output and enable
- Programmable fault-clear time
- Undervoltage lockout for IGBTs
- CMOS Schmitt-triggered inputs
- Compatible with 3.3 V, 5 V, and 15 V input logic
- Output in phase with input
- OCP pin with - 10 V_{dc} negative input capability
- 3 kV electronic static discharge (ESD)

2.2 Board specifications

Table 2 lists the key specifications of the reference design used in EVAL-PFC5KIKWWR5SYS.

Table 2 Specifications of EVAL-PFC5KIKWWR5SYS

NO.	Parameters	Symbol	Value
1	Output power	P_{out}	5000 watts
2	Input voltage range (rms)	V_{in}	180 V_{ac} to 264 V_{ac}
3	Input frequency range	f	50 Hz or 60 Hz
4	Output voltage	V_{DC}	400 V
5	Output ripple voltage	V_{ripple}	20 V
6	Inductance	L1, L2	53 µH
7	Switching frequency	F_s	60 kHz

3 System design

This chapter discusses all the necessary technical data such as schematics, layout, and components that are essential to meet individual customer requirements and to make the EVAL-PFC5KIKWWR5SYS evaluation board a basis for development or modification.

EVAL-PFC5KIKWWR5SYS consists of three blocks — power stage, controller circuit, and auxiliary supply — all of which are on the same board. All surface mounted devices are mounted on the bottom layer, enabling customers to modify parameters if necessary.

3.1 Schematics

There are a total of six schematic diagrams in the design of EVAL-PFC5KIKWWR5SYS. The images in this section describe the functions of each individual schematic.

Figure 6 shows the converter's EMI filter, soft-start control, and diode rectifiers. Connectors X1, X3, and X6 connect to the grid line, neutral, and ground respectively. Three metal oxide varistors (MOV) R58, R60, and R61 and a gas discharge tube GT1 consist of a surge protection circuit. The positive temperature coefficient (PTC) resistors R54 and R55 limit the input current ramp slope at start-up. Once the voltage of output capacitors reaches about 230 V, the K1 relay turns on and bypasses R54 and R55. At this point, the PFC converter works with a very high efficiency.

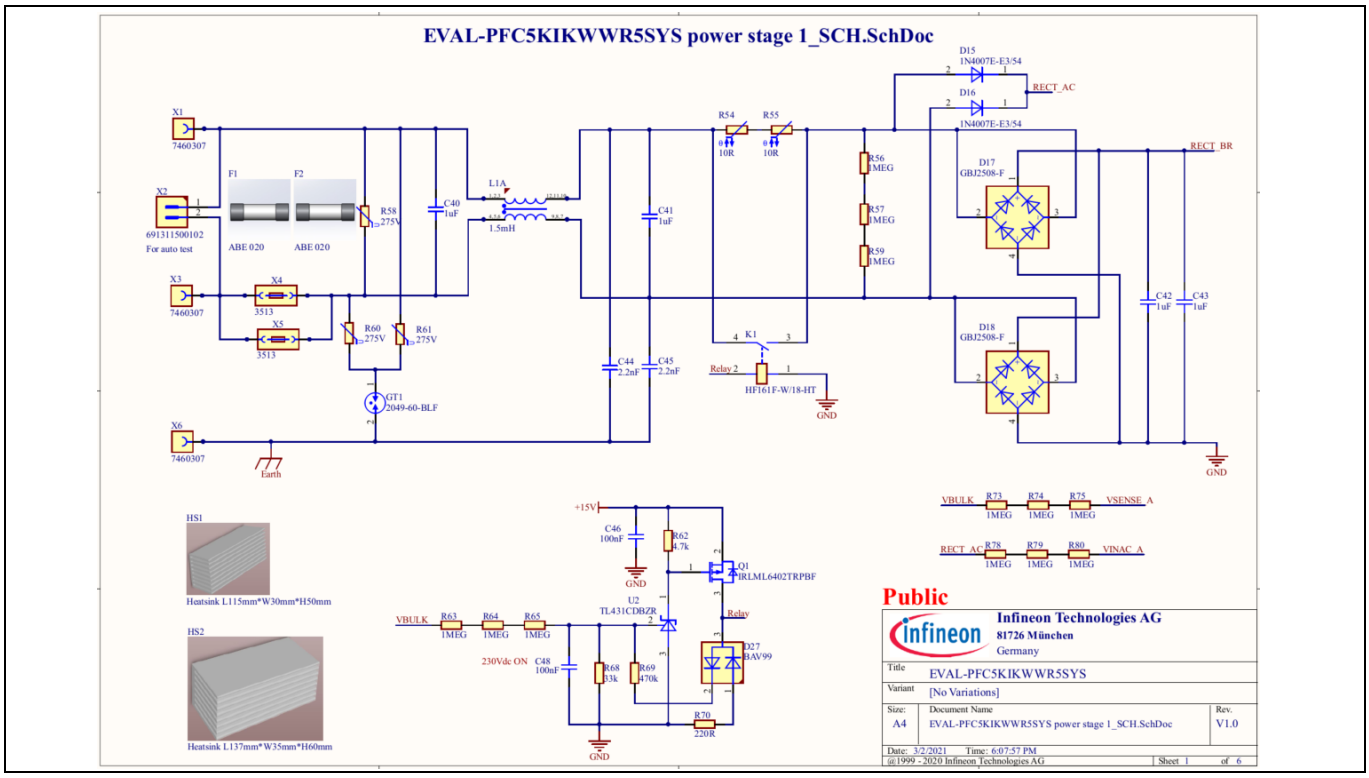

Figure 6 EMI filter, soft start control, and rectifiers of EVAL-PFC5KIKWWR5SYS

Figure 7 shows two-channel boost converters connect in parallel with a 180° out-of-phase control. Each channel has a WR5 IGBT (IKW40N65WR5) as the main switch and a rapid1 fast-recovery diode (IDW60C65D1) with a common cathode as the boost diodes for both channels. In practical applications, customers can select two separated silicon fast-recovery diodes or two SiC diodes to replace this common cathode diode, and use them as D21 and D22. A current transformer monitors the IGBT current for normal operation and limits the cycle-by-

cycle current. Each gate driver (1ED44715) matches one IGBT. Two boost inductors that come from the magnetic device supplier POCO perform better than inductors with traditional powder materials.

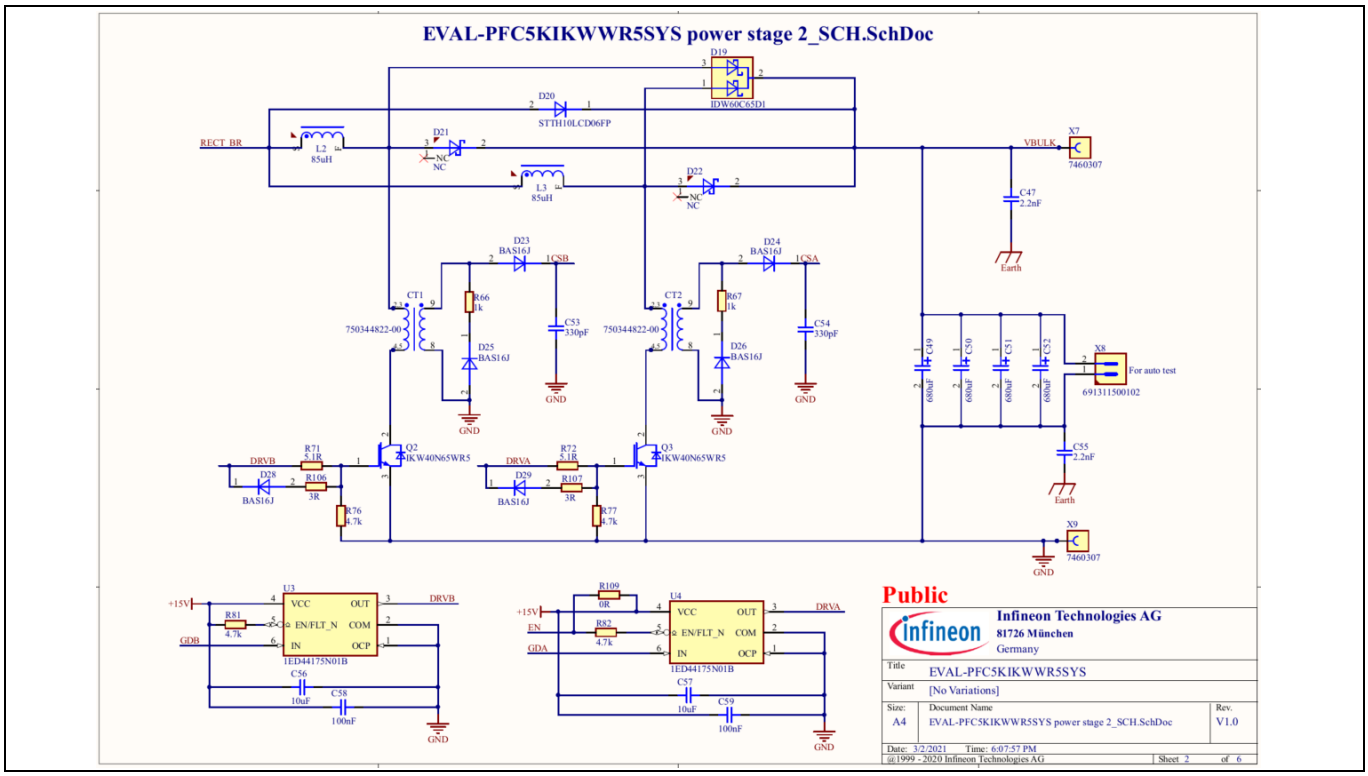

Figure 7 Interleaved PFC power stage of EVAL-PFC5KIKWWR5SYS

Figure 8 shows the UCC28070 analog control and its parameter settings with external resistors and capacitors. The potentiometer (R115) sets the converter's switching frequency and customers can adjust this switching frequency easily.

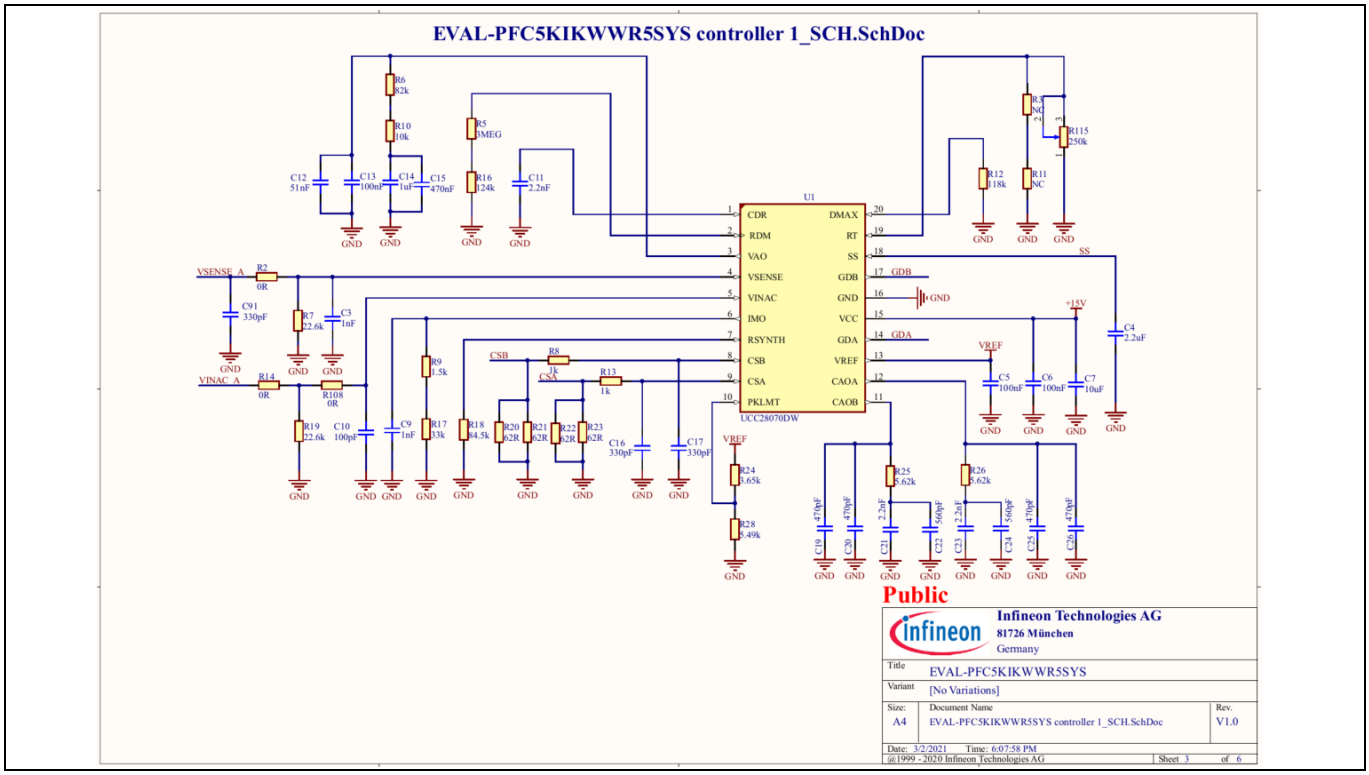

Figure 8 **UCC28070 parameter settings for EVAL-PFC5KIKWWR5SYS**

Great care has been taken to select the proper value for the RC filters applied to V_{SENSE} and V_{INAC} to prevent the destabilizing effects of excess noise on these inputs in a noisy environment. If applied, the RC time constant of these two pins should not exceed 100 µs. More information about how to control the UCC28070 with external components can be found in [1].

Figure 9 shows fault protection in EVAL-PFC5KIKWWR5SYS. Thermal shutdown of the power semiconductors is implemented by an external comparator. If the cooling fans fixed on the mechanical box fail or do not work, the resistance of the negative temperature coefficient (NTC) fixed on the heat sink decreases dramatically and the SS pin of the UCC28070 is pulled down to the ground, in which case both gate signals are disabled.

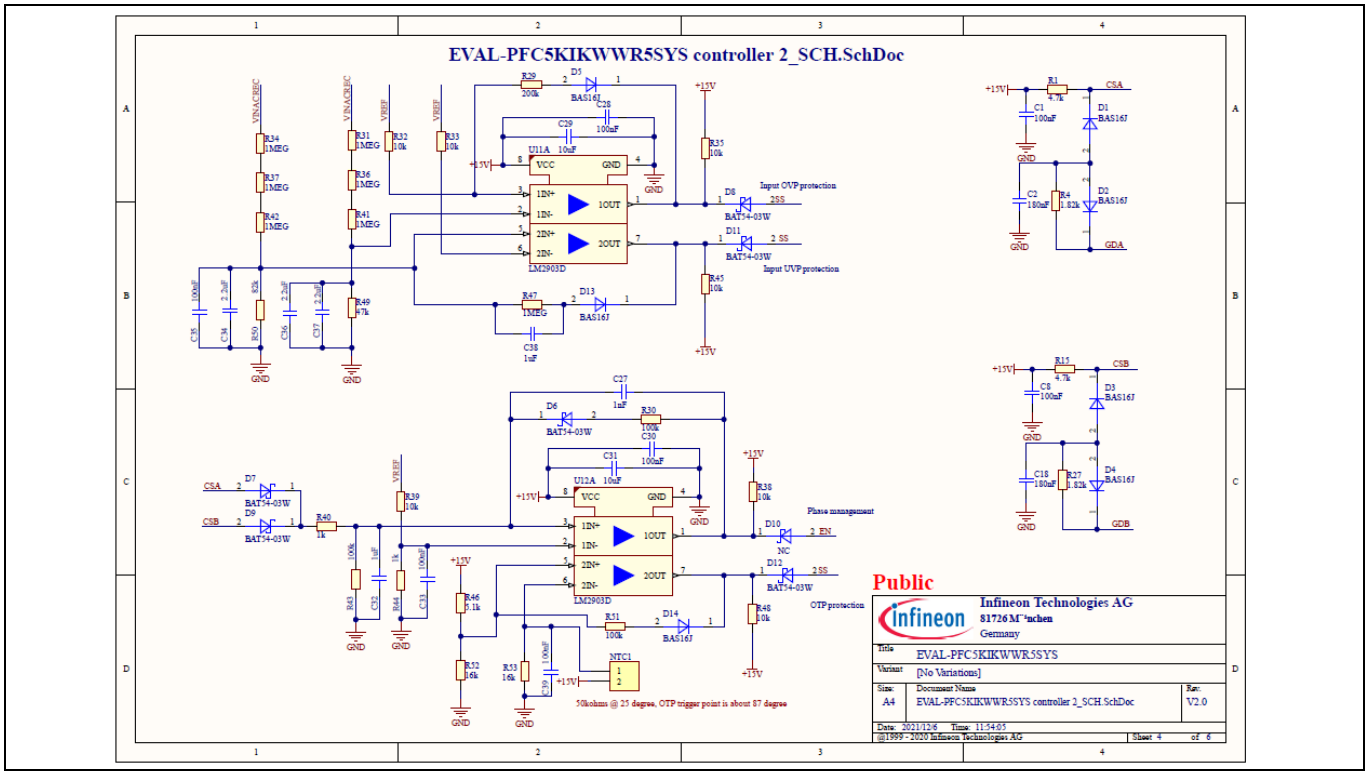

Figure 9 Fault protection in EVAL-PFC5KIKWWR5SYS

The UCC28070 already has an integrated output overvoltage protection through the continuous monitoring of V_{VSENSE}, therefore, the input overvoltage and undervoltage protection in this converter are implemented by an external comparator, both of which are connected to the SS pin of the UCC28070.

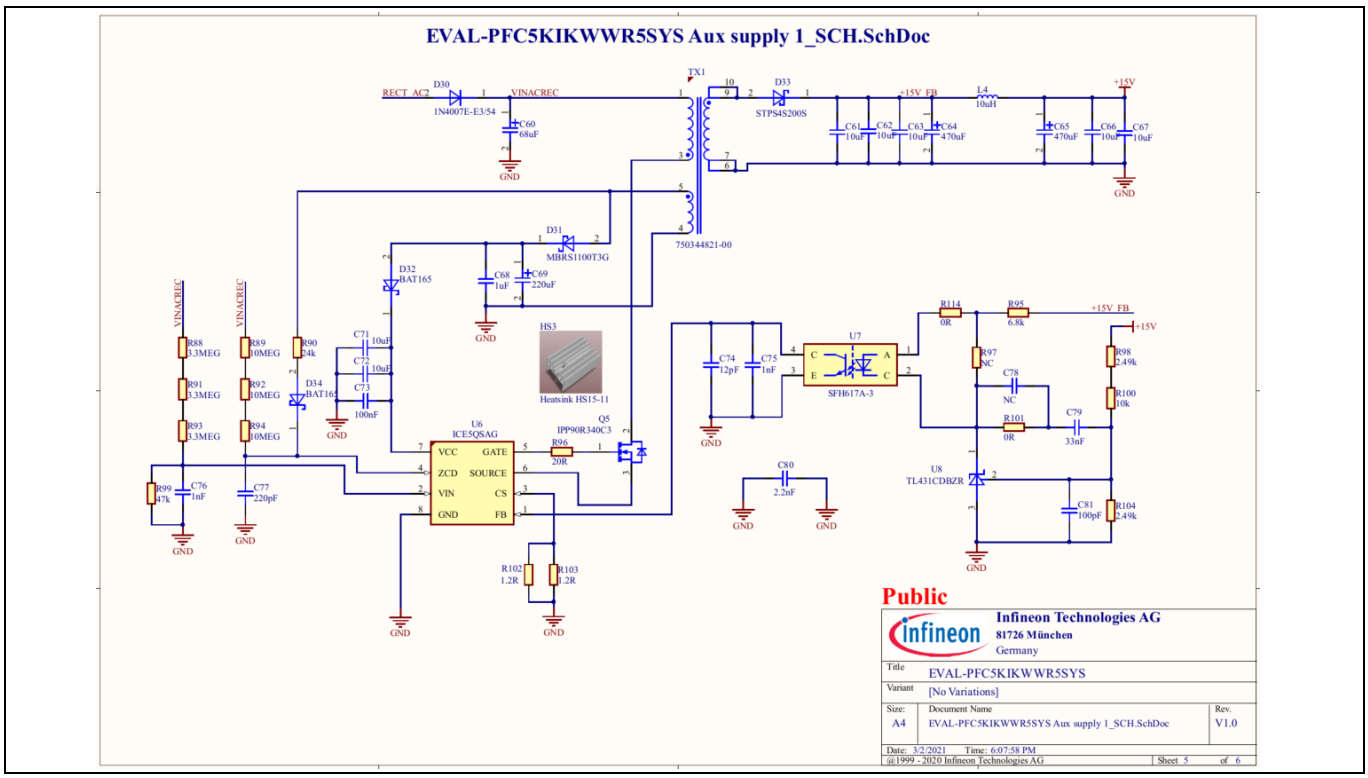

Figure 10 Auxiliary supply schematic of EVAL-PFC5KIKWWR5SYS

Figure 10 shows the auxiliary supply schematic of the evaluation board that supplies voltage to the controller circuit, gate drivers, and cooling fans. The ICE5QSAG [2] is a quasi-resonance mode controller for the soft-switching operation of Q5. It increases the system efficiency. In a simplified design of the flyback transformer (TX1 in Figure 10), there is only one secondary winding with an output voltage of 15 V — an optimized voltage for driving IGBTs.

The maximum recommended voltage for cooling fans is 13.8 V. Therefore, as shown in Figure 11, two low dropout regulator chips (IFX1963) provide about 13.6 V voltage to the fans directly, without regulating the fan speed.

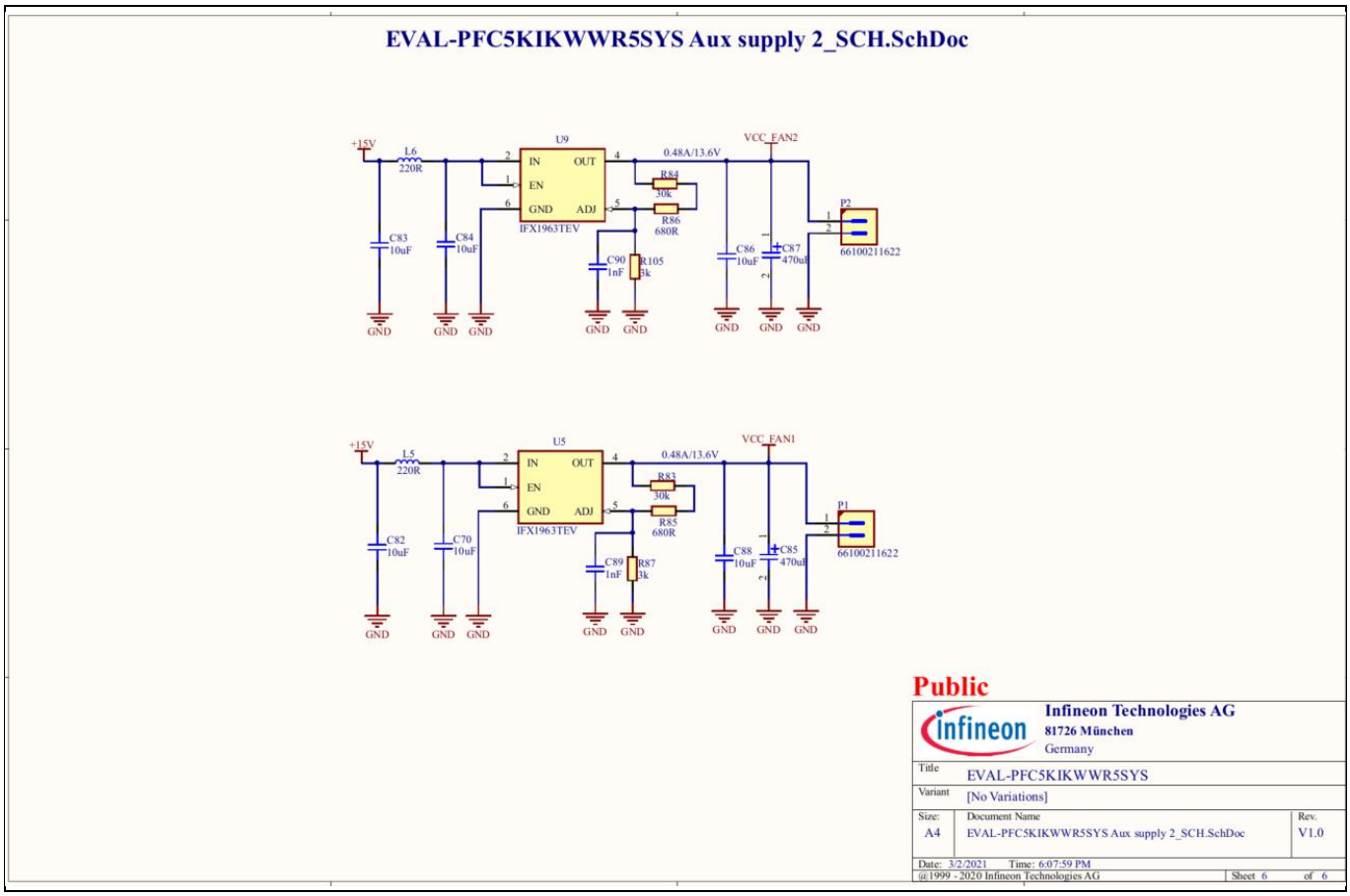

Figure 11 Low-dropout regulator for cooling fans in EVAL-PFC5KIKWWR5SYS

3.2 Layout

The layout of EVAL-PFC5KIKWWR5SYS can help customers understand the placements of components and the routing of wires for the whole board. In the default layout, the PCB has four electrical layers with 70 µm of copper and a dimension of 244 mm × 142 mm. The PCB board's thickness is 2 mm. Please visit Infineon's website (https://www.infineon.com/cms/en/product/evaluation-boards/eval-pfc5kikwwr5sys/) to obtain detailed information and the latest Gerber files.

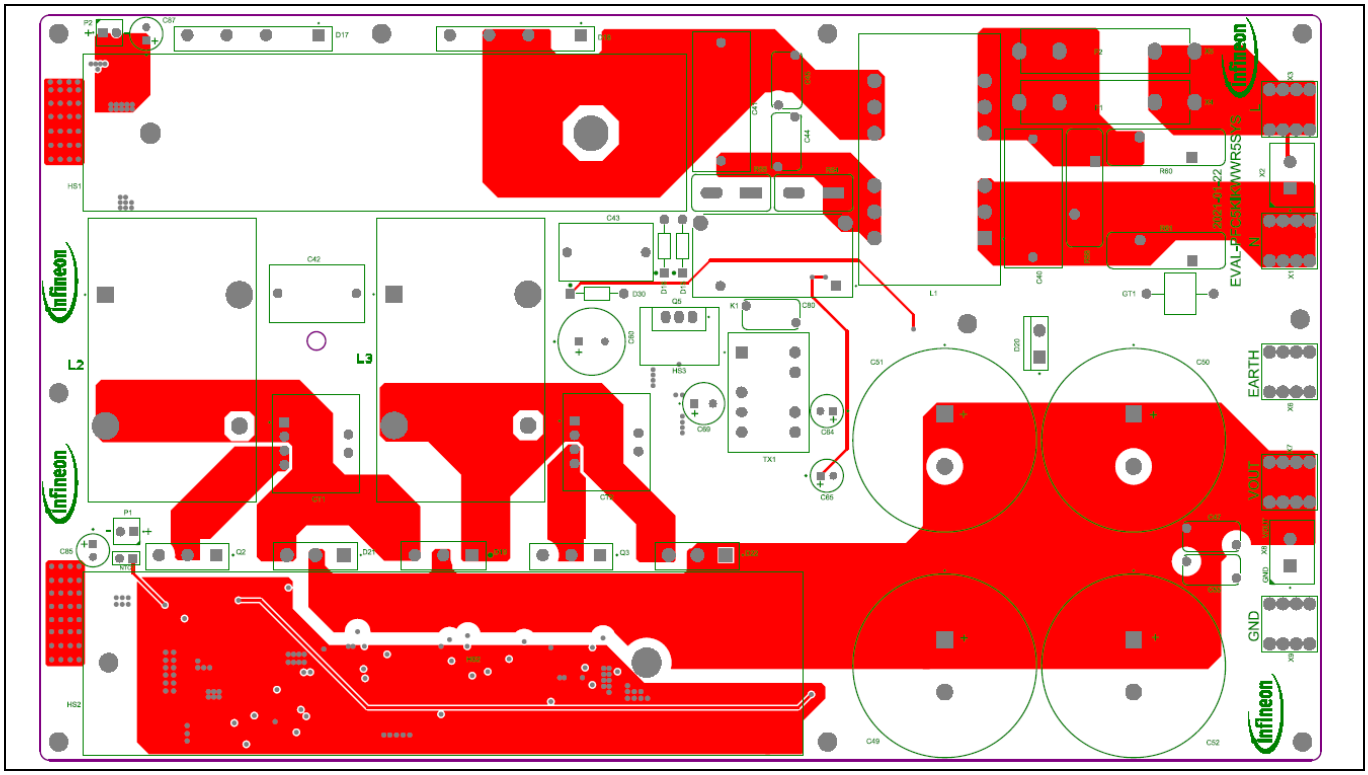

Figure 12 Top layer routing of EVAL-PFC5KIKWWR5SYS

Figure 12 shows the top layer routing of the evaluation board.

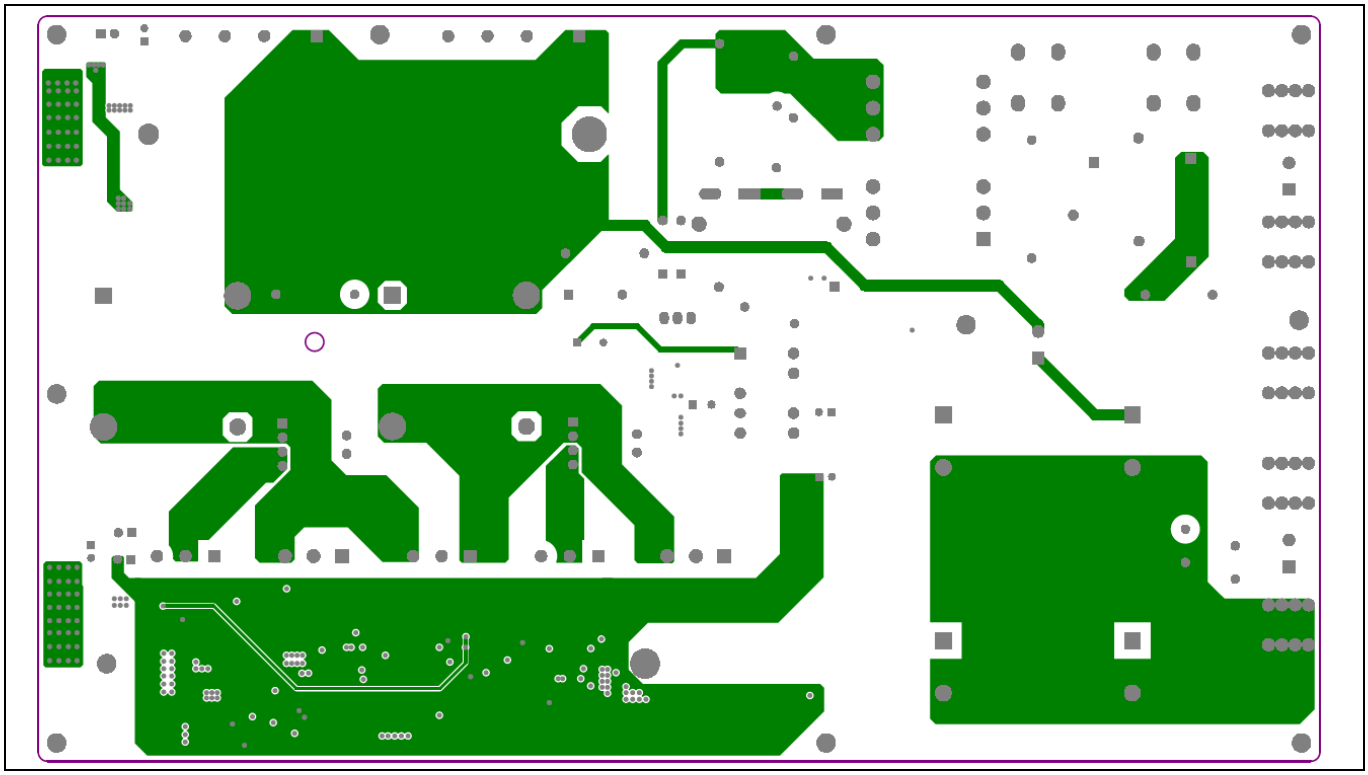

Figure 13 Mid layer 1 routing of EVAL-PFC5KIKWWR5SYS

Figure 13 shows the mid layer 1 routing of the evaluation board.

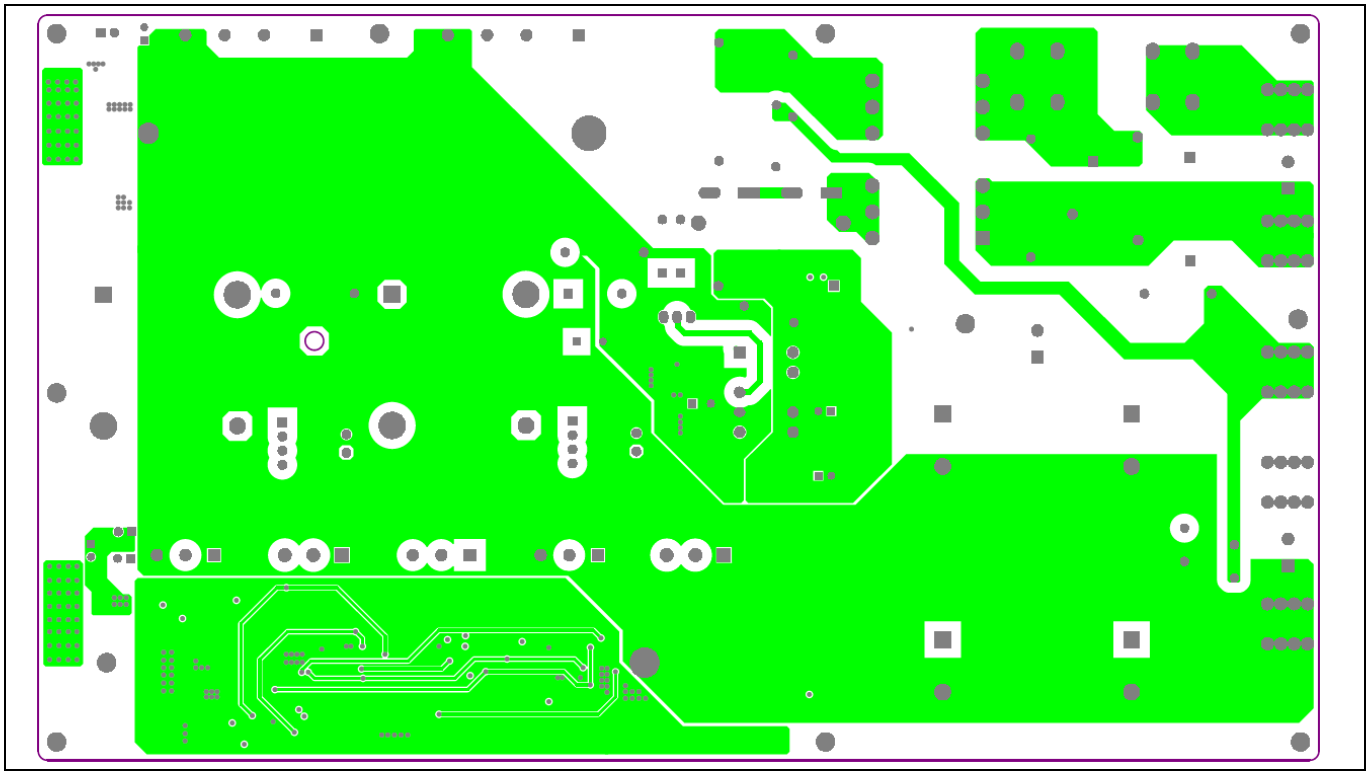

Figure 14 Mid layer 2 routing of EVAL-PFC5KIKWWR5SYS

Figure 14 shows the mid layer 2 routing of the evaluation board.

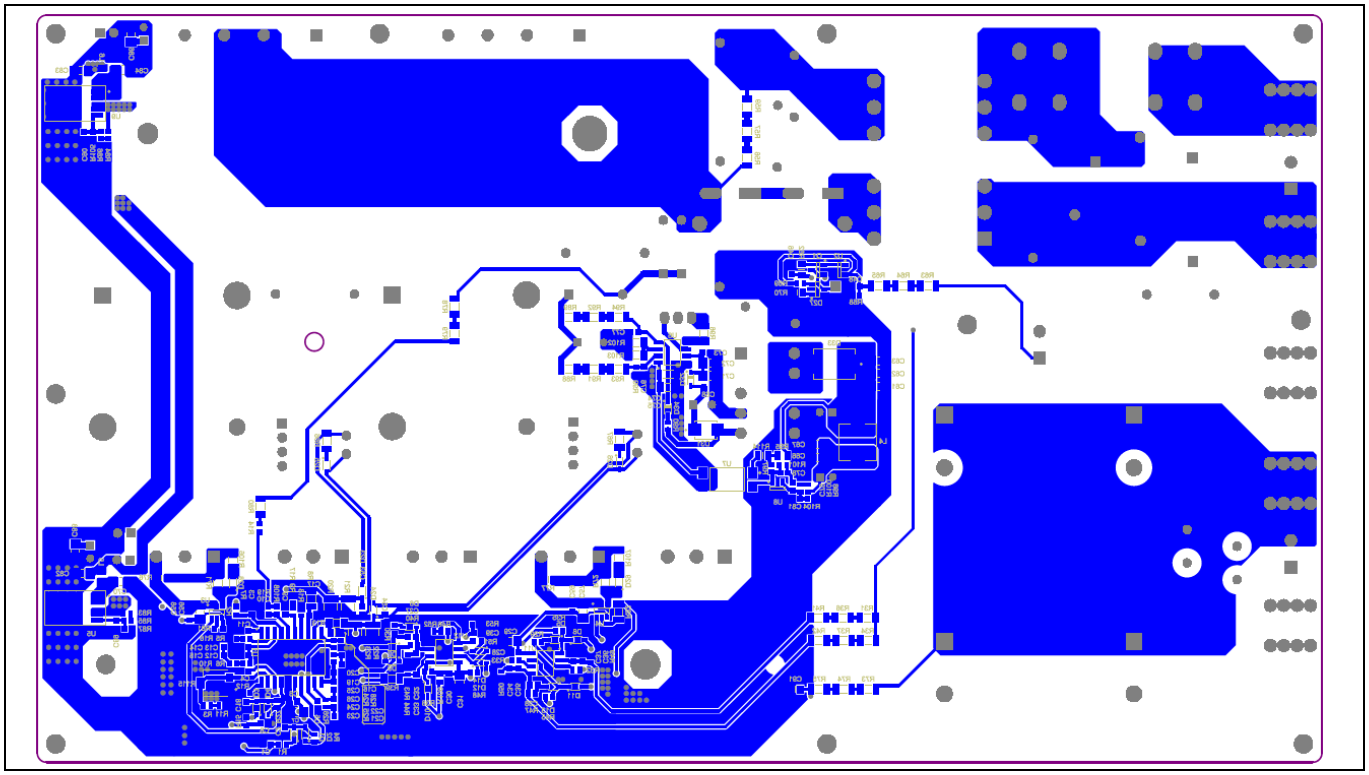

Figure 15 Bottom layer routing of EVAL-PFC5KIKWWR5SYS

Figure 15 shows the bottom layer routing of the evaluation board.

3.3 Bill of material

The complete bill of material for EVAL-PFC5KIKWWR5SYS can be downloaded (a customer login is required) from the Download section on the homepage of Infineon's website (https://www.infineon.com/cms/en/product/evaluation-boards/eval-pfc5kikwwr5sys/).

Table 3 BOM for EVAL-PFC5KIKWWR5SYS

Quantity	Ref. Designator	Value	Description	Manufacturer	Manufacturer P/N
15	C1, C5, C6, C8, C13, C28, C30, C33, C35, C39, C46, C48, C58, C59, C73	100nF	Chip monolithic ceramic capacitor	MuRata	GRM188R71E104KA01,
2	C2, C18	180nF	Chip monolithic ceramic capacitor	MuRata	GCM188R71E184JA55
6	C3, C9, C27, C76, C89, C90	1nF	Chip monolithic ceramic capacitor	MuRata	GRM188R71E102KA01,
4	C4, C34, C36, C37	2.2uF	Chip monolithic ceramic capacitor	MuRata	GRM188R61E225KA12
18	C7, C29, C31, C56, C57, C61, C62, C63, C66, C67, C70, C71, C72, C82, C83, C84, C86, C88	10uF	Commercial grade multilayer ceramic chip capacitor	TDK Corporation	C3216X7R1E106K160AB
2	C10, C81	100pF	Multilayer ceramic chip capacitor, C-series, commercial grade, general	TDK Corporation	C1608X7R1H101M
1	C11	22nF	Chip monolithic ceramic capacitor	Kemet	C0603C223K5RACTU
2	C21, C23	2.2nF	Chip monolithic ceramic capacitor	MuRata	GRM188R71E222KA01
1	C12	51nF	Chip monolithic ceramic capacitor	MuRata	GCM188R71E473KA37
4	C14, C32, C38, C68	1uF	Chip monolithic ceramic capacitor	MuRata	GRM188R71E105KA12
1	C15	470nF	Chip monolithic ceramic capacitor	MuRata	GRM188R71C474KA88
2	C16, C91	330pF	Chip monolithic ceramic capacitor	MuRata	GRM216R71H331KA01
3	C17, C53, C54	330pF	Chip monolithic ceramic capacitor	MuRata	GRM188R71H331KA01
4	C19, C20, C25, C26	470pF	Chip monolithic ceramic capacitor	MuRata	GRM188R71H471KA01
2	C22, C24	560pF	Chip monolithic ceramic capacitor	MuRata	GRM1885C1E561JA01
2	C40, C41	1uF	Metallized polypropylene film capacitor	TDK Corporation	B32923C3105M000
1	C42	1uF	Metallized polypropylene film capacitor	Epcos	B32522N6105K000
1	C43	NC	Metallized polypropylene film capacitor	Epcos	B32522N6105K000
5	C44, C45, C47, C55, C80	2.2nF	AC-line rated ceramic disc capacitor class X1, 760 V_{AC}/class Y1, 500 V_{AC}	Vishay	440LD22-R
4	C49, C50, C51, C52	680uF	CAP/ELCO/680 uF/450 V/20% / - / -40℃ to 105℃ / 10.00 mm pitch X 35.00 mm dia X 62.00 mm H body / - / -	Aishi	ELP2WM681R60KT
1	C60	68uF	Miniature aluminum electrolytic capacitor	Aishi	EHL2WM680W50OT
4	C64, C65, C85, C87	470uF	Aluminum electrolytic capacitor/FC series	Aishi	SPD1CM102G12O00RA XXX
1	C69	220uF	Miniature aluminum electrolytic capacitor	Aishi	EML1EM221F09OT

Quantity	Ref. Designator	Value	Description	Manufacturer	Manufacturer P/N
1	C74	12pF	Chip monolithic ceramic capacitor	MuRata	GRM31A5C2H120JW01
1	C75	1nF	Chip monolithic ceramic capacitor	MuRata	GRM319R71H102JA01
1	C77	220pF	Chip monolithic ceramic capacitor	MuRata	GRM188R71H221KA01
1	C78	NC	Multilayer ceramic chip capacitor, C-series, commercial grade, general	TDK Corporation	C1608X7R1H101M
1	C79	33nF	Chip monolithic ceramic capacitor	MuRata	GRM188R71E333JA01
2	CT1, CT2	750344822-00	Transformer, 10.50 mH, turn ratio 400:1	Würth Elektronik	750344822-00
13	D1, D2, D3, D4, D5, D13, D14, D23, D24, D25, D26, D28, D29	BAS16J	Silicon switching diode	Nexperia	BAS16J
6	D6, D7, D8, D9, D11, D12	BAT54-03W	Silicon Schottky diode	Infineon Technologies	BAT54-03W
1	D10	NC	Silicon Schottky diode	Infineon Technologies	BAT54-03W
3	D15, D16, D30	1N4007E-E3/54	General purpose plastic rectifier	Vishay	1N4007E-E3/54
2	D17, D18	GBJ2508-F	Glass passivated bridge rectifier 600V	Micro Commercial Components	GBJ2508-F
1	D19	IDW60C65D1	650 V rapid 1 diode, IF 30/60A,TO247-3	Infineon Technologies	IDW60C65D1
1	D20	STTH10LCD06FP	Turbo2 ultrafast high voltage rectifier for flat-panel displays	STMicroelectronics	STTH10LCD06FP
2	D21, D22	NC	650 V rapid1 diode, 30 A, TO247-3	Infineon Technologies	IDW30E65D1
1	D27	BAV99	High-speed switching diode	Nexperia	BAV99
1	D31	MBRS1100T3G	Schottky power rectifier	ON Semiconductor	MBRS1100T3G
2	D32, D34	BAT165	Medium power AF Schottky diode	Infineon Technologies	BAT165
1	D33	STPS4S200S	Surface mount Schottky barrier rectifier	STMicroelectronics	STPS4S200S
2	F1, F2	12.8mR	Fast-acting fuse cartridge, 20 A/250 V	Conquer	ABE 020
1	GT1	2049-60-BLF	RES/STD/ - / - / 30% / - / -30℃ to 85℃/12.80 mm pitch, 6.00 mm L X 8.00 mm W, 8.3 mm H body / - / -	Bourns	2049-60-BLF
1	HS1	Heatsink L115mm*W30mm*H50mm	Heat sink L115 mm * W30 mm * H50 mm	-	Heatsink L115mm*W30mm*H50mm
1	HS2	Heatsink L137mm*W35mm*H60mm	Heat sink L137 mm * W35 mm * H60 mm	-	Heatsink L137mm*W35mm*H60mm
1	HS3	Heatsink HS15-11	Heat sink L15 * W11	-	Heatsink HS15-11
1	K1	HF161F-W/18-HT	Solar relay, applicable to inverter used for photovoltaic power generation systems	HongFa	HF161F-W/18-HT
1	L1	1.5mH	Common mode power line choke	Würth Elektronik	7448063801
2	L2, L3	85uH	IND/STD/85 µH / - / 10% / - /16 mR/THT/Inductor, THT, 4-pin, 54.00 mm L X 32.00 mm W X 56.00 mm H body / THT / -	POCO	PI200273V1
1	L4	10uH	IND/STD/10uH/4A/20%/-40℃ to 150℃ / 33 mR/SMD/Inductor, SMD, 6.90 mm L X 6.90 mm W X 5.00 mm H body/SMD/ -	Würth Elektronik	744314101
2	L5, L6	220R	Chip ferrite bead	Würth Elektronik	742792031
1	NTC1	AYN-MF56-503F-3950FB-28#-100	Header, 2-pin		AYN-MF56-503F-3950FB-28#-100
2	P1, P2	66100211622	Connector header VERT 2POS 2.54 MM	Würth Elektronik	66100211622

Quantity	Ref. Designator	Value	Description	Manufacturer	Manufacturer P/N
1	Q1	IRLML6402TRPBF	HEXFET P-channel power MOSFET, 20 V, 3.7 A	Infineon Technologies	IRLML6402TRPB
2	Q2, Q3	IKW40N65WR5	High-speed fast IGBT in TRENCHSTOPTM 5 technology, VCE 650V, IC 40A	Infineon Technologies	IKW40N65WR5
1	Q5	IPP90R340C3	900V CoolMOS C3 power transistor, RDS(on) 340 mΩ	Infineon Technologies	IPP90R340C3
3	R1, R15, R81	4.7k	General purpose chip resistor	Yageo	RC0603FR-074K7L
4	R2, R14, R108, R109	0R	0R/75V	Panasonic	ERJ3GEY0R00V
1	R3	NC	Standard thick film chip resistor	Vishay	CRCW0603115KFK,
1	R11	NC	Standard thick film chip resistor	Vishay	CRCW060310K0FK
1	R97	NC	Standard thick film chip resistor	Vishay	CRCW06031K20FK
2	R4, R27	1.82k	Standard thick film chip resistor	Vishay	CRCW06031K82FK
1	R5	180K	Standard thick film chip resistor	Vishay	CRCW0603180KFK
2	R6, R50	82k	Standard thick film chip resistor	Vishay	CRCW060382K0FK
2	R7, R19	22.6k	Standard thick film chip resistor	Vishay	CRCW060322K6FK
3	R8, R66, R67	1k	Standard thick film chip resistor	Vishay	CRCW12061K00FK
1	R9	1.5k	Standard thick film chip resistor	Vishay	CRCW06031K50FK
8	R10, R32, R33, R35, R38, R45, R48, R100	10k	Standard thick film chip resistor	Vishay	CRCW060310K0FK
1	R12	118k	Standard thick film chip resistor	Vishay	CRCW0603118KFK
1	R13	1k	1 k/200 V/1%	TT Electronics	ASC1206-1K0FT5
1	R16	124k	Standard thick film chip resistor	Vishay	CRCW0603124KFK
1	R17	33k	Standard thick film chip resistor	Vishay	CRCW060333K0FK
1	R18	84.5k	Standard thick film chip resistor	Vishay	CRCW060384K5FK
4	R20, R21, R22, R23	62R	Standard thick film chip resistor	Vishay	CRCW121062R0FK
1	R24	3.65k	Standard thick film chip resistor	Vishay	CRCW06033K65FK
2	R25, R26	5.62k	Standard thick film chip resistor	Vishay	CRCW06035K62FK
1	R28	5.49k	Standard thick film chip resistor	Vishay	CRCW06035K49FK
1	R29	200k	Standard thick film chip resistor	Vishay	CRCW0603200KFK
3	R30, R43, R51	100k	General purpose chip resistor	Yageo	RC0603FR-07100KL
18	R31, R34, R36, R37, R41, R42, R56, R57, R59, R63, R64, R65, R73, R74, R75, R78, R79, R80	1MEG	Standard thick film chip resistor	Vishay	CRCW12061M00FK
1	R39	10k	General purpose chip resistor	Yageo	RC1206FR-0710KL
2	R40, R44	1k	Standard thick film chip resistor	Vishay	CRCW06031K00FK
1	R46	5.1k	Standard thick film chip resistor	Vishay	CRCW06035K10FK
1	R47	1MEG	Standard thick film chip resistor	Vishay	CRCW06031M00FK
2	R49, R99	47k	Standard thick film chip resistor	Vishay	CRCW060347K0FK
2	R52, R53	16k	Standard thick film chip resistor	Vishay	CRCW060316K0FK
2	R54, R55	10R	NTC thermistor for inrush current limiting	Epcos	B57237S0100M000
3	R58, R60, R61	275V	Multi-pulse handling SIOV metal oxide varistor	Epcos	B72220S0271K101
3	R62, R76, R77	4.7k	Standard thick film chip resistor	Vishay	CRCW08054K70FK
1	R68	33k	33 k/50 V/1%	ROHM Semiconductors	MCR03ERTF3302
1	R69	470k	Standard thick film chip resistor	Vishay	CRCW0603470KFK
1	R70	220R	Standard thick film chip resistor	Vishay	CRCW0805220RFK
2	R71, R72	5.1R	Standard thick film chip resistor	Vishay	CRCW12065R10FK
1	R82	4.7k	Standard thick film chip resistor	Vishay	CRCW12064K70FK
2	R83, R84	30k	Standard thick film chip resistor	Vishay	CRCW060330K0FK

Quantity	Ref. Designator	Value	Description	Manufacturer	Manufacturer P/N
2	R85, R86	680R	Standard thick film chip resistor	Vishay	CRCW0603680RFK
2	R87, R105	3k	3 k/50 V/1%	ROHM Semiconductors	MCR03EZPFX3001
3	R88, R91, R93	3.3MEG	Standard thick film chip resistor	Vishay	CRCW12063M30FK
3	R89, R92, R94	10MEG	Standard thick film chip resistor	Vishay	CRCW120610M0FK
1	R90	24k	Standard thick film chip resistor	Vishay	CRCW060324K0FK
1	R95	6.8k	General purpose chip resistor	Yageo	RC0805FR-076K8L
1	R96	20R	Standard thick film chip resistor	Vishay	CRCW120620R0FK
2	R98, R104	2.49k	Standard thick film chip resistor	Vishay	CRCW06032K49FK
1	R101	0R	Standard thick film chip resistor	Vishay	CRCW06030000Z0
2	R102, R103	1.2R	Standard thick film chip resistor	Vishay	CRCW12061R20FK
2	R106, R107	3R	3R/0.5 W/1%	Panasonic	ERJ8BQF3R0V
1	R114	0R	Standard thick film chip resistor	Vishay	CRCW08050000Z0
1	R115	250k	RES/VAR/250 k/250 mW/20%/ 100 ppm/K/-55℃ to 125℃/ 3-pin, 5.00 mm L X 4.50 mm W X 2.85 mm H Body/SMD / -	Bourns	3314G-1-254E
1	TX1	750344821-00	Transformer 10-terminal EXT, THT, horizontal, EE style bobbins, EE20	Würth Elektronik Midcom	750344821-00
1	U1	UCC28070DW	PFC controller	Texas Instruments	UCC28070DW
2	U2, U8	TL431CDBZR	Precision programmable reference	Texas Instruments	TL431CDBZR
2	U3, U4	1ED44175N01B	Gate drivers, low-side drivers	Infineon Technologies	1ED44175N01B
2	U5, U9	IFX1963TEV	1.5 A low-dropout linear voltage regulator	Infineon Technologies	IFX1963TEV
1	U6	ICE5QSAG	Quasi-resonant PWM controller	Infineon Technologies	ICE5QSAG
1	U7	SFH617A-3	Optocoupler, phototransistor output, high reliability, 5300 VRMS, 110 Â°C rated	Vishay	SFH617A-3
2	U11, U12	LM2903D	Dual differential comparators	Texas Instruments	LM2903D
5	X1, X3, X6, X7, X9	7460307	WP-BUTR Redcube Press Fit with internal thread and two-rows pin plate	Würth Elektronik	7460307
2	X2, X8	691311500102	Terminal block, 2-pins, 5.08 mm pitch, board to cable	Würth Elektronik	691311500102
4	X4, X5	3513	Through hole 3AG snap-in fuse clip	Conquer	CQ-205S
2	FAN1, FAN2	AFB0612EH-ABF00	Cooling fans	Delta	AFB0612EH-ABF00

3.4 Connector details

Table 4 Connectors

PIN	Label	Function
X1	Grid Line	AC input of PFC, connect to grid line
X3	Grid Neutral	AC input of PFC, connect to grid neutral
X6	Earth	Protective earth
X7	PFC DC output	Connect to load positive
X9	PFC Ground	Connect to load negative
X2	Auto Test	For AC input auto test
X8	Auto Test	For PFC output auto test

4 System performance

4.1 Efficiency and PFC measurements

All test conditions are based on a 25°C ambient temperature. For the efficiency test, it is important to monitor the voltage directly on the input connector X2 and output connector X8.

All efficiency and PF were carried out using the WT33E Yokogawa power meter.

Figure 16 shows the overall efficiency of EVAL-PFC5KIKWWR5SYS, including the aux supply for cooling fans at different input voltages from 180 V_{AC} to 264 V_{AC}. The efficiency curves show that the WR5 IGBT enables customers to increase the PFC switching frequencies (up to 60 kHz) while maintaining high efficiency.

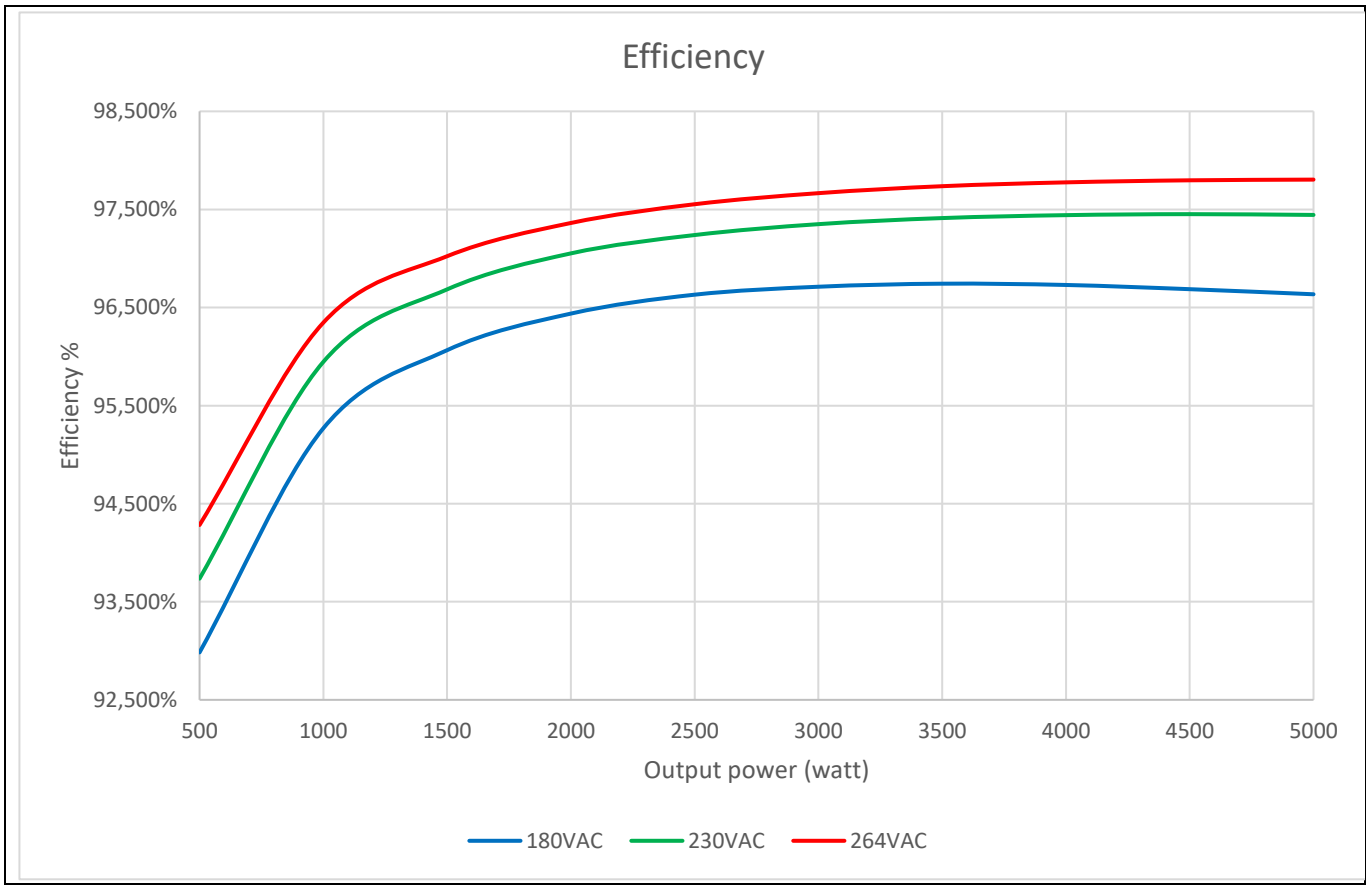

Figure 16 Efficiency of EVAL-PFC5KIKWWR5SYS

Figure 17 shows the power factor curve at different loads and different AC input voltages. The power factor is higher than 0.96 for light loads and an almost unity power factor (higher than 0.99) is achieved for loads above 30% of the rated power.

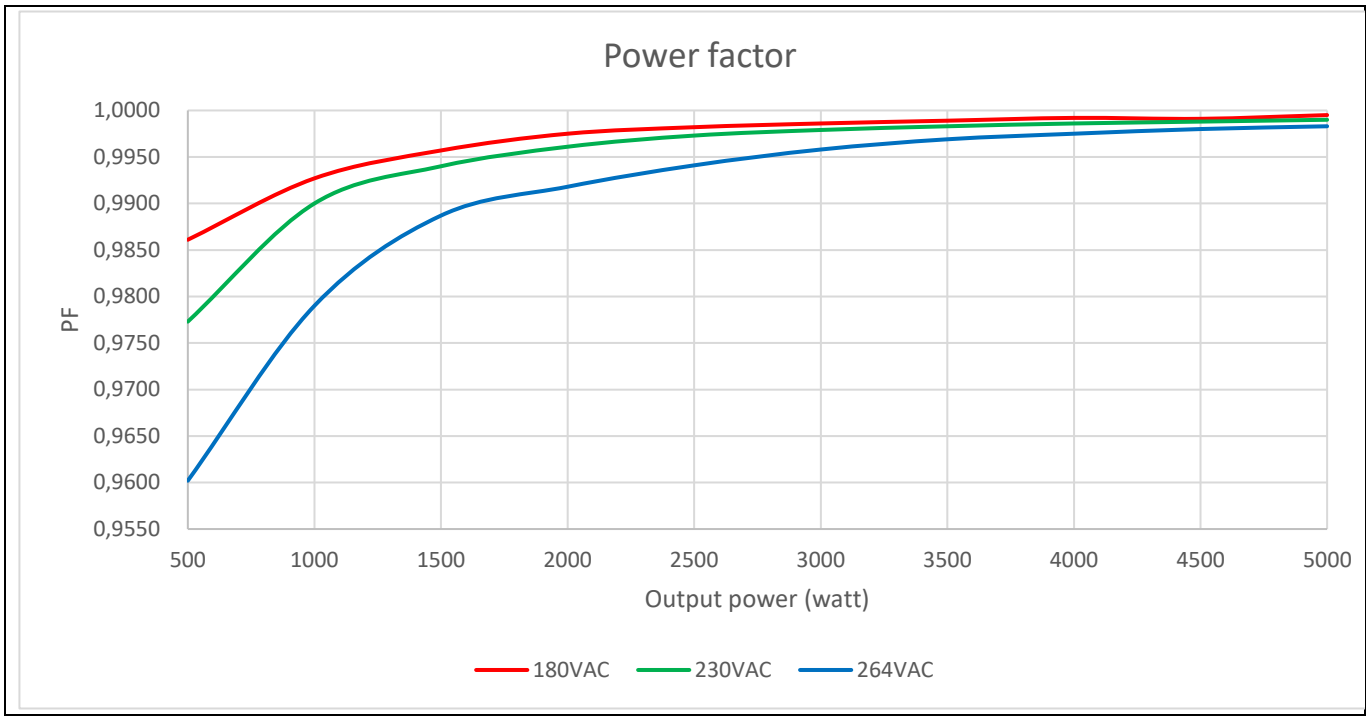

Figure 17 Power factor of EVAL-PFC5KIKWWR5SYS

4.2 Start-up behavior

After EVAL-PFC5KIKWWR5SYS is connected to a grid, the auxiliary power supply to the devices starts. During the output capacitor's pre-charging phase both channels are bypassed by D20 — an ultrafast high-voltage rectifier — and the inrush current is limited by two NTC resistors. When the output voltage reaches about 230 V_{DC}, the K1 relay turns on and the two NTC resistors are shorted, thus ensuring that the convertor works with high efficiency.

The board is designed to start in both "no load" and "full load" conditions. Figure 18 and Figure 19 show the converter's full load start-up waveforms at V_{IN} = 180 V_{AC} and V_{IN} = 264 V_{AC} respectively.

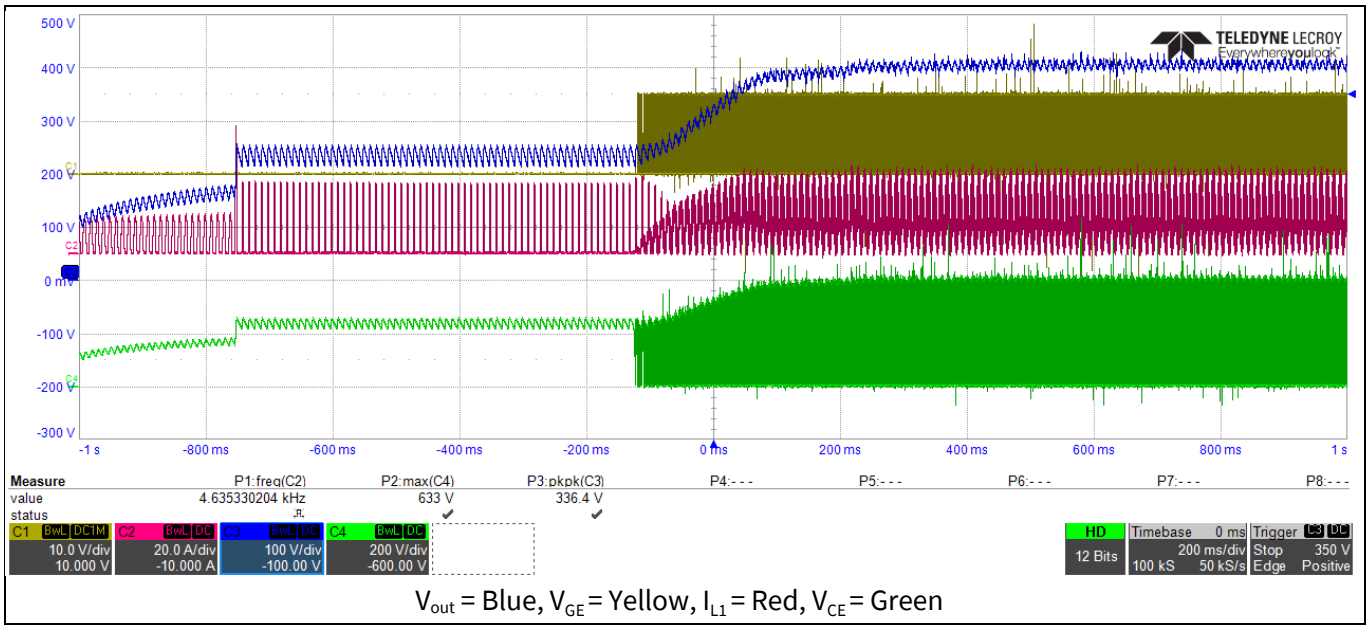

Figure 18 Full load start-up at V_{IN} = 180 V_{AC}

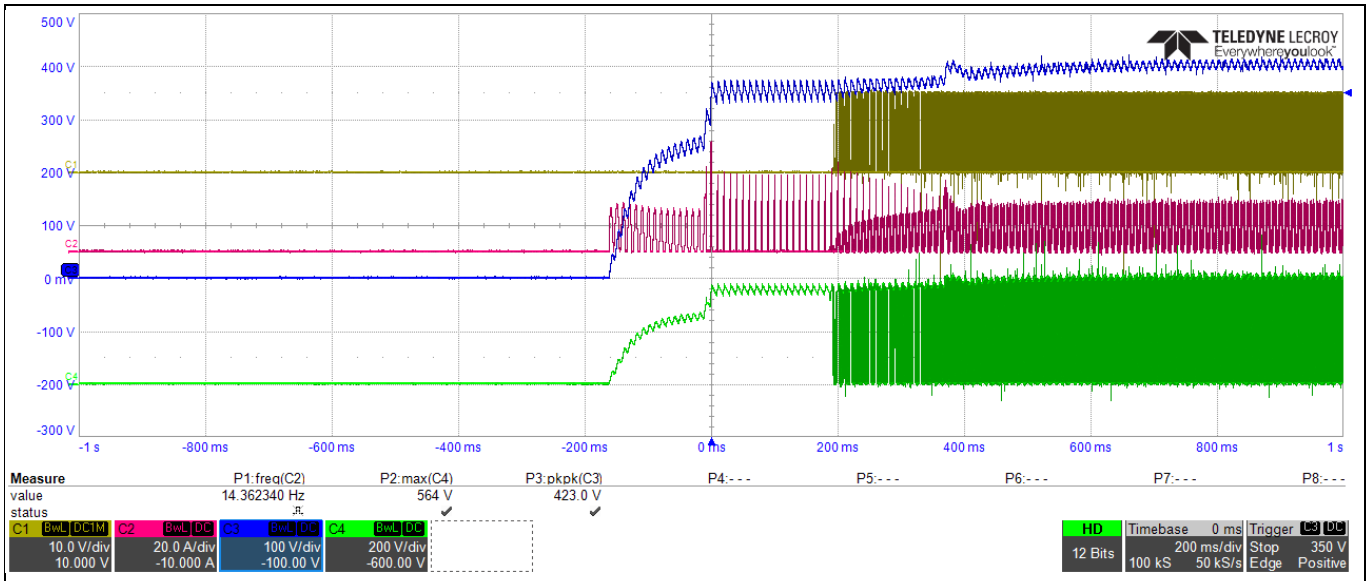

V_{out} = Blue, V_{GE} = Yellow, I_{L1} = Red, V_{CE} = Green

Figure 19 Full load start-up at V_{IN} = 264 V_{AC}

4.3 Input current and inductor current cancellation

The following images (Figure 20–25) show six waveforms of the input AC current and two inductor current waveforms of the converter at full load. The interleaving operation is highlighted and the two-channel currents are phase shifted by 180°.

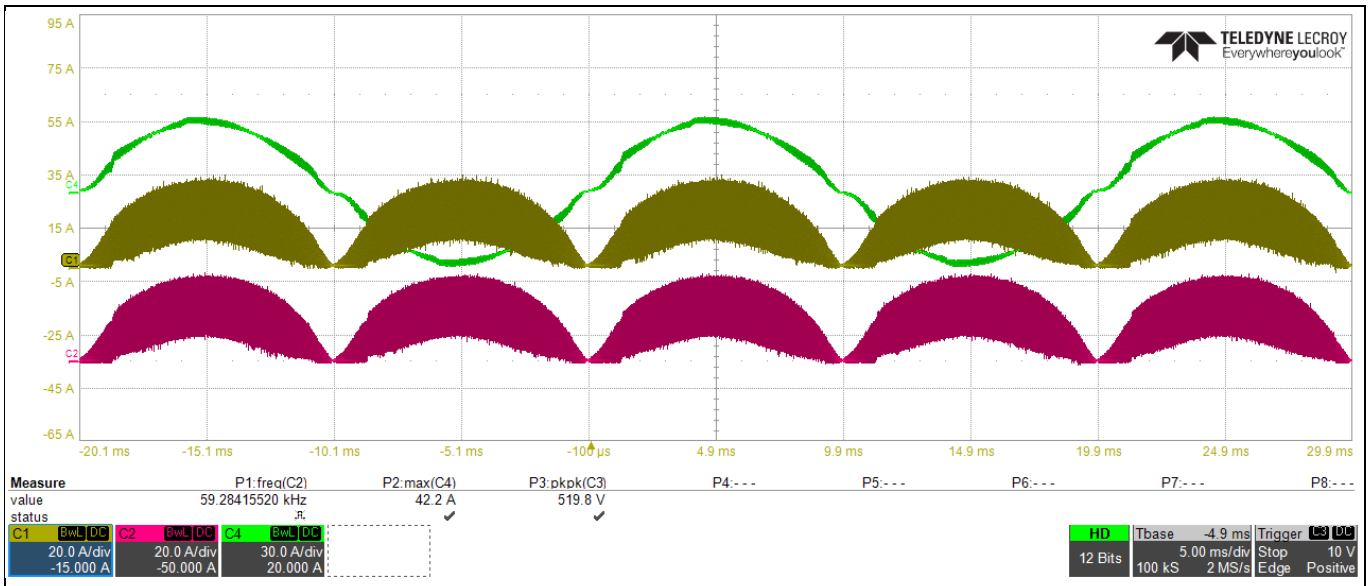

I_{IN} = Green, I_{L1} = Yellow, I_{L2} = Red

Figure 20 Interleaving operation at full load at V_{IN} = 180 V_{AC}

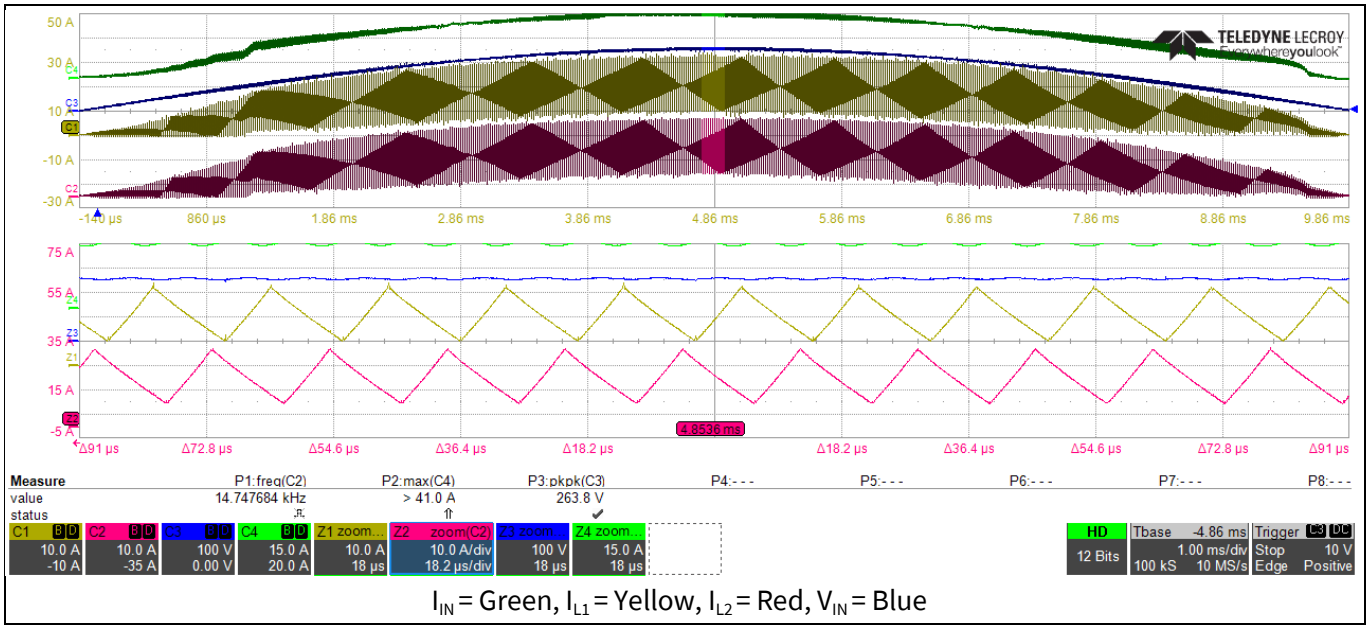

I_{IN} = Green, I_{L1} = Yellow, I_{L2} = Red, V_{IN} = Blue

Figure 21 **Detailed view of interleaving operation at full load at V_{IN} = 180 V_{AC}**

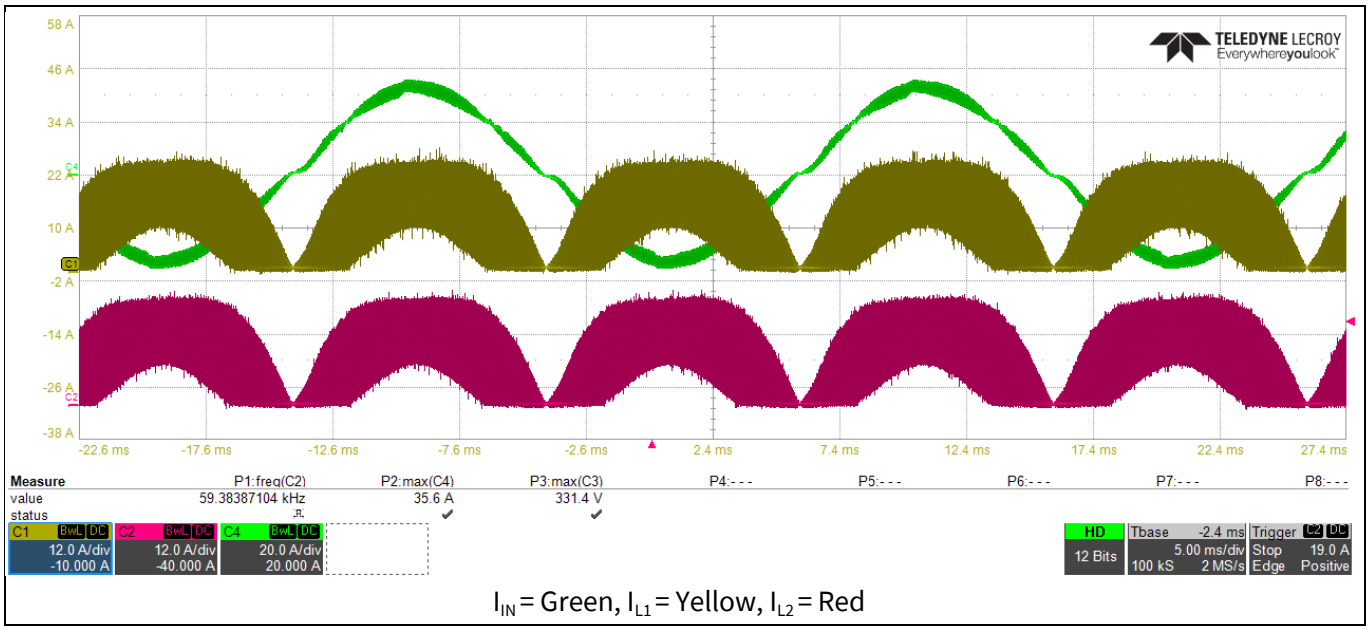

I_{IN} = Green, I_{L1} = Yellow, I_{L2} = Red

Figure 22 **Interleaving operation at full load at V_{IN} = 230 V_{AC}**

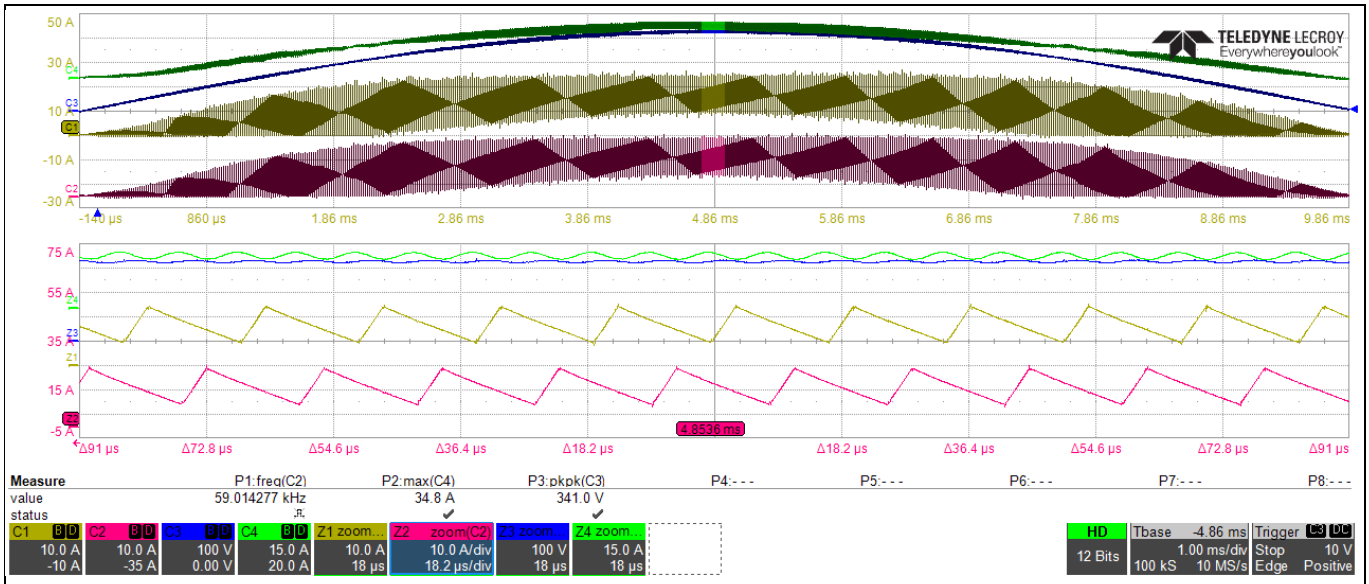

I_{IN} = Green, I_{L1} = Yellow, I_{L2} = Red, V_{IN} = Blue

Figure 23 **Detailed view of interleaving operation at full load at V_{IN} = 230 V_{AC}**

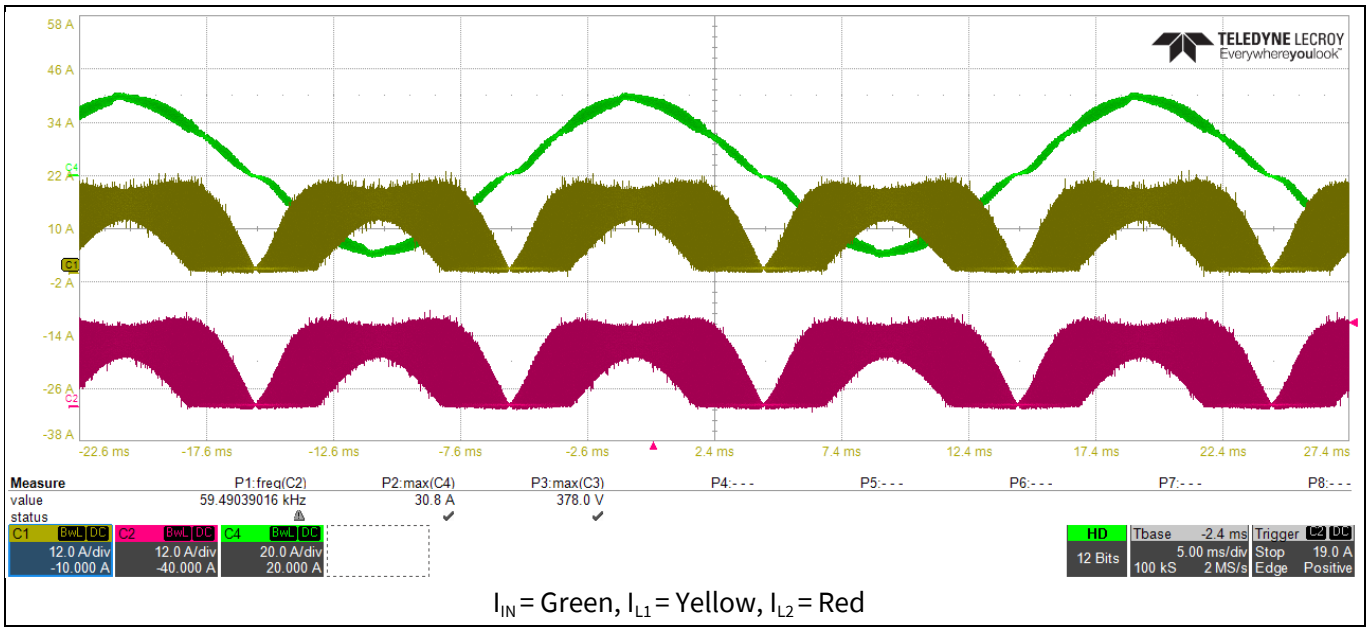

I_{IN} = Green, I_{L1} = Yellow, I_{L2} = Red

Figure 24 **Interleaving operation at full load at V_{IN} = 264 V_{AC}**

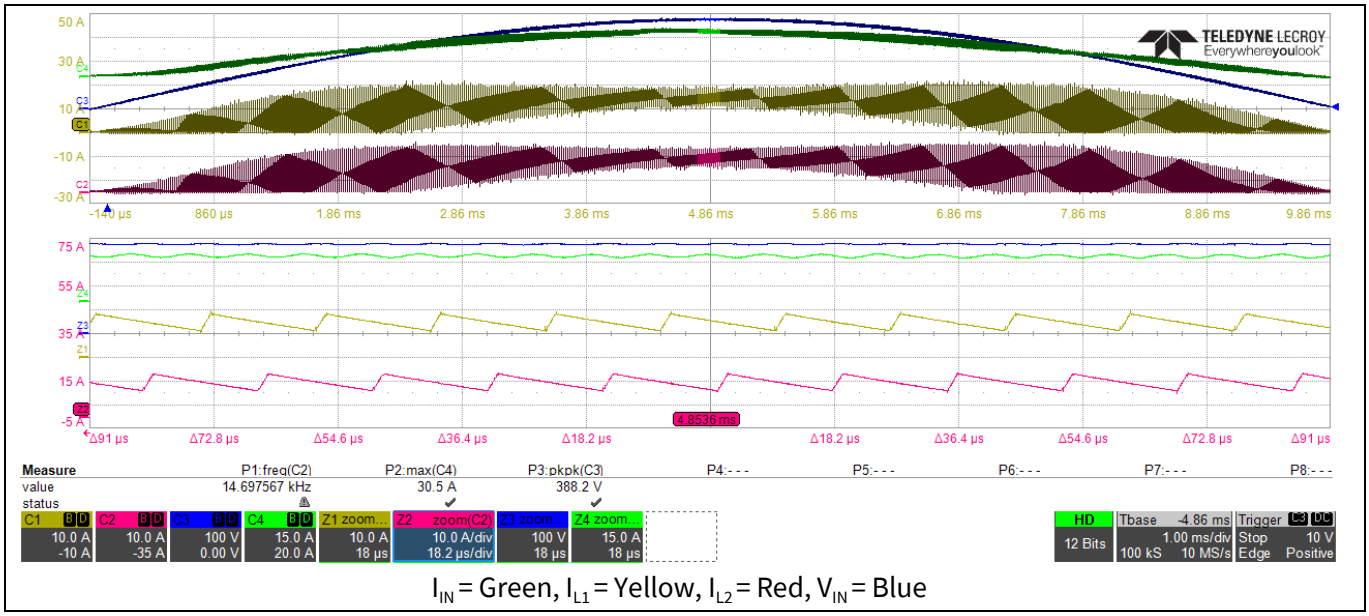

Figure 25 Detailed view of interleaving operation at full load at V_{IN} = 264 V_{AC}

4.4 Switching performance of the IGBT at steady state

This board's design aims at achieving high efficiency by using the 650 V TRENCHSTOP™ 5 WR5 IGBT — IKW40N65WR5 — as the main switch in a high-frequency, interleaved PFC application. Compared to Infineon's H3 IGBT, the WR5 IGBT has lower conduction and switching losses. The WR5 IGBT can, therefore, replace the MOSFET in applications with switching frequencies up to 100 kHz.

The following three waveforms (Figure 26–28) show switching performances of the IKW40N65WR5 with the low-side gate driver, 1ED44175. To check the driver's current capability, in this design, the turn-on gate resistance for each KW40N65WR5 is 5.1 Ω and turn-off resistance is 3 Ω. A smaller gate resistance for turn-on and turn-off decreases the turn-on and turn-off losses of the IGBT. However, during the design process, there is always a trade-off between achieving high efficiency and EMI. In high frequency applications, customers must make extra effort to reduce the noise created by high dv/dt and high di/dt.

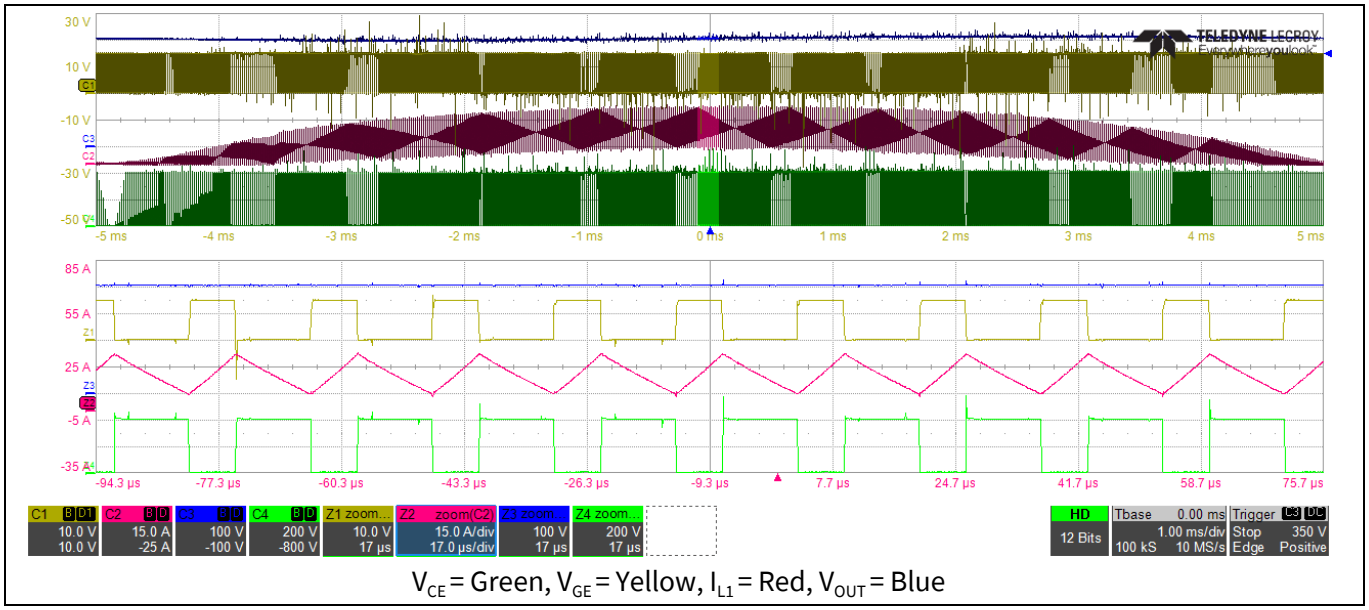

Figure 26 Switching waveforms of the IGBT at V_{IN} = 180 V_{AC} at full load

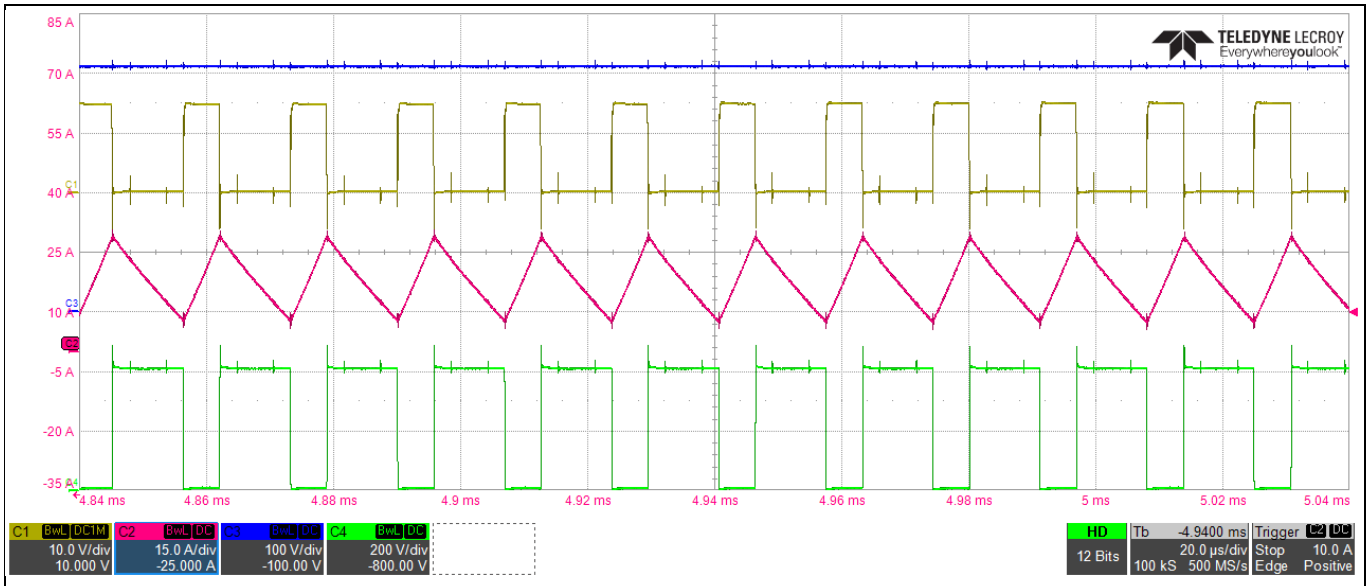

V_{CE} = Green, V_{GE} = Yellow, I_{L1} = Red, V_{OUT} = Blue

Figure 27 **Switching waveforms of IGBT at V_{IN} = 200 V_{AC} at full load (continuous current at high point of the input voltage)**

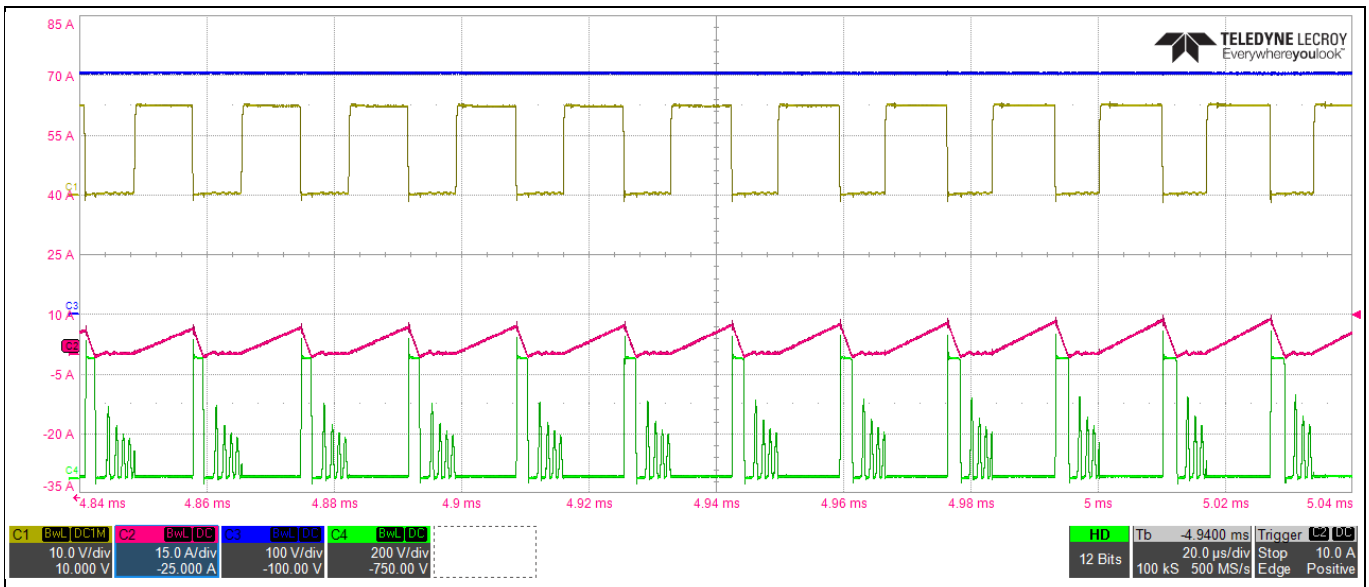

V_{CE} = Green, V_{GE} = Yellow, I_{L1} = Red, V_{OUT} = Blue

Figure 28 **Switching waveforms of IGBT at V_{IN} = 200 V_{AC} at full load (current discontinued at low point of the input voltage)**

4.5 Output ripple voltage

Due to the limitation of the board size and cost considerations, only four output filter capacitors with a total of 2720 uF are placed at the output stage . As seen in the following three waveforms (Figure 29–31), the permissible low-frequency ripple of the output voltage is lesser than 20 V at full load at different input voltages. This meets the design specifications as well.

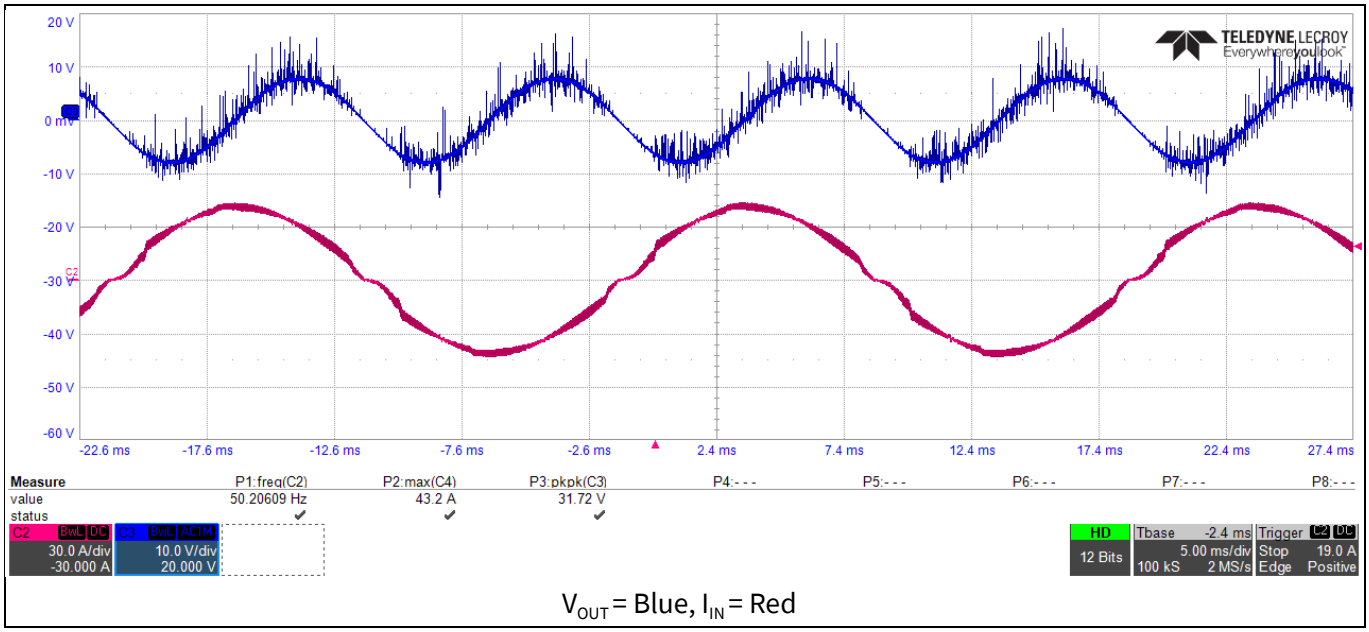

Figure 29 **PFC output ripple voltage at V_{IN} = 180 V_{AC} at full load**

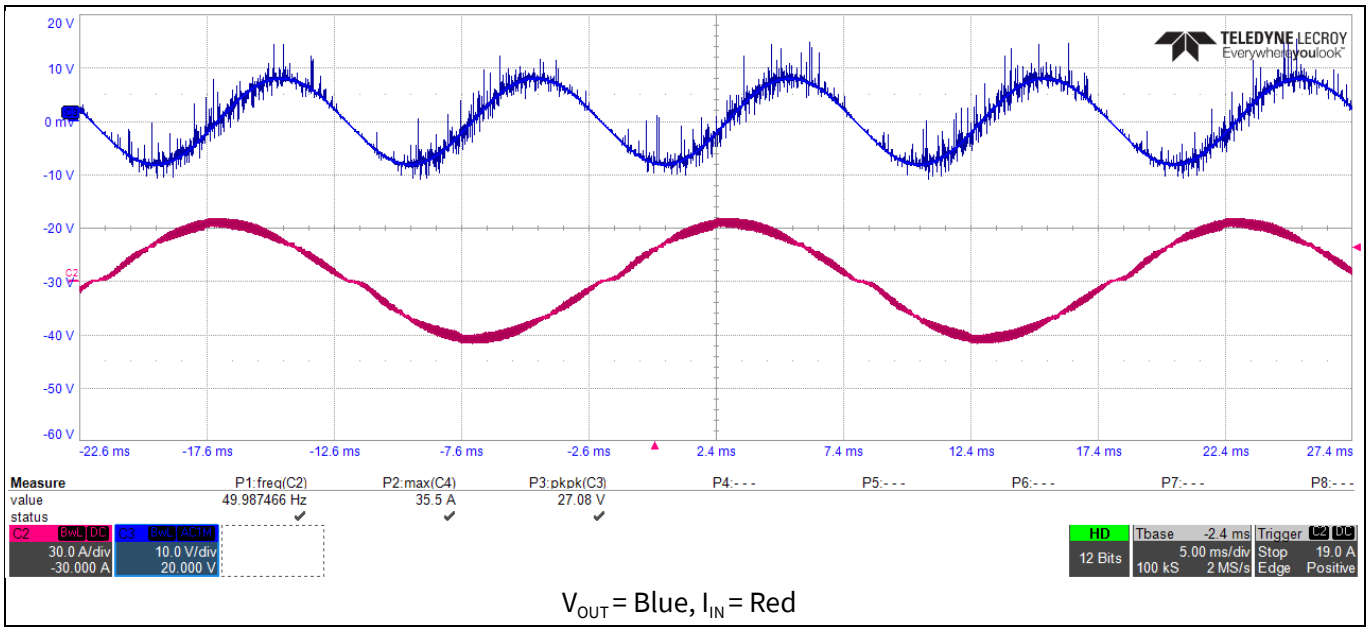

Figure 30 **PFC output ripple voltage at V_{IN} = 230 V_{AC} at full load**

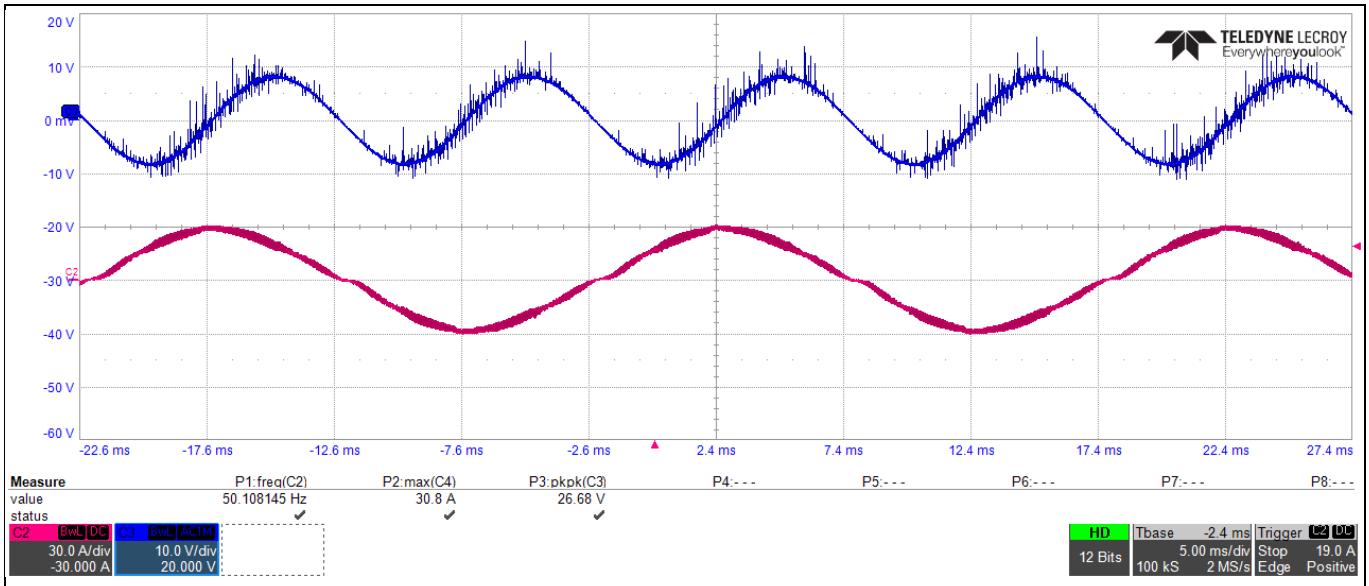

V_{OUT} = Blue, I_{IN} = Red

Figure 31 PFC output ripple voltage at V_{IN} = 264 V_{AC} at full load

4.6 Input voltage and input current

The line current shown in Figure 32–34 are nearly perfect sinusoidal waves, in phase with the line voltage. Here the output voltage is regulated at 400 V at full load.

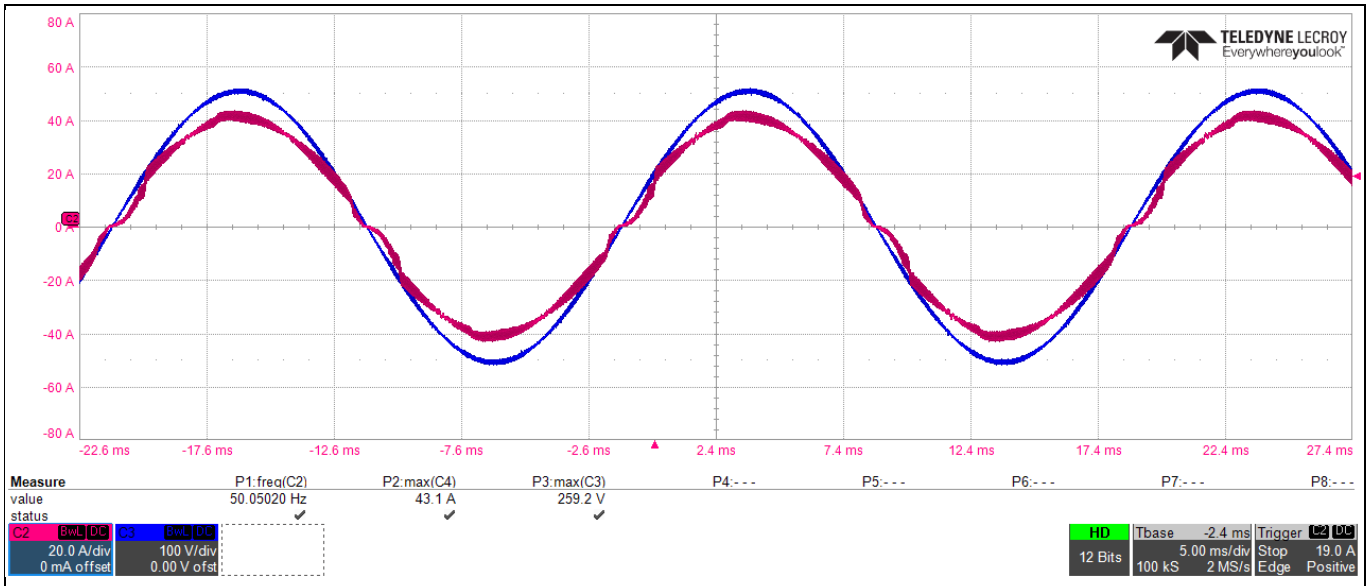

V_{IN} = Blue, I_{IN} = Red

Figure 32 PFC input voltage and input current at V_{IN} = 180 V_{AC} at full load

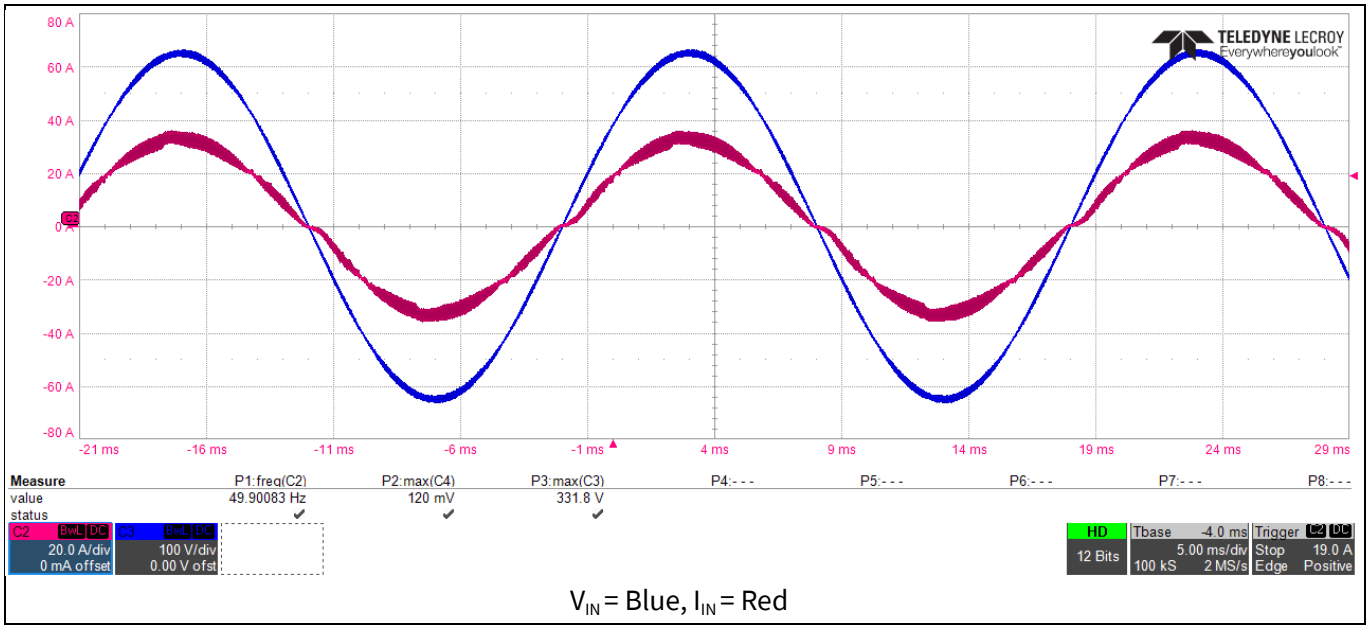

Figure 33 **PFC input voltage and input current at V_{IN} = 230 V_{AC} at full load**

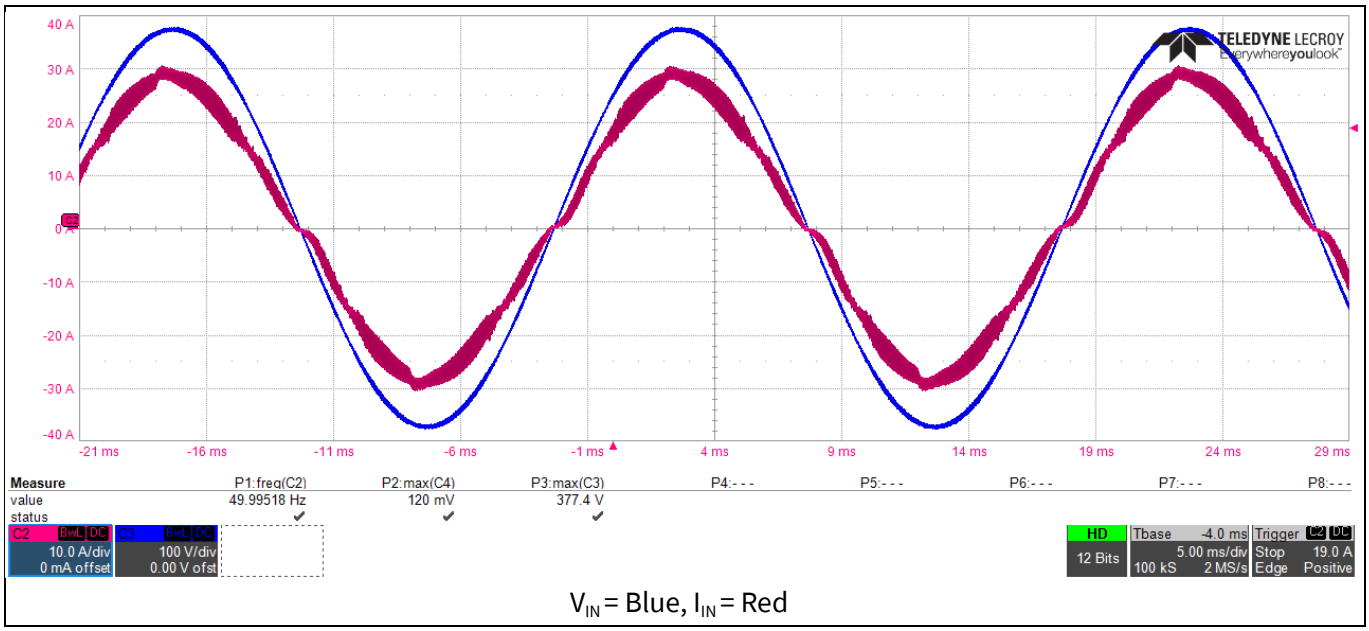

Figure 34 **PFC input voltage and input current at V_{IN} = 264 V_{AC} at full load**

4.7 Load step tests

Figure 35 and 36 show the response of the PFC converter during a load step from no load to full load with the voltage undershoot reduced to 352 V_{DC} and 360 V_{DC}, respectively. After such an abrupt load demand, the PFC controller returns to regulation in about 60 milliseconds.

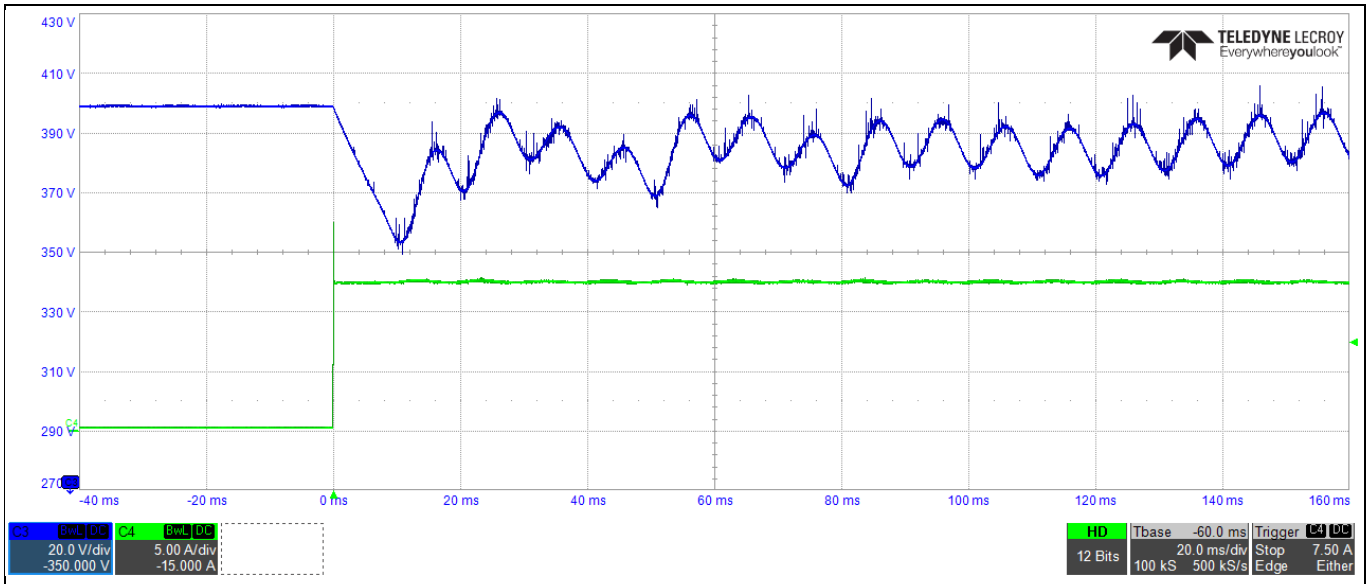

V_{OUT} = Blue, I_{OUT} = Green

Figure 35 **Load step: 0% → 100% at V_{IN} = 180 V_{AC}**

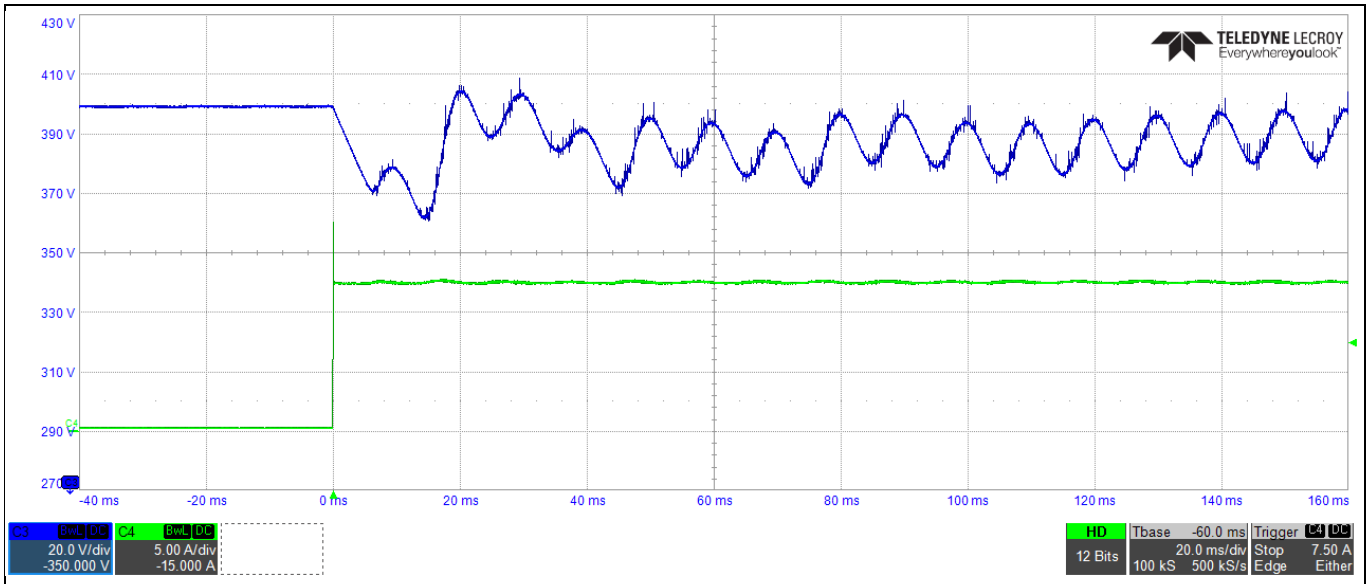

V_{OUT} = Blue, I_{OUT} = Green

Figure 36 **Load step: 0% → 100% at V_{IN} = 264 V_{AC}**

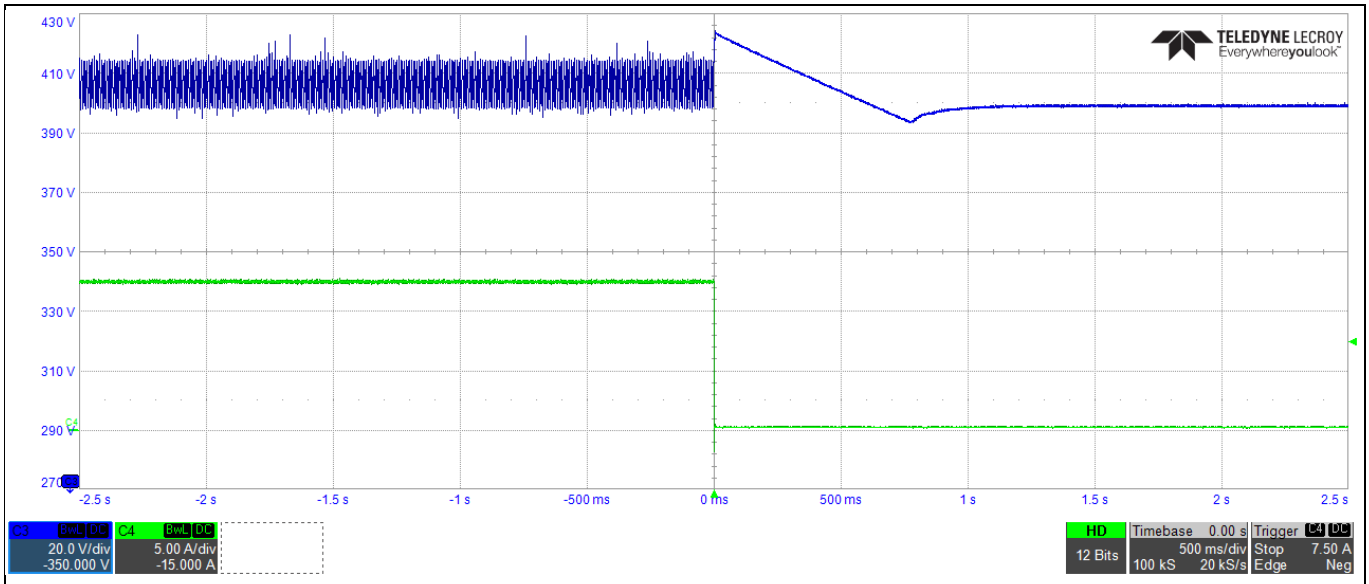

V_{OUT} = Blue, I_{OUT} = Green

Figure 37 Load step: 100% → 0% at V_{IN} = 180 V_{AC}

Figure 37 shows the response of the voltage control loop during a load step from 100% to 0% and a voltage overshoot of up to 425 V. A similar response can be observed at V_{IN} = 230 V_{AC} and V_{IN} = 264 V_{AC}.

4.8 Thermal measurements

The EVAL-PFC5KIKWWR5SYS board is provided with an enclosure. The thermal concept implemented in it includes two low-power fans attached to two heat sinks in which the power semiconductors dissipate their generated losses.

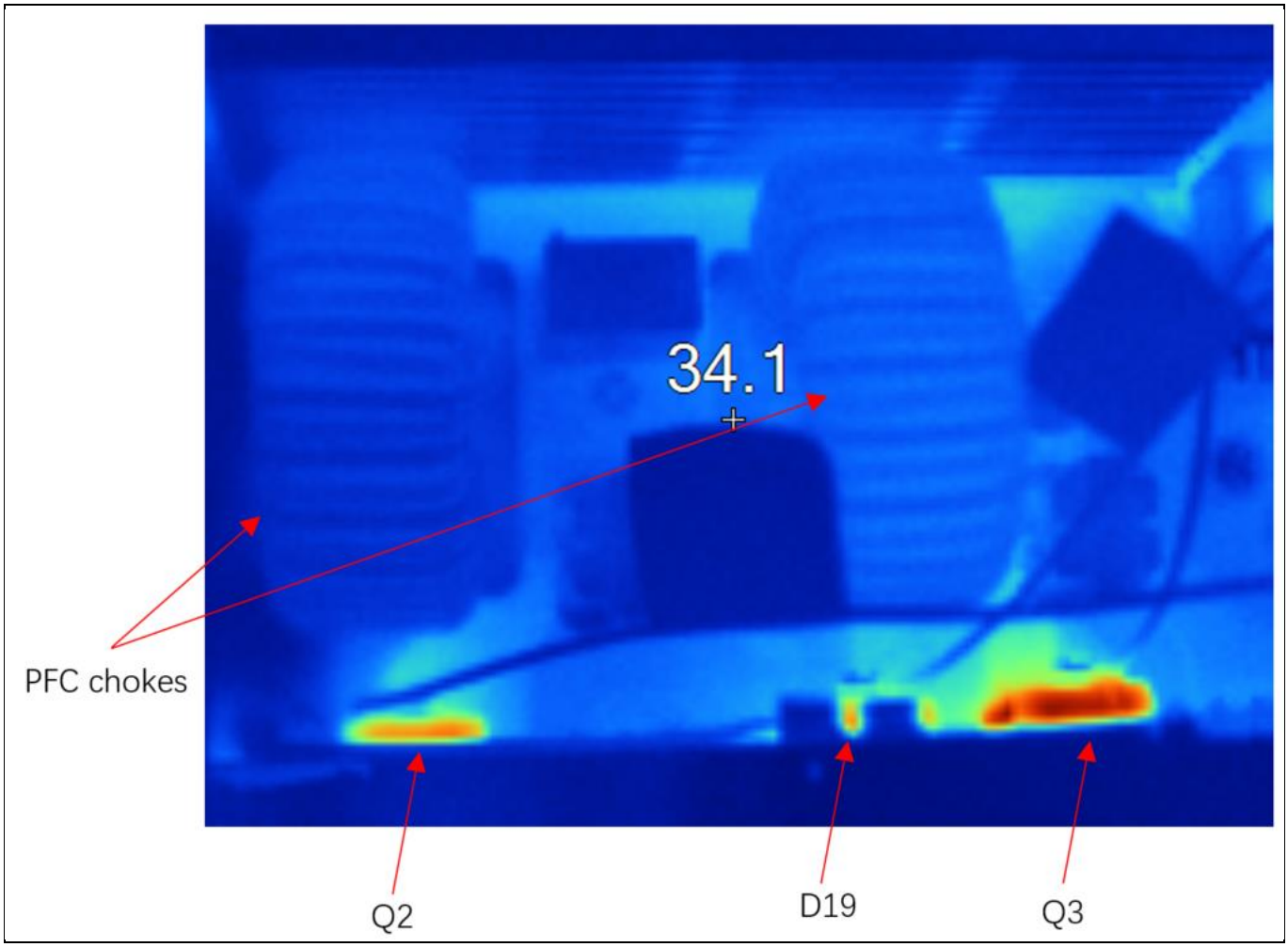

Figure 38 **Thermal capture at room temperature at nominal input (180 V) and full load conditions for the PFC operation**

Figure 38 shows that the PFC chokes are not the hotspot on the board. This is because of the two power fans in an enclosed environment. The WR5 IGBT (Q3) is the hottest power device on this board because it is far from the cooling fans. Table 5 lists the temperature data collected by Keysight 34970A with thermal couples. The highest temperature of the IGBT is 84.2°C at full load when the input voltage is 180 V_{AC}. Fortunately, in floor-standing air-conditioner applications, the IGBT's output power is de-rated to a low-input voltage; and as evident from the temperature data at half load when the input voltage is 180 V_{AC}, its highest temperature is only 45.9°C.

Table 5 **Temperature of power semiconductors**

Devices	V_{IN} = 230 V_{AC}, full load	V_{IN} = 180 V_{AC}, full load	V_{IN} = 180 V_{AC}, half load
Q2 (IKW40N65WR5)	51.7°C	67.8°C	39.8°C
D19 (IDW60C65D1)	61.6°C	74.2°C	40.3°C
Q3 (IKW40N65WR5)	62.1°C	84.2°C	45.9°C

5 Conclusion

This user guide described the implementation of an analog-controlled, single-phase, two-channel interleaved PFC converter that operates in a continuous conduction mode. This interleaved PFC converter achieves a peak efficiency of 97.804% using an Infineon 650 V TRENCHSTOP™ 5 WR5 IGBT — IKW40N65WR5 and a rapid1 power silicon diode — IDW60C65D1.

The EVAL-PFC5KIKWWR5SYS board has been tested using a programmable AC source and an electronic load to demonstrate the key performance and behaviors during a PFC operation.

Customers can increase the switching frequency or extend the converter input voltage from 85 V_{AC} to 264 V_{AC} to decrease the size and cost of the inductors. To optimize new requirements, external parameter setting for the resistors and capacitors of the UCC28070 is also necessary.

6 References and appendices

6.1 Abbreviations and definitions

Table 6 Abbreviations

Abbreviation	Meaning
CE	Conformité Européenne
EMI	Electromagnetic interference
UL	Underwriters Laboratories
BOM	Bill of Material
QR	Quasi-resonant
PF	Power factor
POCO	A Chinese powder core manufacturer
NPH-L	A powder core material from POCO

6.2 References

[1] Texas instruments, “UCC28070 300W Interleaved PFC Pre-regulator Design Review (Rev. B)”, Application Report, SLUA479B, August 2008

[2] Infineon Technologies, “Fifth-generation QR design guide for ICE5QSAG and ICE5QRXXXXAX”, Application Report, DG_201609_PL83_026, September 2017

6.3 Additional information

For more information about the Infineon devices mentioned in this guide, click the following links:

- TRENCHSTOP™ 5 WR5 IGBT IKW40N65WR5
- Low-side gate driver 1ED44175N01B
- Rapid1 power silicon diode IDW60C65D1
- QR Flyback controller ICE5QSBG for auxiliary supply

Revision history

Document version	Date of release	Description of changes
V 1.0	05-03-2021	Initial release
V 2.0	06-12-2021	Update schematic about over temperature protection and clock sync.

Trademarks
All referenced product or service names and trademarks are the property of their respective owners.

Edition 2021-12-06

Published by

Infineon Technologies AG

81726 Munich, Germany

© 2022 Infineon Technologies AG.
All Rights Reserved.

Do you have a question about this document?

Email: erratum@infineon.com

Document reference

UG-2021-06

For further information on the product, technology, delivery terms and conditions and prices please contact your nearest Infineon Technologies office (**www.infineon.com**).

WARNINGS
Due to technical requirements products may contain dangerous substances. For information on the types in question please contact your nearest Infineon Technologies office.

Except as otherwise explicitly approved by Infineon Technologies in a written document signed by authorized representatives of Infineon Technologies, Infineon Technologies' products may not be used in any applications where a failure of the product or any consequences of the use thereof can reasonably be expected to result in personal injury.