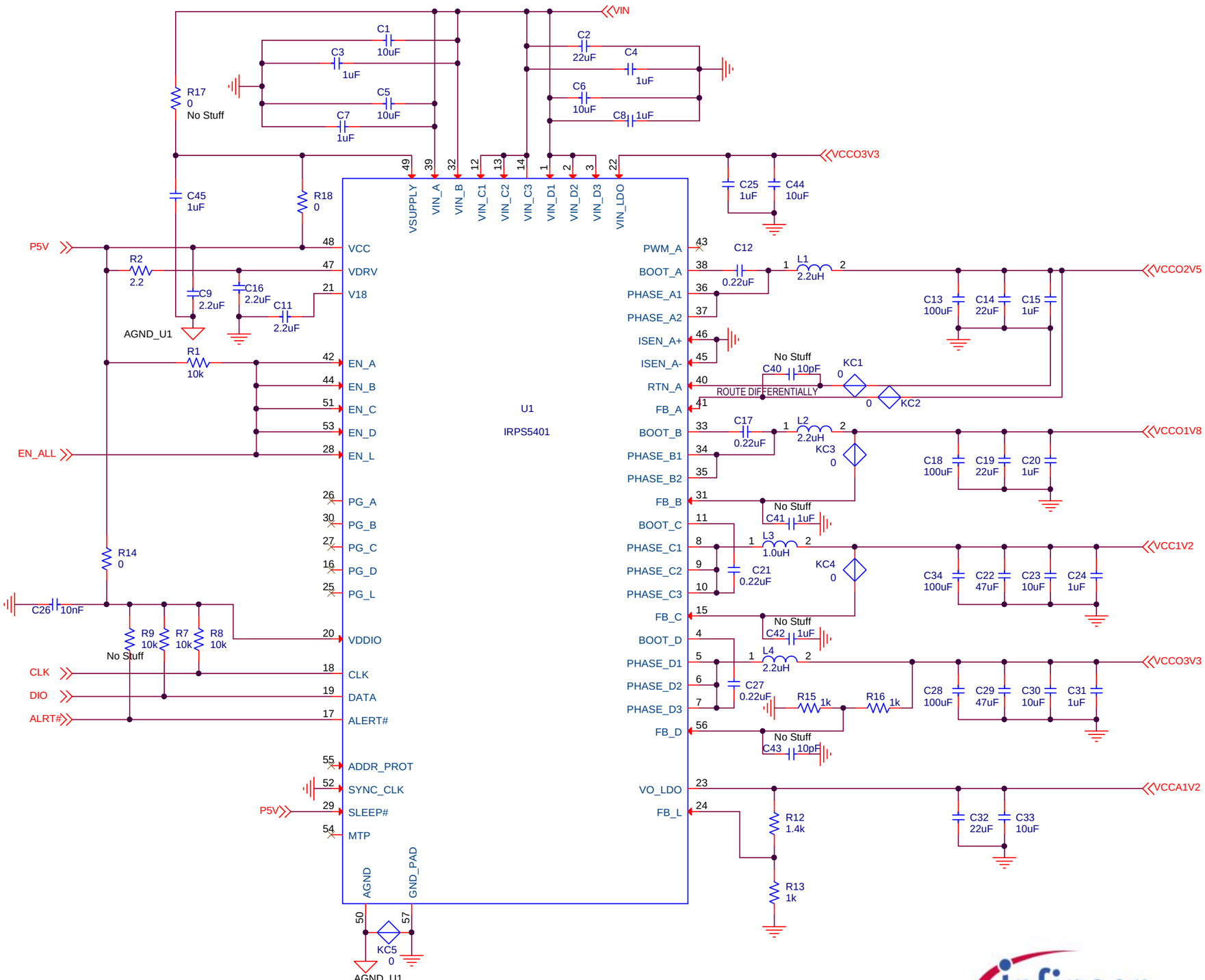

MACRO		
Title: CYCLONE LP: CL40 to CL120		
Size: B	Document Number: SCH_CYCLONE LP: CL40 to CL120	Rev: E1
Date: Thursday, May 30, 2019	Sheet 1 of 1	