请注意赛普拉斯已正式并入英飞凌科技公司。
此封面页之后的文件标注有“赛普拉斯”的文件即该产品为此公司最初开发的。请注意作为英飞凌产品组合的部分，英飞凌将继续为新的及现有客户提供该产品。

文件内容的连续性
事实是英飞凌提供如下产品作为英飞凌产品组合的部分不会带来对于此文件的任何变更。未来的变更将在恰当的时候发生，且任何变更将在历史页面记录。

订购零件编号的连续性
英飞凌继续支持现有零件编号的使用。下单时请继续使用数据表中的订购零件编号。

CYTVII-B-E-2M-176-CPU

Evaluation Board User Guide

Document Number. 002-29049 Rev. **

Cypress Semiconductor
198 Champion Court
San Jose, CA 95134-1709
www.cypress.com

Copyrights

© Cypress Semiconductor Corporation, 2019. This document is the property of Cypress Semiconductor Corporation and its subsidiaries (“Cypress”). This document, including any software or firmware included or referenced in this document (“Software”), is owned by Cypress under the intellectual property laws and treaties of the United States and other countries worldwide. Cypress reserves all rights under such laws and treaties and does not, except as specifically stated in this paragraph, grant any license under its patents, copyrights, trademarks, or other intellectual property rights. If the Software is not accompanied by a license agreement and you do not otherwise have a written agreement with Cypress governing the use of the Software, then Cypress hereby grants you a personal, non-exclusive, nontransferable license (without the right to sublicense) (1) under its copyright rights in the Software (a) for Software provided in source code form, to modify and reproduce the Software solely for use with Cypress hardware products, only internally within your organization, and (b) to distribute the Software in binary code form externally to end users (either directly or indirectly through resellers and distributors), solely for use on Cypress hardware product units, and (2) under those claims of Cypress's patents that are infringed by the Software (as provided by Cypress, unmodified) to make, use, distribute, and import the Software solely for use with Cypress hardware products. Any other use, reproduction, modification, translation, or compilation of the Software is prohibited.

TO THE EXTENT PERMITTED BY APPLICABLE LAW, CYPRESS MAKES NO WARRANTY OF ANY KIND, EXPRESS OR IMPLIED, WITH REGARD TO THIS DOCUMENT OR ANY SOFTWARE OR ACCOMPANYING HARDWARE, INCLUDING, BUT NOT LIMITED TO, THE IMPLIED WARRANTIES OF MERCHANTABILITY AND FITNESS FOR A PARTICULAR PURPOSE. No computing device can be absolutely secure. Therefore, despite security measures implemented in Cypress hardware or software products, Cypress shall have no liability arising out of any security breach, such as unauthorized access to or use of a Cypress product. CYPRESS DOES NOT REPRESENT, WARRANT, OR GUARANTEE THAT CYPRESS PRODUCTS, OR SYSTEMS CREATED USING CYPRESS PRODUCTS, WILL BE FREE FROM CORRUPTION, ATTACK, VIRUSES, INTERFERENCE, HACKING, DATA LOSS OR THEFT, OR OTHER SECURITY INTRUSION (collectively, “Security Breach”). Cypress disclaims any liability relating to any Security Breach, and you shall and hereby do release Cypress from any claim, damage, or other liability arising from any Security Breach. In addition, the products described in these materials may contain design defects or errors known as errata which may cause the product to deviate from published specifications. To the extent permitted by applicable law, Cypress reserves the right to make changes to this document without further notice. Cypress does not assume any liability arising out of the application or use of any product or circuit described in this document. Any information provided in this document, including any sample design information or programming code, is provided only for reference purposes. It is the responsibility of the user of this document to properly design, program, and test the functionality and safety of any application made of this information and any resulting product. “High-Risk Device” means any device or system whose failure could cause personal injury, death, or property damage. Examples of High-Risk Devices are weapons, nuclear installations, surgical implants, and other medical devices. “Critical Component” means any component of a High-Risk Device whose failure to perform can be reasonably expected to cause, directly or indirectly, the failure of the High-Risk Device, or to affect its safety or effectiveness. Cypress is not liable, in whole or in part, and you shall and hereby do release Cypress from any claim, damage, or other liability arising from any use of a Cypress product as a Critical Component in a High-Risk Device. You shall indemnify and hold Cypress, its directors, officers, employees, agents, affiliates, distributors, and assigns harmless from and against all claims, costs, damages, and expenses, arising out of any claim, including claims for product liability, personal injury or death, or property damage arising from any use of a Cypress product as a Critical Component in a High-Risk Device. Cypress products are not intended or authorized for use as a Critical Component in any High-Risk Device except to the limited extent that (i) Cypress's published data sheet for the product explicitly states Cypress has qualified the product for use in a specific High-Risk Device, or (ii) Cypress has given you advance written authorization to use the product as a Critical Component in the specific High-Risk Device and you have signed a separate indemnification agreement.

Cypress, the Cypress logo, Spansion, the Spansion logo, and combinations thereof, WICED, PSoC, CapSense, EZ-USB, F-RAM, and Traveo are trademarks or registered trademarks of Cypress in the United States and other countries. For a more complete list of Cypress trademarks, visit cypress.com. Other names and brands may be claimed as property of their respective owners.

Disclaimer of Schematics and Layouts: This material constitutes a reference design. CYPRESS MAKES NO WARRANTY OF ANY KIND, EXPRESS OR IMPLIED, WITH REGARD TO THIS MATERIAL, INCLUDING, BUT NOT LIMITED TO. THE IMPLIED WARRANTIES OF MERCHANTABILITY AND FITNESS FOR A PARTICULAR PURPOSE. Cypress reserves the right to make changes without further notice to the materials described herein. Cypress does not assume any liability arising out of the application or use of any product or circuit described herein. Cypress does not authorize its products for use as critical components in life-support systems where a malfunction or failure may reasonably be expected to result in significant injury to the user. The inclusion of Cypress products in a life-support systems application implies that the manufacturer assumes all risk of such use and in doing so indemnifies Cypress against all changes.

Contents

1. Introduction **4**
1.1 Precautions and Warnings....4

2. Overview **5**
2.1 Functional Overview....7

3. Operation **8**

4. Connections and Settings **10**

A. Schematics of CPU Board **17**

B. Component Assembly on CPU Board **36**

C. Schematics of Base Board **38**

D. Component Assembly on Base Board **55**

Revision History **57**

1. Introduction

This user guide provides instructions to use the CYTVII-B-E-2M-176-CPU and CYTVII-B-E-176-SO (when used with CYT2B98CAE Traveo™ II device) evaluation boards, collectively referred to as 'CPU board' in this document. This is an evaluation platform for the CYT2B98CAE Traveo II device. The board can be used standalone for basic validation or in combination with the CYTVII-B-E-BB Traveo II base board (available separately from Cypress). This document assumes that you will work with the combination (CPU board + base board), and provides guidance to use features of the evaluation platform.

1.1 Precautions and Warnings

The evaluation board must be handled by qualified personnel who are aware of the capabilities of the boards. You must ensure your own safety arising from electrical hazards and other sources. You must carefully handle the board, which is a delicate PCB, and ensure that it is not subjected to bending or other stresses.

The CPU board is shipped with a 12 V DC power adapter. This adapter can be plugged into the AC mains supply anywhere in the world and is designed to receive 100-240 V AC V @ 50/60 Hz. While powering the board, you must connect only the power adapter supplied with the evaluation board and not any other part.

2. Overview

Figure 2-1 shows the CYTVII-B-E-176-SO board with the CYT2B78CAE Traveo II device.

Figure 2-1. CYTVII-B-E-176-SO Board

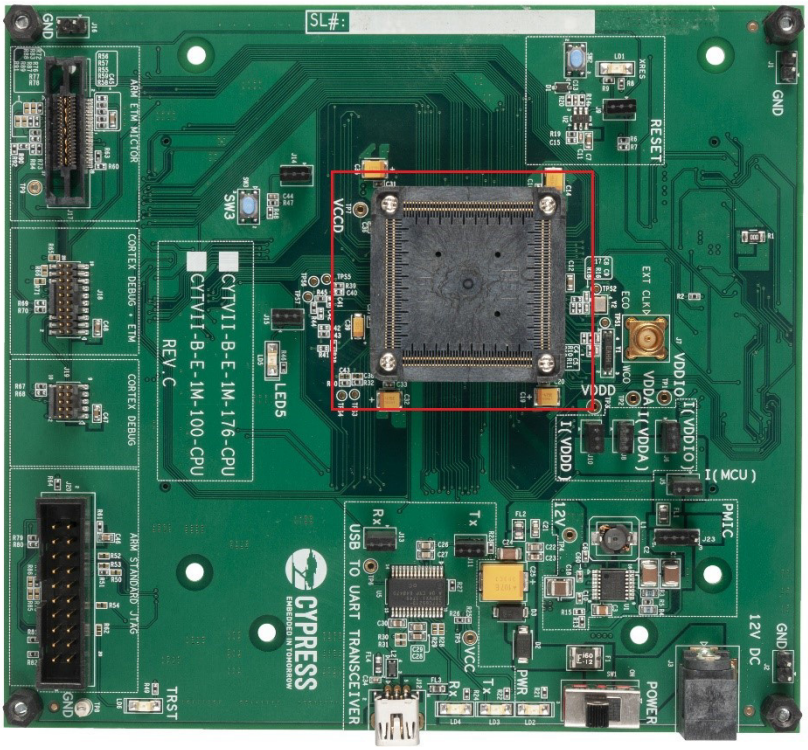

A variant of the CPU board (CYTVII-B-E-2M-176-CPU) is also available, where the Traveo II device is soldered directly onto the PCB. Functionally, the CYTVII-B-E-2M-176-CPU and CYTVII-B-E-176-SO boards are identical, except that the device can be easily replaced in the latter. Figure 2-3 shows the CYTVII-B-E-2M-176-CPU mounted on base board.

CYT2B98CAE Traveo II device is compatible with CYT2B78CAE Traveo II device, so the socketed board meant to evaluate the CYT2B78CAE Traveo II devices can also be used to evaluate the CYT2B98CAE Traveo II devices. You can insert a CYT2B98CAE Traveo II device into the IC socket (marked in red in Figure 2-1) while the evaluation board is powered OFF. Only the Device Port Pin Connections on Base board would change. The connections are listed in Table 4-1.

The CPU board is meant to be used along with a Traveo II base board (CYTVII-B-E-BB). The base board brings out all important interface connections such as CAN, LIN, SPI EEPROM, CXPI, and Flexray, and can be used in conjunction with several CPU boards of the Traveo II family. Figure 2-2 shows the base board.

Figure 2-2. Traveo II Base board (CYTVII-B-E-BB)

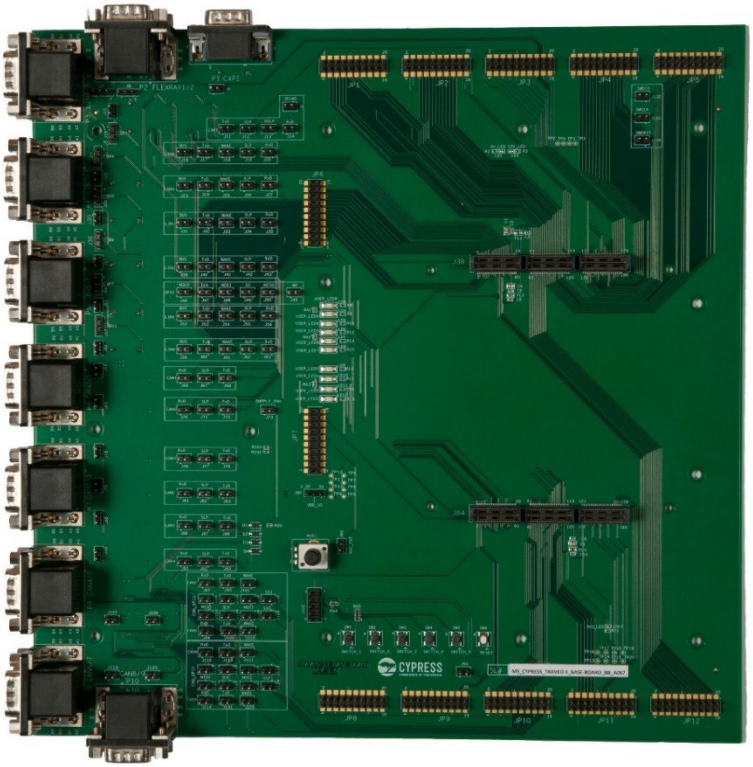

Two Samtec connectors on the CPU board and the corresponding mating connectors on the base board are used to connect signals across the two boards. When put together, the boards appear as shown in Figure 2-3.

Figure 2-3. Combination of CPU Board and TVII Base Board

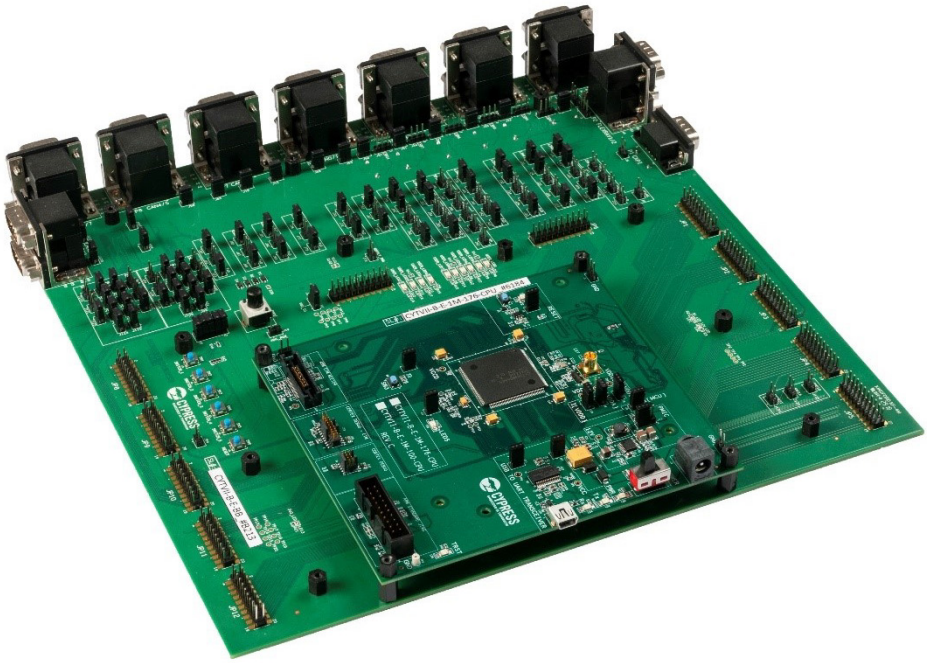

2.1 Functional Overview

The CPU board has the following features:

1. One Traveo II device, either soldered or mounted on a socket (U4).
2. PMIC to generate the 5 V and 3.3 V output depending on the Jumper J23 selection, which powers the CPU board and the base board (if connected).
3. Programming interface (JTAG-20, MiniProg3, SWD, and IDC-20, Mictor trace port) to connect several programming tools such as IAR I-jet, Green Hills GHS, MiniProg.
4. USB-UART interface for terminal logging (J12).
5. One user switch (SW3) and one user LED (LED5) for standalone operation without the base board.
6. Reset controller with manual reset switch (SW2) and voltage supervision.
7. Measurement of device current on VDDIO, VDDA, and VDDD using jumpers J6, J8, and J10 respectively.
8. Samtec connector interface (J21 and J22) for connecting to the base board CYTVII-B-E-BB.

The Traveo II base board has the following features:

1. Six CAN-FD transceivers based on TJA1057GT (Dual connectors P6, P7, P8).
2. Four CAN-FD transceivers based on TJA1145T, with SPI-based transceiver configuration (Dual connectors P9, P10).
3. Six LIN transceivers based on TJA1021T (Dual connectors (Dual connectors P3, P4, P5).
4. Two Flexray transceivers based on TJA1081TS (Dual connector P2).
5. One CXPI transceiver based on S6BT112A01 (Connector P1).
6. One SPI EEPROM 25LC320A (U9).
7. Five user switches (SW1 through SW5), 10 user LEDs (USER_LED0 through USER_LED9), and one potentiometer (POT1) for analog input.
8. Pin headers to access all I/Os of the TVII device (when a CPU board is connected to the base board).
9. Samtec connector interface (J38 and J84) for connecting to a CPU board.

3. Operation

This section describes the operation of the CPU board and the base board. It is assumed that you have connected the CPU board to the base board using the Samtec interface and inserted a Traveo II device into the IC socket (applicable to SO boards only). The following method can be used to operate the CPU board and the base board:

1. For socketed CPU board, ensure that the device is inserted into the socket. Remove the four screws on the socket using the screwdriver provided in the box and open the socket cover. If the device is not present, place one carefully using a vacuum picker or a pair of tweezers.
2. Ensure that the pin 1 of the device is near the arrow mark (near C14) as shown in Figure 3-1. You must also ensure that the angle of placing the device is such that the pins on all four sides of the LQFP package match well with the socket pins. Align the device slightly if required.

Figure 3-1. Orientation of Device when Inserted in Socket

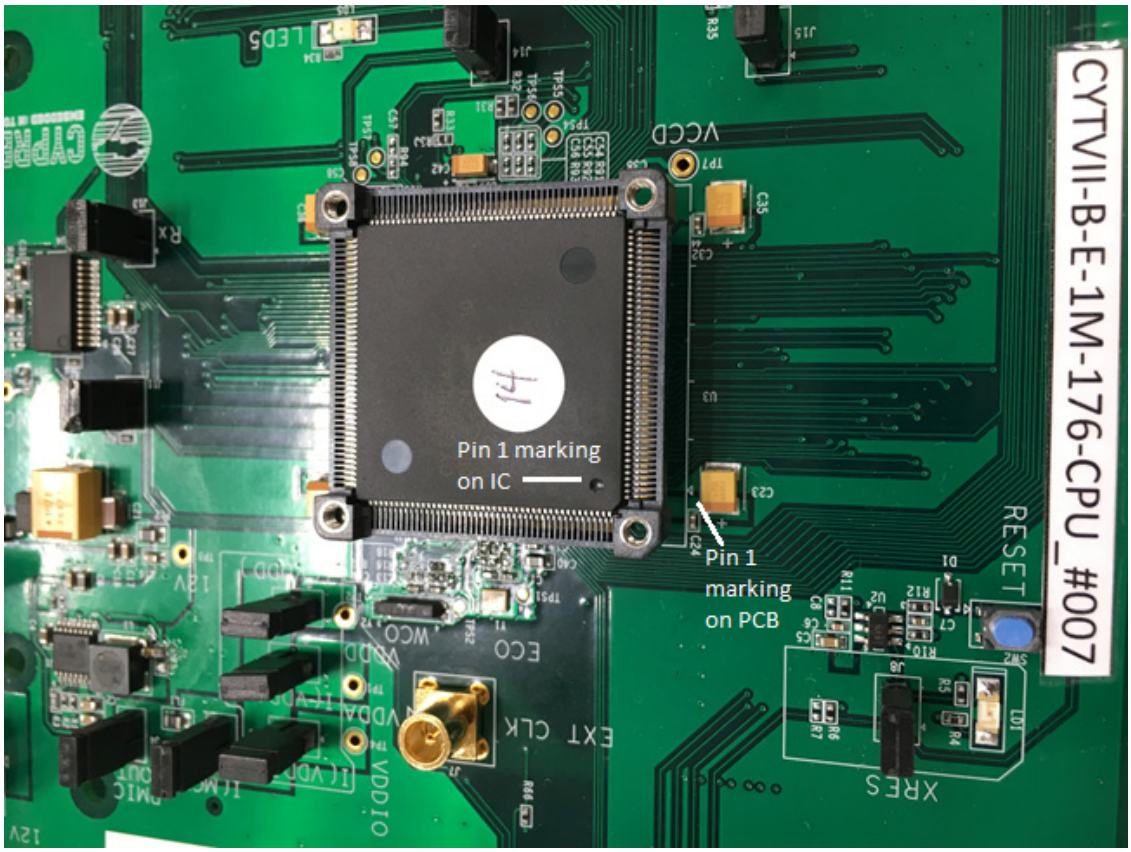

3. Put the socket cover and fix the four screws such that the socket cover tightly sits on the socket base.

4. A 12 V wall adapter board is supplied along with the CPU board. Connect the 12 V wall adapter to the barrel connector marked “12V DC” on the CPU board. Connect its plug to a mains socket using one of the four plug adapters provided in the white box (depending on the geographical location and the socket type available).
5. Ensure that jumpers J23 (default 5 V: J23_1 and J23_2), J5, J6, J8, J10 (current measurement jumpers) are inserted on the CPU board. You can select the 3.3 V power rails for CPU board by shorting J23_2 and J23_2 as per their application or hardware setup.
6. Turn ON the mains supply to the wall adapter. Turn ON the switch SW1 on the CPU board. The LED labelled PWR should light up.
7. Connect an appropriate programming tool to one of the programming interfaces (J17, J18, J19, J20). Programming tool options are:
   - GHS Trace on J20
   - IAR I-jet on J18 or J19
   - MiniProg3 on J19
8. Install the appropriate programming IDE on a PC. The programming IDE (GHS Multi, IAR EWB, CYP, and so on) should be able to detect a device (read the device ID) and to load a firmware HEX file (.srec) into the device flash successfully.

   As part of the release package, various firmware examples compiled in several programming IDEs are available. Some examples use specific transceivers on the base board.
9. To start with, use the LED blink example provided with the release package to test the functioning of the board.
10. Connect a USB-mini cable to J12 and the other end to a PC. Open Tera Term or your preferred terminal logging application and set the appropriate port and baud rate (typically 115,200 baud, 8, N, 1). Ensure that jumpers J11 and J13 are inserted on the CPU board. Some firmware examples provide data logs from the device or ask for user inputs over the terminal.

4. Connections and Settings

Ensure that the following jumpers are inserted on the base board to use each transceiver on the base board with respective firmware examples which activate each functionality of the device:

1. CAN0.0 from the device uses the CAN0 transceiver on the base board (connect jumpers J70, J71, J72)
2. CAN0.1 from the device uses the CAN1 transceiver on the base board (connect jumpers J66, J67, J68)
3. CAN0.2 from the device uses the CAN2 transceiver on the base board (connect jumpers J81, J82, J83)
4. CAN1.0 from the device uses the CAN3 transceiver on the base board (connect jumpers J76, J77, J78)
5. CAN1.1 from the device uses the CAN4 transceiver on the base board (connect jumpers J91, J92, J93)
6. CAN1.2 from the device uses the CAN5 transceiver on the base board (connect jumpers J86, J87, J88)
7. LIN0 from the device uses the LIN0 transceiver on the base board (connect jumpers J58, J59, J60, J63)
8. LIN1 from the device uses the LIN1 transceiver on the base board (connect jumpers J51, J52, J53, J56)
9. LIN2 from the device uses the LIN2 transceiver on the base board (connect jumpers J37, J39, J40, J43)
10. LIN3 from the device uses the LIN3 transceiver on the base board (connect jumpers J30, J31, J32, J35)
11. LIN4 from the device uses the LIN4 transceiver on the base board (connect jumpers J22, J23, J24, J27)
12. LIN6 from the device uses the LIN5 transceiver on the base board (connect jumpers J10, J16, J17, J20)
13. EEPROM on the base board is enabled by connecting jumpers J47, J48, J49.
14. The user switch functionality is enabled by connecting jumper J102.
15. The potentiometer functionality is enabled by connecting jumper J89.

In addition, power is supplied to the base board by connecting jumper J80 in the '5V' position and must always be connected. Once a specific functionality is chosen by connecting the jumpers listed above, ensure that the appropriate firmware is loaded onto the device. Incorrect firmware can result in port pins being configured incorrectly leading to bus contention and damage to hardware. For example, if you connect jumpers related to CAN0.0, you must ensure that firmware configures the related ports as CAN pins. Contact Cypress technical support for firmware examples.

Apart from these interface transceivers that can be used for specific functions, all pins of the device are also accessible on the base board using pin headers JP1 through JP12.

The device port pins are connected to pin headers on the base board as listed in Table 4-1.

Table 4-1. Device Port Pin Connections on Base Board

Port Pin	Pin Function	Access Pin on Base Board
P0.0	PWM_18/PWM_22_N/TC_18_TR0/TC_22_TR1/SCB0_RX/SCB7_SDA/SCB0_MISO/ LIN1_RX	JP6.15
P0.1	PWM_17/PWM_18_N/TC_17_TR0/TC_18_TR1/SCB0_TX/SCB7_SCL/SCB0_MOSI/ LIN1_TX	JP6.14
P0.2	PWM_14/PWM_17_N/TC_14_TR0/TC_17_TR1/SCB0_RTS/SCB0_SCL/SCB0_CLK/ LIN1_EN/CAN0_1_TX	JP6.9
P0.3	PWM_13/PWM_14_N/TC_13_TR0/TC_14_TR1/SCB0_CTS/SCB0_SDA/SCB0_SEL0/ CAN0_1_RX	JP6.8
P1.0	PWM_12/PWM_13_N/TC_12_TR0/TC_13_TR1/PWM_H_4/SCB0_SCL/SCB0_MISO	JP8.4
P1.1	PWM_11/PWM_12_N/TC_11_TR0/TC_12_TR1/PWM_H_5/SCB0_SDA/SCB0_MOSI	JP8.3
P1.2	PWM_10/PWM_11_N/TC_10_TR0/TC_11_TR1/PWM_H_6/SCB0_CLK/TRIG_IN[0]	JP8.6
P1.3	PWM_8/PWM_10_N/TC_8_TR0/TC_10_TR1/PWM_H_7/SCB0_SEL0/TRIG_IN[1]	JP8.5
P10.0	PWM_28/PWM_27_N/TC_28_TR0/TC_27_TR1/SCB4_RX/SCB4_MISO/TRIG_IN[18]	JP9.16
P10.1	PWM_29/PWM_28_N/TC_29_TR0/TC_28_TR1/SCB4_TX/SCB4_SDA/SCB4_MOSI/ TRIG_IN[19]	JP9.15
P10.2	PWM_30/PWM_29_N/TC_30_TR0/TC_29_TR1/SCB4_RTS/SCB4_SCL/SCB4_CLK/ LIN8_RX	JP6.13
P10.3	PWM_31/PWM_30_N/TC_31_TR0/TC_30_TR1/SCB4_CTS/SCB4_SEL0/LIN8_TX	JP6.16
P10.4	PWM_32/PWM_31_N/TC_32_TR0/TC_31_TR1/SCB4_SEL1/LIN8_EN/ADC[1]_0	JP6.17
P10.5	PWM_33/PWM_32_N/TC_33_TR0/TC_32_TR1/SCB4_SEL2/CXPI0_RX/ADC[1]_1	JP1.7
P10.6	PWM_34/PWM_33_N/TC_34_TR0/TC_33_TR1/CXPI0_TX/ADC[1]_2	JP1.8
P10.7	PWM_35/PWM_34_N/TC_35_TR0/TC_34_TR1/CXPI0_EN/ADC[1]_3	JP1.13
P11.0	ADC[0]_M	JP9.6
P11.1	ADC[1]_M	JP9.5
P11.2	ADC[2]_M	JP9.8
P12.0	PWM_36/PWM_35_N/TC_36_TR0/TC_35_TR1/CAN0_2_TX/TRIG_IN[20]/ADC[1]_4	JP10.8
P12.1	PWM_37/PWM_36_N/TC_37_TR0/TC_36_TR1/LIN6_EN/CAN0_2_RX/TRIG_IN[21]/ ADC[1]_5	JP10.7
P12.2	PWM_38/PWM_37_N/TC_38_TR0/TC_37_TR1/EXT_MUX[1]_EN/LIN6_RX/ADC[1]_6	JP1.9
P12.3	PWM_39/PWM_38_N/TC_39_TR0/TC_38_TR1/EXT_MUX[1]_0/LIN6_TX/ADC[1]_7	JP1.10
P12.4	PWM_40/PWM_39_N/TC_40_TR0/TC_39_TR1/EXT_MUX[1]_1/ADC[1]_8	JP10.13
P12.5	PWM_41/PWM_40_N/TC_41_TR0/TC_40_TR1/EXT_MUX[1]_2/ADC[1]_9	JP1.14
P12.6	PWM_42/PWM_41_N/TC_42_TR0/TC_41_TR1/ADC[1]_10	JP2.18
P12.7	PWM_43/PWM_42_N/TC_43_TR0/TC_42_TR1/ADC[1]_11	JP2.17
P13.0	PWM_M_8/PWM_43_N/TC_M_8_TR0/TC_43_TR1/EXT_MUX[2]_0/SCB3_RX/ SCB3_MISO/LIN3_RX/CXPI1_RX/ADC[1]_12	JP10.4
P13.1	PWM_44/PWM_M_8_N/TC_44_TR0/TC_M_8_TR1/EXT_MUX[2]_1/SCB3_TX/ SCB3_SDA/SCB3_MOSI/LIN3_TX/CXPI1_TX/ADC[1]_13	JP10.3

Table 4-1. Device Port Pin Connections on Base Board *(continued)*

Port Pin	Pin Function	Access Pin on Base Board
P13.2	PWM_M_9/PWM_44_N/TC_M_9_TR0/TC_44_TR1/EXT_MUX[2]_2/SCB3_RTS/ SCB3_SCL/SCB3_CLK/LIN3_EN/CXPI1_EN/ADC[1]_14	JP10.16
P13.3	PWM_45/PWM_M_9_N/TC_45_TR0/TC_M_9_TR1/EXT_MUX[2]_EN/SCB3_CTS/ SCB3_SEL0/ADC[1]_15	JP1.5
P13.4	PWM_M_10/PWM_45_N/TC_M_10_TR0/TC_45_TR1/PWM_H_4/SCB3_SEL1/ LIN8_RX/ADC[1]_16	JP6.4
P13.5	PWM_46/PWM_M_10_N/TC_46_TR0/TC_M_10_TR1/PWM_H_4_N/SCB3_SEL2/ LIN8_TX/CXPI2_RX/ADC[1]_17	JP2.7
P13.6	PWM_M_11/PWM_46_N/TC_M_11_TR0/TC_46_TR1/PWM_H_5/SCB3_SEL3/ LIN8_EN/CXPI2_TX/TRIG_IN[22]/ADC[1]_18	JP2.11
P13.7	PWM_47/PWM_M_11_N/TC_47_TR0/TC_M_11_TR1/PWM_H_5_N/CXPI2_EN/ TRIG_IN[23]/ADC[1]_19	JP2.15
P14.0	PWM_48/PWM_47_N/TC_48_TR0/TC_47_TR1/PWM_H_6/SCB2_RX/SCB2_MISO/ CAN1_0_TX/ADC[1]_20	JP3.12
P14.1	PWM_49/PWM_48_N/TC_49_TR0/TC_48_TR1/PWM_H_6_N/SCB2_TX/SCB2_SDA/ SCB2_MOSI/CAN1_0_RX/ADC[1]_21	JP3.14
P14.2	PWM_50/PWM_49_N/TC_50_TR0/TC_49_TR1/PWM_H_7/SCB2_RTS/SCB2_SCL/ SCB2_CLK/LIN6_RX/ADC[1]_22	JP1.11
P14.3	PWM_51/PWM_50_N/TC_51_TR0/TC_50_TR1/PWM_H_7_N/SCB2_CTS/SCB2_SEL0/ LIN6_TX/ADC[1]_23	JP7.8
P14.4	PWM_52/PWM_51_N/TC_52_TR0/TC_51_TR1/TC_H_4_TR0/SCB2_SEL1/LIN6_EN/ ADC[1]_24	JP7.12
P14.5	PWM_53/PWM_52_N/TC_53_TR0/TC_52_TR1/TC_H_4_TR1/SCB2_SEL2/CXPI2_RX/ ADC[1]_25	JP7.16
P14.6	PWM_54/PWM_53_N/TC_54_TR0/TC_53_TR1/TC_H_5_TR0/CXPI2_TX/TRIG_IN[24]/ ADC[1]_26	JP7.17
P14.7	PWM_55/PWM_54_N/TC_55_TR0/TC_54_TR1/TC_H_5_TR1/CXPI2_EN/TRIG_IN[25]/ ADC[1]_27	JP3.3
P15.0	PWM_56/PWM_55_N/TC_56_TR0/TC_55_TR1/TC_H_6_TR0/CAN1_3_TX/CXPI1_RX/ ADC[1]_28	JP3.5
P15.1	PWM_57/PWM_56_N/TC_57_TR0/TC_56_TR1/TC_H_6_TR1/CAN1_3_RX/CXPI1_TX/ ADC[1]_29	JP3.7
P15.2	PWM_58/PWM_57_N/TC_58_TR0/TC_57_TR1/TC_H_7_TR0/CXPI1_EN/ADC[1]_30	JP3.9
P15.3	PWM_59/PWM_58_N/TC_59_TR0/TC_58_TR1/TC_H_7_TR1/ADC[1]_31	JP3.11
P16.0	PWM_60/PWM_59_N/TC_60_TR0/TC_59_TR1/PWM_H_0/LIN11_RX	JP3.13
P16.1	PWM_61/PWM_60_N/TC_61_TR0/TC_60_TR1/PWM_H_0_N/LIN11_TX	JP3.15
P16.2	PWM_62/PWM_61_N/TC_62_TR0/TC_61_TR1/PWM_H_1/LIN11_EN	JP3.17
P16.3	PWM_62/PWM_62_N/TC_62_TR0/TC_62_TR1/PWM_H_1_N	JP4.3
P17.0	PWM_61/PWM_62_N/TC_61_TR0/TC_62_TR1/CAN1_1_TX	JP11.8
P17.1	PWM_60/PWM_61_N/TC_60_TR0/TC_61_TR1/PWM_H_2/SCB3_RX/SCB3_MISO/ CAN1_1_RX	JP11.7
P17.2	PWM_59/PWM_60_N/TC_59_TR0/TC_60_TR1/PWM_H_2_N/SCB3_TX/SCB3_SDA/ SCB3_MOSI	JP2.3

Table 4-1. Device Port Pin Connections on Base Board *(continued)*

Port Pin	Pin Function	Access Pin on Base Board
P17.3	PWM_58/PWM_59_N/TC_58_TR0/TC_59_TR1/PWM_H_3/SCB3_RTS/SCB3_SCL/ SCB3_CLK/TRIG_IN[26]	JP4.5
P17.4	PWM_57/PWM_58_N/TC_57_TR0/TC_58_TR1/PWM_H_3_N/SCB3_CTS/SCB3_SEL0/ TRIG_IN[27]	JP4.11
P17.5	PWM_56/PWM_57_N/TC_56_TR0/TC_57_TR1/SCB3_SEL1	JP3.10
P17.6	PWM_M_4/PWM_56_N/TC_M_4_TR0/TC_56_TR1/SCB3_SEL2	JP3.8
P17.7	PWM_M_5/PWM_M_4_N/TC_M_5_TR0/TC_M_4_TR1	JP3.6
P18.0	PWM_M_6/PWM_M_5_N/TC_M_6_TR0/TC_M_5_TR1/PWM_H_0/SCB1_RX/ SCB1_MISO/FAULT_OUT_0/ADC[2]_0	JP3.18
P18.1	PWM_M_7/PWM_M_6_N/TC_M_7_TR0/TC_M_6_TR1/PWM_H_0_N/SCB1_TX/ SCB1_SDA/SCB1_MOSI/FAULT_OUT_1/ADC[2]_1	JP3.16
P18.2	PWM_55/PWM_M_7_N/TC_55_TR0/TC_M_7_TR1/PWM_H_1/SCB1_RTS/SCB1_SCL/ SCB1_CLK/ADC[2]_2	JP9.17
P18.3	PWM_54/PWM_55_N/TC_54_TR0/TC_55_TR1/PWM_H_1_N/SCB1_CTS/SCB1_SEL0/ TRACE_CLOCK/ADC[2]_3	#NA
P18.4	PWM_53/PWM_54_N/TC_53_TR0/TC_54_TR1/PWM_H_2/SCB1_SEL1/TRACE_- DATA_0/ADC[2]_4	JP9.18
P18.5	PWM_52/PWM_53_N/TC_52_TR0/TC_53_TR1/PWM_H_2_N/SCB1_SEL2/TRACE_- DATA_1/ADC[2]_5	JP12.4
P18.6	PWM_51/PWM_52_N/TC_51_TR0/TC_52_TR1/PWM_H_3/SCB1_SEL3/CAN1_2_TX/ TRACE_DATA_2/ADC[2]_6	JP11.6
P18.7	PWM_50/PWM_51_N/TC_50_TR0/TC_51_TR1/PWM_H_3_N/CAN1_2_RX/TRACE_- DATA_3/ADC[2]_7	JP11.5
P19.0	PWM_M_3/PWM_50_N/TC_M_3_TR0/TC_50_TR1/TC_H_0_TR0/SCB2_RX/ SCB2_MISO/CAN1_3_TX/FAULT_OUT_2	JP7.9
P19.1	PWM_26/PWM_M_3_N/TC_26_TR0/TC_M_3_TR1/TC_H_0_TR1/SCB2_TX/ SCB2_SDA/SCB2_MOSI/CAN1_3_RX/CXPI3_RX/FAULT_OUT_3	JP7.13
P19.2	PWM_27/PWM_26_N/TC_27_TR0/TC_26_TR1/TC_H_1_TR0/SCB2_RTS/SCB2_SCL/ SCB2_CLK/CXPI3_TX/TRIG_IN[28]	JP6.5
P19.3	PWM_28/PWM_27_N/TC_28_TR0/TC_27_TR1/TC_H_1_TR1/SCB2_CTS/SCB2_SEL0/ CXPI3_EN/TRIG_IN[29]	JP6.10
P19.4	PWM_29/PWM_28_N/TC_29_TR0/TC_28_TR1/TC_H_2_TR0/SCB2_SEL1	JP3.4
P2.0	PWM_7/PWM_8_N/TC_7_TR0/TC_8_TR1/TC_H_4_TR0/SCB7_RX/SCB0_SEL1/ SCB7_MISO/LIN0_RX/CAN0_0_TX/SWJ_TRSTN/TRIG_IN[2]	#NA
P2.1	PWM_6/PWM_7_N/TC_6_TR0/TC_7_TR1/TC_H_5_TR0/SCB7_TX/SCB7_SDA/ SCB0_SEL2/SCB7_MOSI/LIN0_TX/CAN0_0_RX/TRIG_IN[3]	JP1.4
P2.2	PWM_5/PWM_6_N/TC_5_TR0/TC_6_TR1/TC_H_6_TR0/SCB7_RTS/SCB7_SCL/ SCB0_SEL3/SCB7_CLK/LIN0_EN/TRIG_IN[4]	JP1.6
P2.3	PWM_4/PWM_5_N/TC_4_TR0/TC_5_TR1/TC_H_7_TR0/SCB7_CTS/SCB7_SEL0/ LIN5_RX/TRIG_IN[5]	JP10.11
P2.4	PWM_3/PWM_4_N/TC_3_TR0/TC_4_TR1/PWM_H_4_N/SCB7_SEL1/LIN5_TX/ TRIG_IN[6]	JP8.8

Table 4-1. Device Port Pin Connections on Base Board *(continued)*

Port Pin	Pin Function	Access Pin on Base Board
P2.5	PWM_2/PWM_3_N/TC_2_TR0/TC_3_TR1/PWM_H_5_N/SCB7_SEL2/LIN5_EN/ TRIG_IN[7]	JP8.7
P20.0	PWM_30/PWM_29_N/TC_30_TR0/TC_29_TR1/TC_H_2_TR1/SCB2_SEL2/LIN5_RX	JP7.4
P20.1	PWM_49/PWM_30_N/TC_49_TR0/TC_30_TR1/TC_H_3_TR0/LIN5_TX	JP7.5
P20.2	PWM_48/PWM_49_N/TC_48_TR0/TC_49_TR1/TC_H_3_TR1/LIN5_EN	JP4.14
P20.3	PWM_47/PWM_48_N/TC_47_TR0/TC_48_TR1/SCB1_RX/SCB1_MISO/CAN1_2_TX	JP4.15
P20.4	PWM_46/PWM_47_N/TC_46_TR0/TC_47_TR1/SCB1_TX/SCB1_SDA/SCB1_MOSI/ CAN1_2_RX	JP5.8
P20.5	PWM_45/PWM_46_N/TC_45_TR0/TC_46_TR1/SCB1_RTS/SCB1_SCL/SCB1_CLK/ CXPI3_RX	JP5.9
P20.6	PWM_44/PWM_45_N/TC_44_TR0/TC_45_TR1/SCB1_CTS/SCB1_SEL0/CXPI3_TX	JP5.7
P20.7	PWM_43/PWM_44_N/TC_43_TR0/TC_44_TR1/SCB1_SEL1/CXPI3_EN	JP5.6
P21.0	PWM_42/PWM_43_N/TC_42_TR0/TC_43_TR1/SCB1_SEL2/WCO_IN	#N/A
P21.1	PWM_41/PWM_42_N/TC_41_TR0/TC_42_TR1/WCO_OUT	#N/A
P21.2	PWM_40/PWM_41_N/TC_40_TR0/TC_41_TR1/TRIG_DBG[1]/EXT_CLK/ECO_IN	#N/A
P21.3	PWM_39/PWM_40_N/TC_39_TR0/TC_40_TR1/ECO_OUT	#N/A
P21.4	PWM_38/PWM_39_N/TC_38_TR0/TC_39_TR1/HIBERNATE_WAKEUP[0]	JP5.5
P21.5	PWM_37/PWM_38_N/TC_37_TR0/TC_38_TR1/LIN0_RX	JP1.3
P21.6	PWM_36/PWM_37_N/TC_36_TR0/TC_37_TR1/LIN0_TX	JP5.10
P21.7	PWM_35/PWM_36_N/TC_35_TR0/TC_36_TR1/LIN0_EN/CAL_SUP_NZ/RTC_CAL	JP5.18
P22.0	PWM_34/PWM_35_N/TC_34_TR0/TC_35_TR1/SCB6_RX/SCB6_MISO/CAN1_1_TX/ TRACE_DATA_0	#NA
P22.1	PWM_33/PWM_34_N/TC_33_TR0/TC_34_TR1/SCB6_TX/SCB6_SDA/SCB6_MOSI/ CAN1_1_RX/TRACE_DATA_1	#NA
P22.2	PWM_32/PWM_33_N/TC_32_TR0/TC_33_TR1/SCB6_RTS/SCB6_SCL/SCB6_CLK/ TRACE_DATA_2	#NA
P22.3	PWM_31/PWM_32_N/TC_31_TR0/TC_32_TR1/SCB6_CTS/SCB6_SEL0/TRACE_- DATA_3	#NA
P22.4	PWM_30/PWM_31_N/TC_30_TR0/TC_31_TR1/SCB6_SEL1/TRACE_CLOCK	JP5.11
P22.5	PWM_29/PWM_30_N/TC_29_TR0/TC_30_TR1/SCB6_SEL2/LIN7_RX	JP5.12
P22.6	PWM_28/PWM_29_N/TC_28_TR0/TC_29_TR1/LIN7_TX	JP5.13
P22.7	PWM_27/PWM_28_N/TC_27_TR0/TC_28_TR1/LIN7_EN	JP5.14
P23.0	PWM_M_8/PWM_27_N/TC_M_8_TR0/TC_27_TR1/SCB7_RX/SCB7_MISO/ CAN1_0_TX/FAULT_OUT_0	JP5.15
P23.1	PWM_M_9/PWM_M_8_N/TC_M_9_TR0/TC_M_8_TR1/SCB7_TX/SCB7_SDA/SCB7_- MOSI/CAN1_0_RX/FAULT_OUT_1	JP5.16
P23.2	PWM_M_10/PWM_M_9_N/TC_M_10_TR0/TC_M_9_TR1/SCB7_RTS/SCB7_SCL/ SCB7_CLK/FAULT_OUT_2	JP5.17
P23.3	PWM_M_11/PWM_M_10_N/TC_M_11_TR0/TC_M_10_TR1/SCB7_CTS/SCB7_SEL0/ FAULT_OUT_3/TRIG_IN[30]	JP7.10

Table 4-1. Device Port Pin Connections on Base Board *(continued)*

Port Pin	Pin Function	Access Pin on Base Board
P23.4	PWM_25/PWM_M_11_N/TC_25_TR0/TC_M_11_TR1/SCB7_SEL1/TRIG_DBG[0]/ SWJ_SWO_TDO/TRIG_IN[31]	#N/A
P23.5	PWM_24/PWM_25_N/TC_24_TR0/TC_25_TR1/SCB7_SEL2/LIN9_RX/ SWJ_SWCLK_TCLK	#N/A
P23.6	PWM_23/PWM_24_N/TC_23_TR0/TC_24_TR1/LIN9_TX/SWJ_SWDIO_TMS	#N/A
P23.7	PWM_22/PWM_23_N/TC_22_TR0/TC_23_TR1/LIN9_EN/CAL_SUP_NZ/ SWJ_SWDOE_TDI/EXT_CLK/HIBERNATE_WAKEUP[1]	#N/A
P3.0	PWM_1/PWM_2_N/TC_1_TR0/TC_2_TR1/PWM_H_6_N/SCB6_RX/SCB6_MISO/ CAN0_3_TX/TRIG_DBG[0]	JP10.14
P3.1	PWM_0/PWM_1_N/TC_0_TR0/TC_1_TR1/PWM_H_7_N/SCB6_TX/SCB6_SDA/ SCB6_MOSI/CAN0_3_RX/TRIG_DBG[1]	JP11.4
P3.2	PWM_M_3/PWM_0_N/TC_M_3_TR0/TC_0_TR1/TC_H_4_TR1/SCB6_RTS/SCB6_SCL/ SCB6_CLK	JP8.10
P3.3	PWM_M_2/PWM_M_3_N/TC_M_2_TR0/TC_M_3_TR1/TC_H_5_TR1/SCB6_CTS/ SCB6_SEL0	JP8.9
P3.4	PWM_M_1/PWM_M_2_N/TC_M_1_TR0/TC_M_2_TR1/TC_H_6_TR1/SCB6_SEL1	JP8.12
P3.5	PWM_M_0/PWM_M_1_N/TC_M_0_TR0/TC_M_1_TR1/TC_H_7_TR1/SCB6_SEL2	JP8.11
P4.0	PWM_4/PWM_M_0_N/TC_4_TR0/TC_M_0_TR1/EXT_MUX[0]_0/SCB5_RX/ SCB5_MISO/LIN1_RX/TRIG_IN[10]	JP8.14
P4.1	PWM_5/PWM_4_N/TC_5_TR0/TC_4_TR1/EXT_MUX[0]_1/SCB5_TX/SCB5_SDA/ SCB5_MOSI/LIN1_TX/TRIG_IN[11]	JP8.13
P4.2	PWM_6/PWM_5_N/TC_6_TR0/TC_5_TR1/EXT_MUX[0]_2/SCB5_RTS/SCB5_SCL/ SCB5_CLK/LIN1_EN/TRIG_IN[12]	JP8.16
P4.3	PWM_7/PWM_6_N/TC_7_TR0/TC_6_TR1/EXT_MUX[0]_EN/SCB5_CTS/SCB5_SEL0/ CAN0_1_TX/TRIG_IN[13]	JP8.15
P4.4	PWM_8/PWM_7_N/TC_8_TR0/TC_7_TR1/SCB5_SEL1/CAN0_1_RX	JP8.18
P5.0	PWM_9/PWM_8_N/TC_9_TR0/TC_8_TR1/SCB5_SEL2/LIN7_RX	JP11.3
P5.1	PWM_10/PWM_9_N/TC_10_TR0/TC_9_TR1/LIN7_TX	JP10.15
P5.2	PWM_11/PWM_10_N/TC_11_TR0/TC_10_TR1/LIN7_EN	JP10.18
P5.3	PWM_12/PWM_11_N/TC_12_TR0/TC_11_TR1/LIN2_RX	JP2.5
P5.4	PWM_13/PWM_12_N/TC_13_TR0/TC_12_TR1/LIN2_TX	JP8.17
P5.5	PWM_14/PWM_13_N/TC_14_TR0/TC_13_TR1/LIN2_EN	JP10.6
P6.0	PWM_M_0/PWM_14_N/TC_M_0_TR0/TC_14_TR1/SCB4_RX/SCB4_MISO/LIN3_RX/ ADC[0]_0	JP2.9
P6.1	PWM_0/PWM_M_0_N/TC_0_TR0/TC_M_0_TR1/SCB4_TX/SCB4_SDA/SCB4_MOSI/ LIN3_TX/ADC[0]_1	JP2.10
P6.2	PWM_M_1/PWM_0_N/TC_M_1_TR0/TC_0_TR1/SCB4_RTS/SCB4_SCL/SCB4_CLK/ LIN3_EN/CAN0_2_TX/ADC[0]_2	#NA
P6.3	PWM_1/PWM_M_1_N/TC_1_TR0/TC_M_1_TR1/SCB4_CTS/SCB4_SEL0/LIN4_RX/ CAN0_2_RX/CAL_SUP_NZ/ADC[0]_3	#NA
P6.4	PWM_M_2/PWM_1_N/TC_M_2_TR0/TC_1_TR1/SCB4_SEL1/LIN4_TX/ADC[0]_4	JP2.14
P6.5	PWM_2/PWM_M_2_N/TC_2_TR0/TC_M_2_TR1/SCB4_SEL2/LIN4_EN/ADC[0]_5	JP2.16

Table 4-1. Device Port Pin Connections on Base Board *(continued)*

Port Pin	Pin Function	Access Pin on Base Board
P6.6	PWM_M_3/PWM_2_N/TC_M_3_TR0/TC_2_TR1/SCB4_SEL3/TRIG_IN[8]/ADC[0]_6	JP10.5
P6.7	PWM_3/PWM_M_3_N/TC_3_TR0/TC_M_3_TR1/TRIG_IN[9]/ADC[0]_7	JP11.11
P7.0	PWM_M_4/PWM_3_N/TC_M_4_TR0/TC_3_TR1/SCB5_RX/SCB5_MISO/LIN4_RX/ CXPI0_RX/ADC[0]_8	JP12.3
P7.1	PWM_15/PWM_M_4_N/TC_15_TR0/TC_M_4_TR1/SCB5_TX/SCB5_SDA/SCB5_- MOSI/LIN4_TX/CXPI0_TX/ADC[0]_9	JP12.6
P7.2	PWM_M_5/PWM_15_N/TC_M_5_TR0/TC_15_TR1/SCB5_RTS/SCB5_SCL/SCB5_CLK/ LIN4_EN/CXPI0_EN/ADC[0]_10	JP12.5
P7.3	PWM_16/PWM_M_5_N/TC_16_TR0/TC_M_5_TR1/SCB5_CTS/SCB5_SEL0/ADC[0]_11	JP10.10
P7.4	PWM_M_6/PWM_16_N/TC_M_6_TR0/TC_16_TR1/SCB5_SEL1/ADC[0]_12	JP10.9
P7.5	PWM_17/PWM_M_6_N/TC_17_TR0/TC_M_6_TR1/SCB5_SEL2/LIN10_RX/ADC[0]_13	JP10.12
P7.6	PWM_M_7/PWM_17_N/TC_M_7_TR0/TC_17_TR1/LIN10_TX/TRIG_IN[16]/ADC[0]_14	JP11.12
P7.7	PWM_18/PWM_M_7_N/TC_18_TR0/TC_M_7_TR1/LIN10_EN/TRIG_IN[17]/ADC[0]_15	JP11.9
P8.0	PWM_19/PWM_18_N/TC_19_TR0/TC_18_TR1/LIN2_RX/CAN0_0_TX	JP6.12
P8.1	PWM_20/PWM_19_N/TC_20_TR0/TC_19_TR1/LIN2_TX/CAN0_0_RX/TRIG_IN[14]/ ADC[0]_16	JP6.11
P8.2	PWM_21/PWM_20_N/TC_21_TR0/TC_20_TR1/LIN2_EN/TRIG_IN[15]/ADC[0]_17	JP2.8
P8.3	PWM_22/PWM_21_N/TC_22_TR0/TC_21_TR1/TRIG_DBG[0]/ADC[0]_18	JP11.10
P8.4	PWM_23/PWM_22_N/TC_23_TR0/TC_22_TR1/TRIG_DBG[1]/ADC[0]_19	JP9.9
P9.0	PWM_24/PWM_23_N/TC_24_TR0/TC_23_TR1/ADC[0]_20	JP9.12
P9.1	PWM_25/PWM_24_N/TC_25_TR0/TC_24_TR1/ADC[0]_21	JP9.11
P9.2	PWM_26/PWM_25_N/TC_26_TR0/TC_25_TR1/ADC[0]_22	JP9.14
P9.3	PWM_27/PWM_26_N/TC_27_TR0/TC_26_TR1/ADC[0]_23	JP9.13
VCCD	VCCD	#NA
VDDA	VDDA	#NA
VDDD	VDDD	#NA
VDDIO	VDDIO	#NA
VREFH	VREFH	#NA
VREFL	VREFL	#NA
VSSA	VSSA / VSSD / VSSIO/ Ground	JP1.19
XRES	XRES	#NA

A. Schematics of CPU Board

This appendix contains the schematics of TVII-B-E-2M board.

Figure A-1. Block Diagram of CPU Board

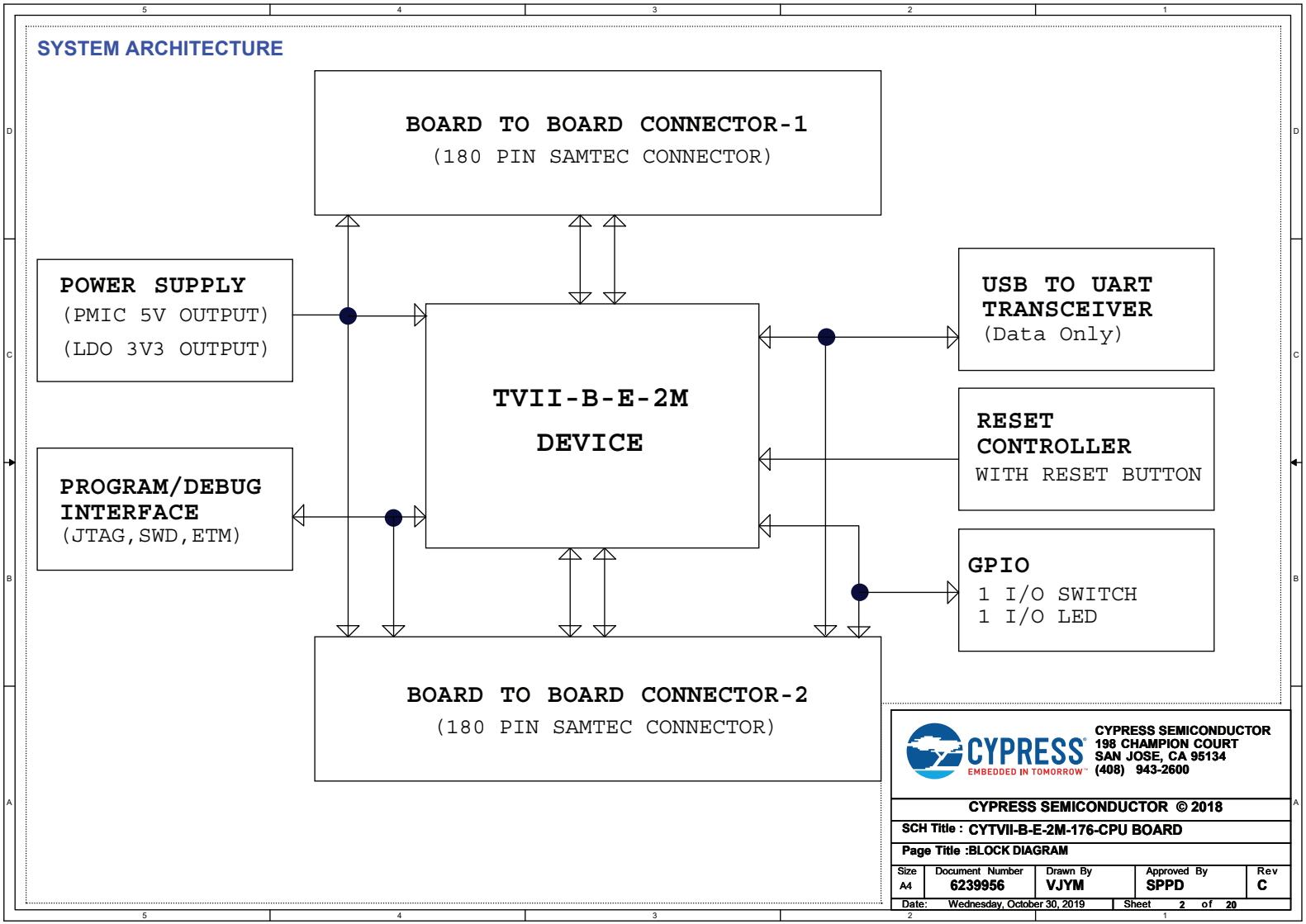

Figure A-2. Power Architecture

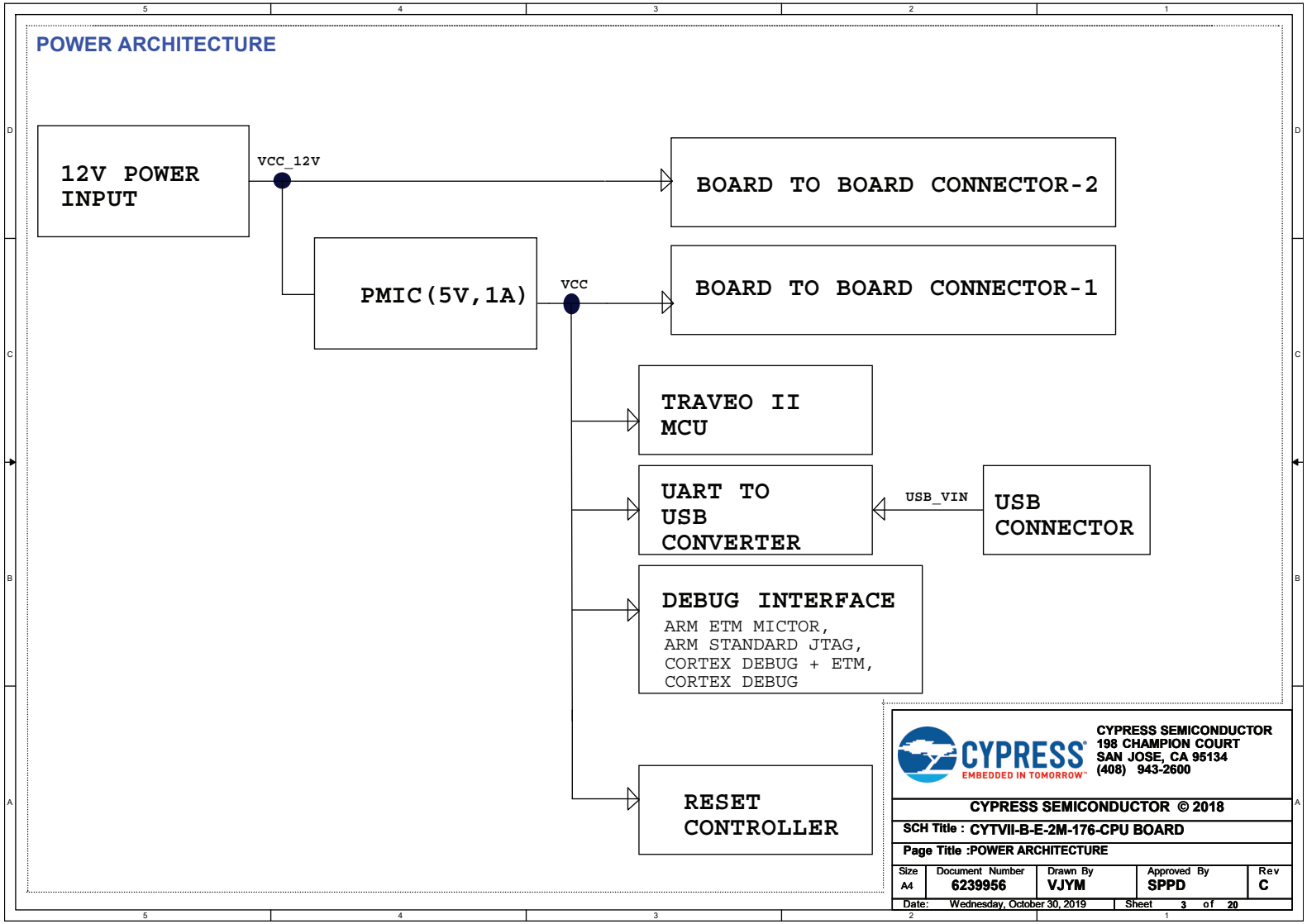

Figure A-3. 5V Power Input

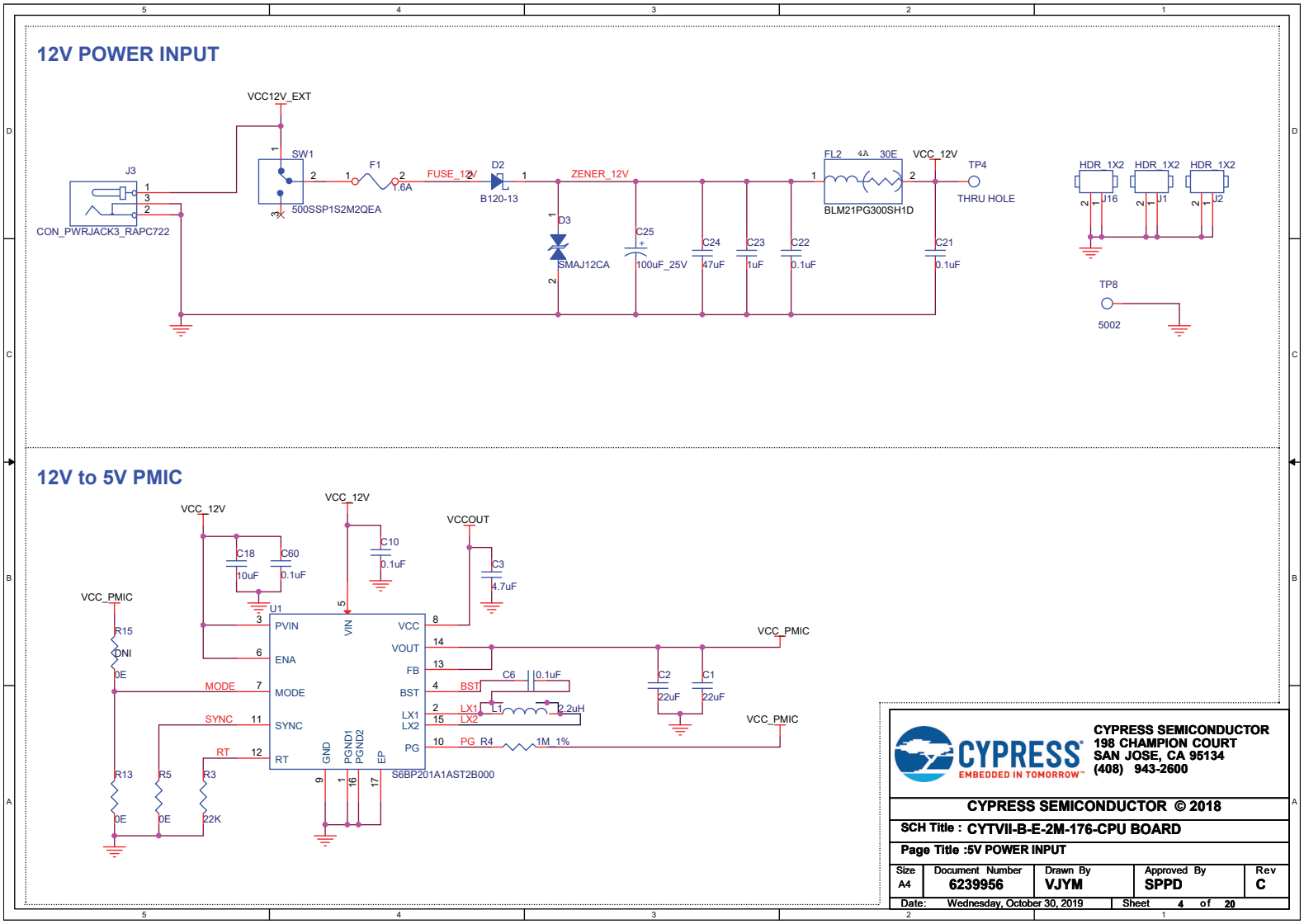

Figure A-4. 3V3 LDO Regulator

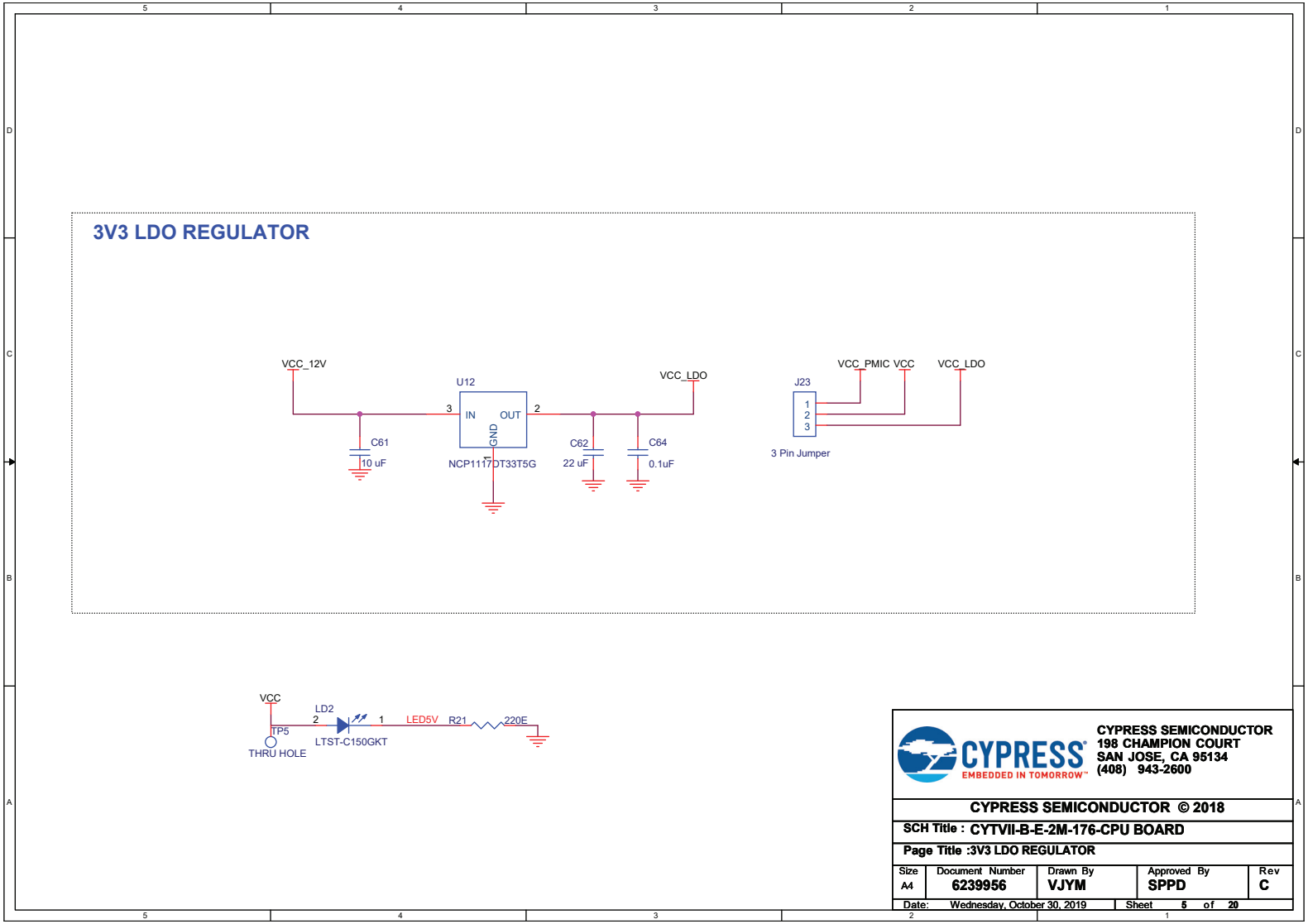

Figure A-5. Debug Interface

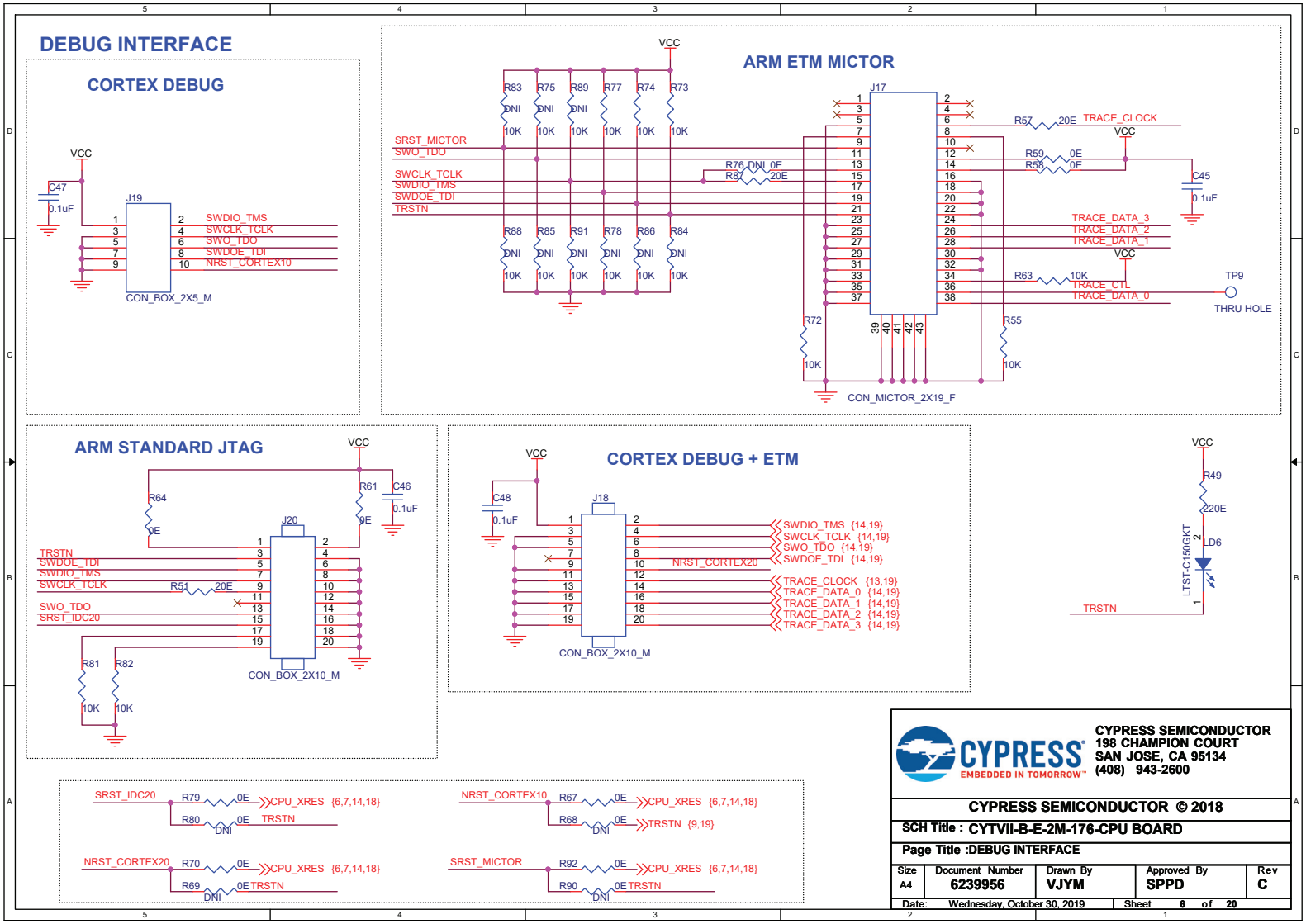

Figure A-6. UART to USB & RESERT

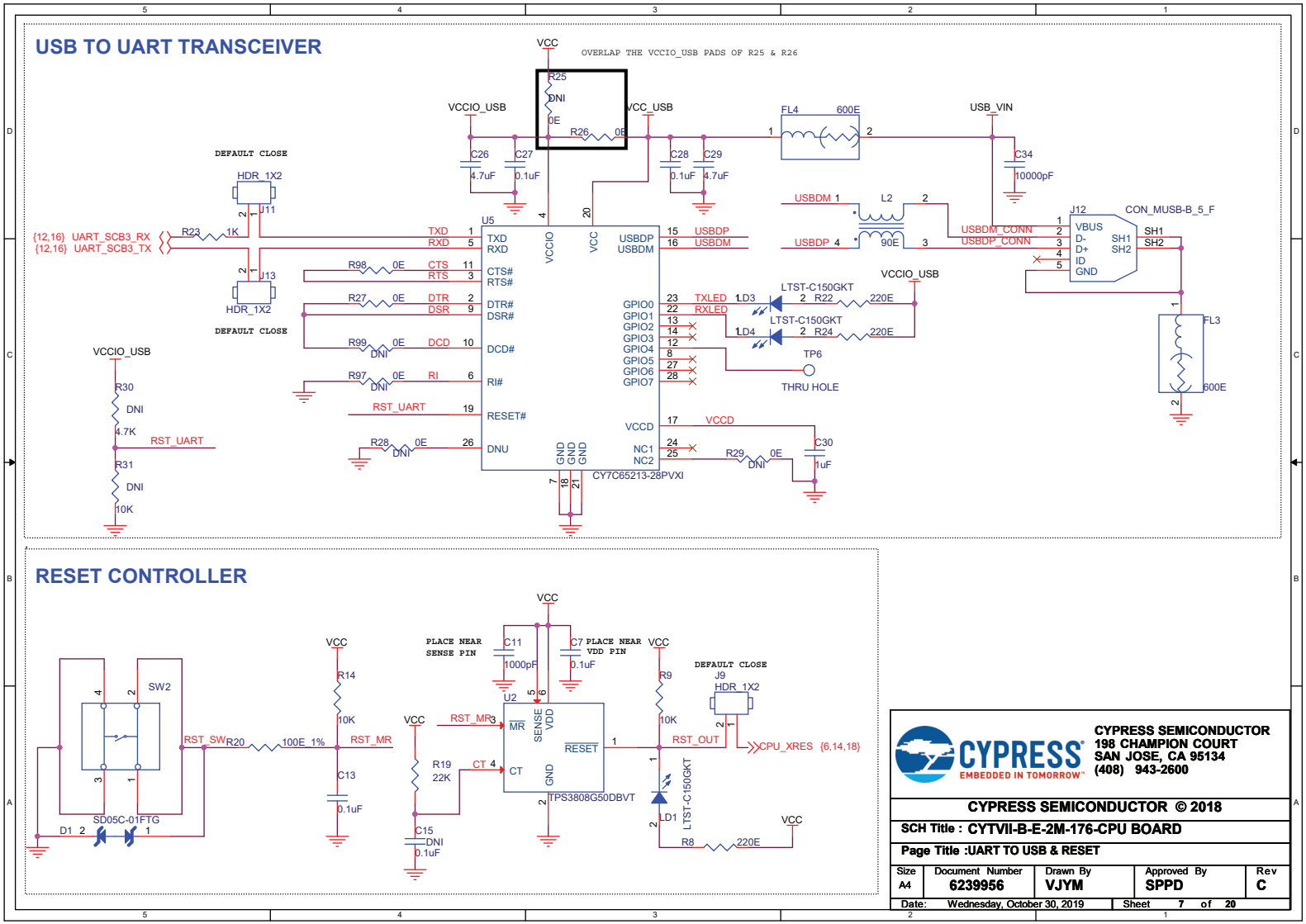

Figure A-7. GPIO, Clock, and Filter

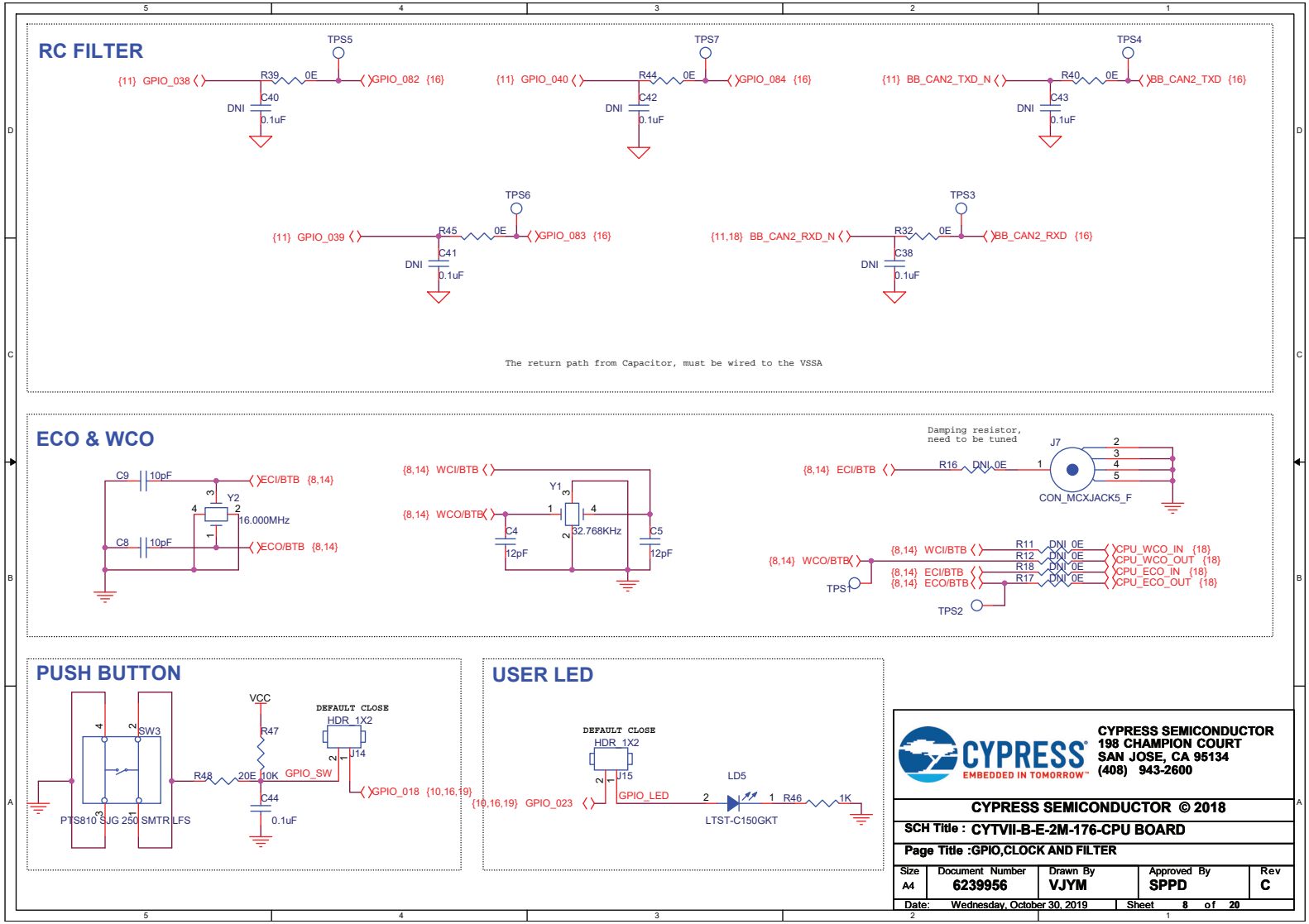

Figure A-8. LQFP-176 P1

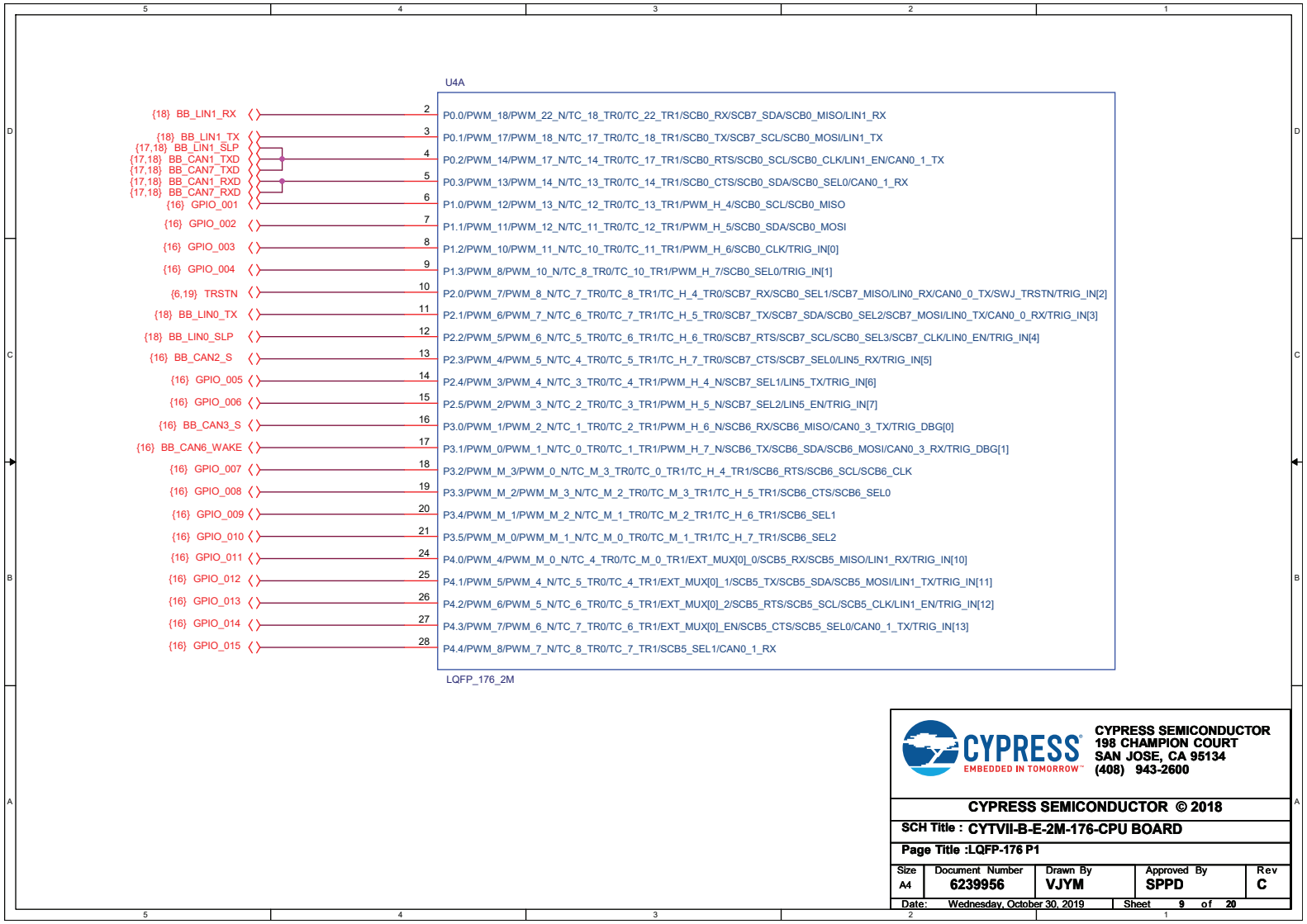

Figure A-9. LQFP-176 P2

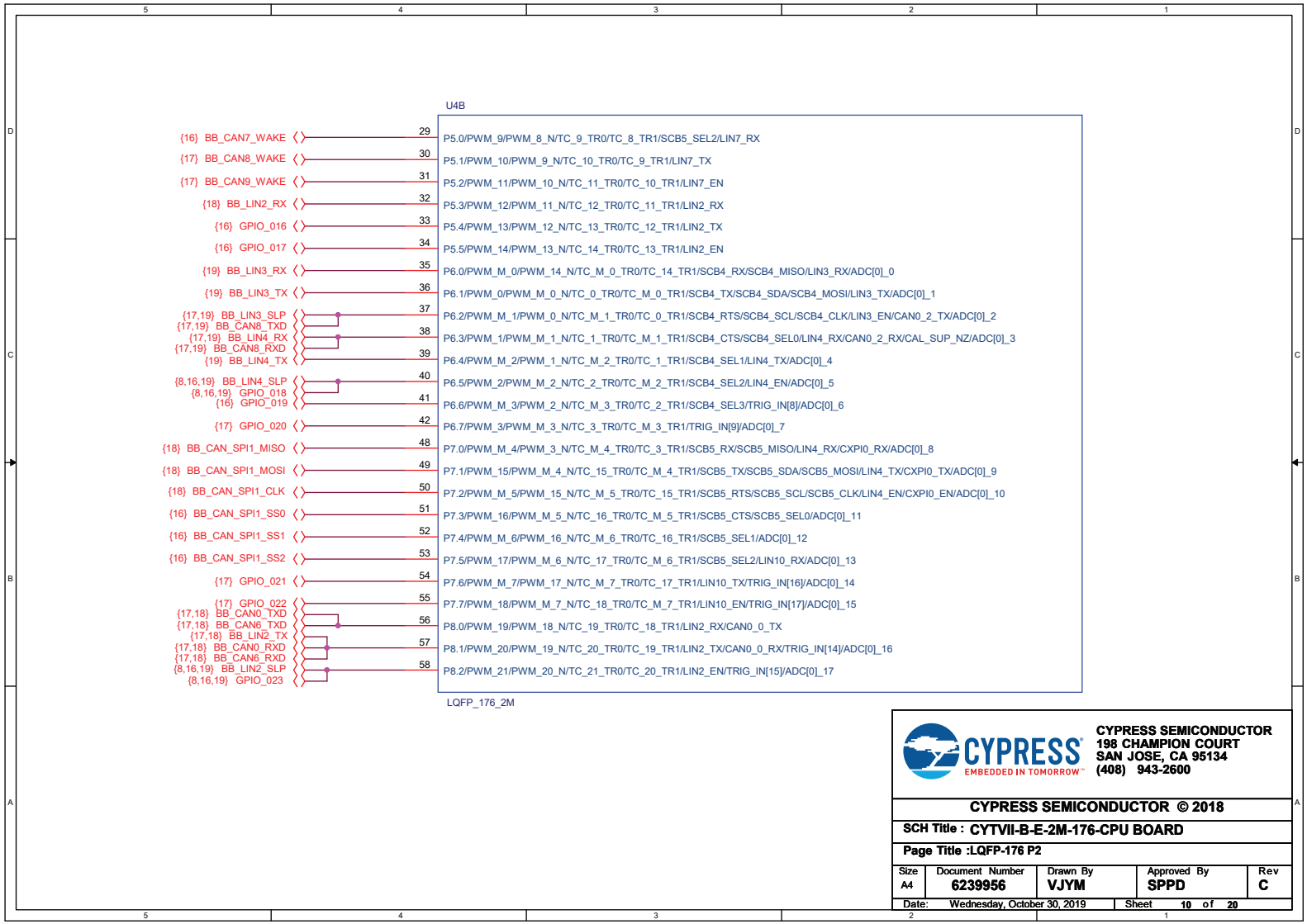

Figure A-10. LQFP-176 P3

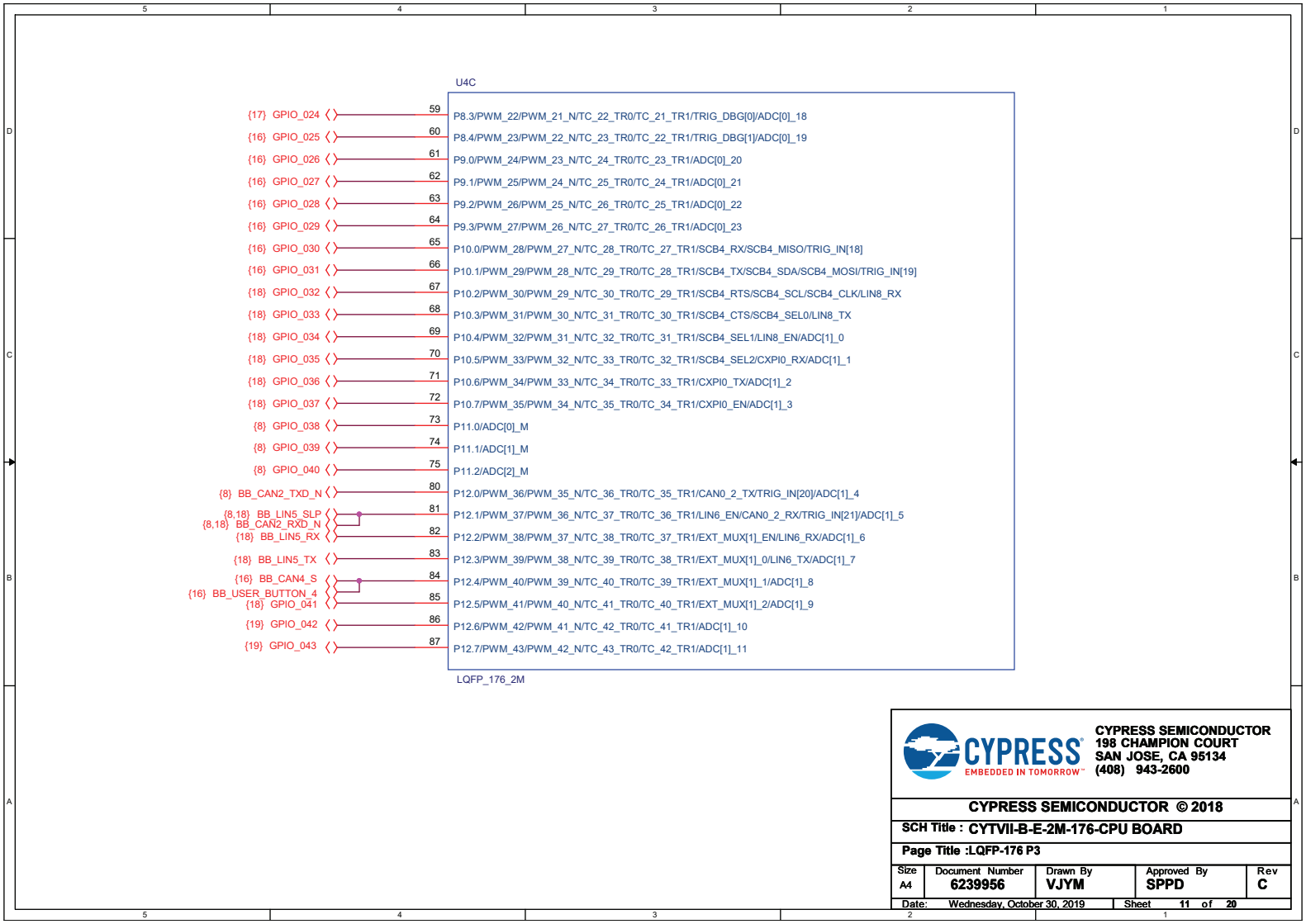

Figure A-11. LQFP-176 P4

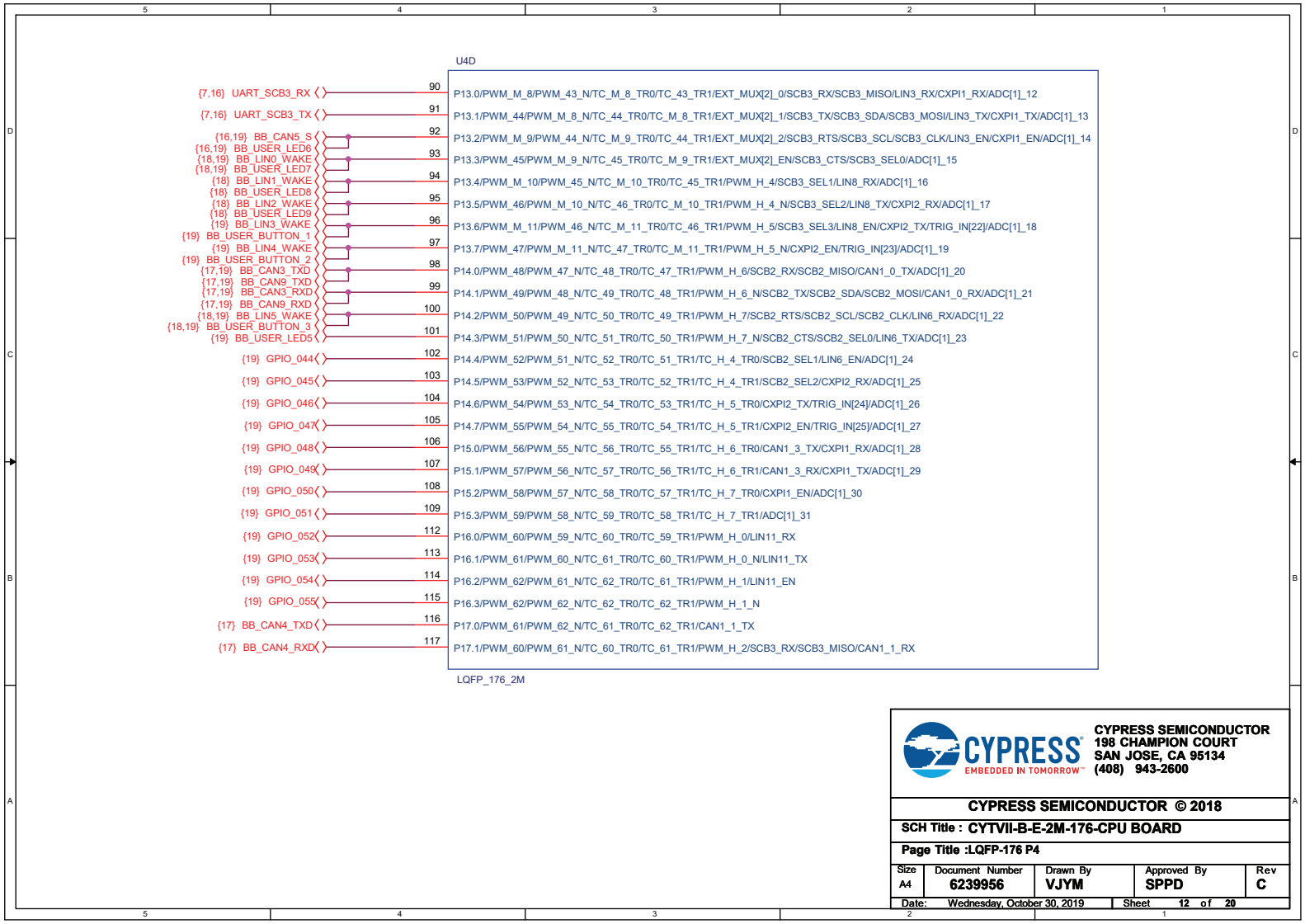

Figure A-12. LQFP-176 P5

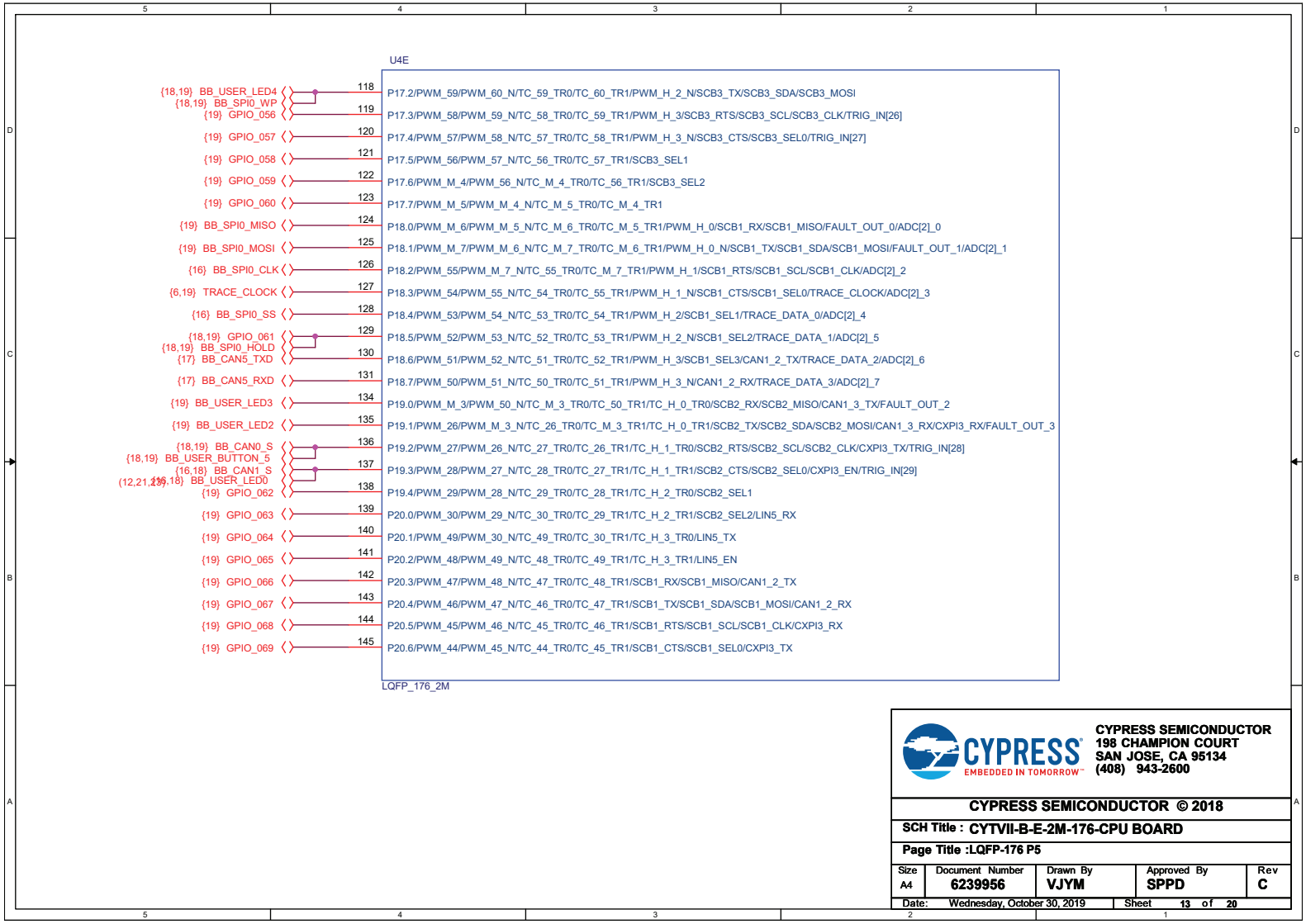

Figure A-13. LQFP-176 P6

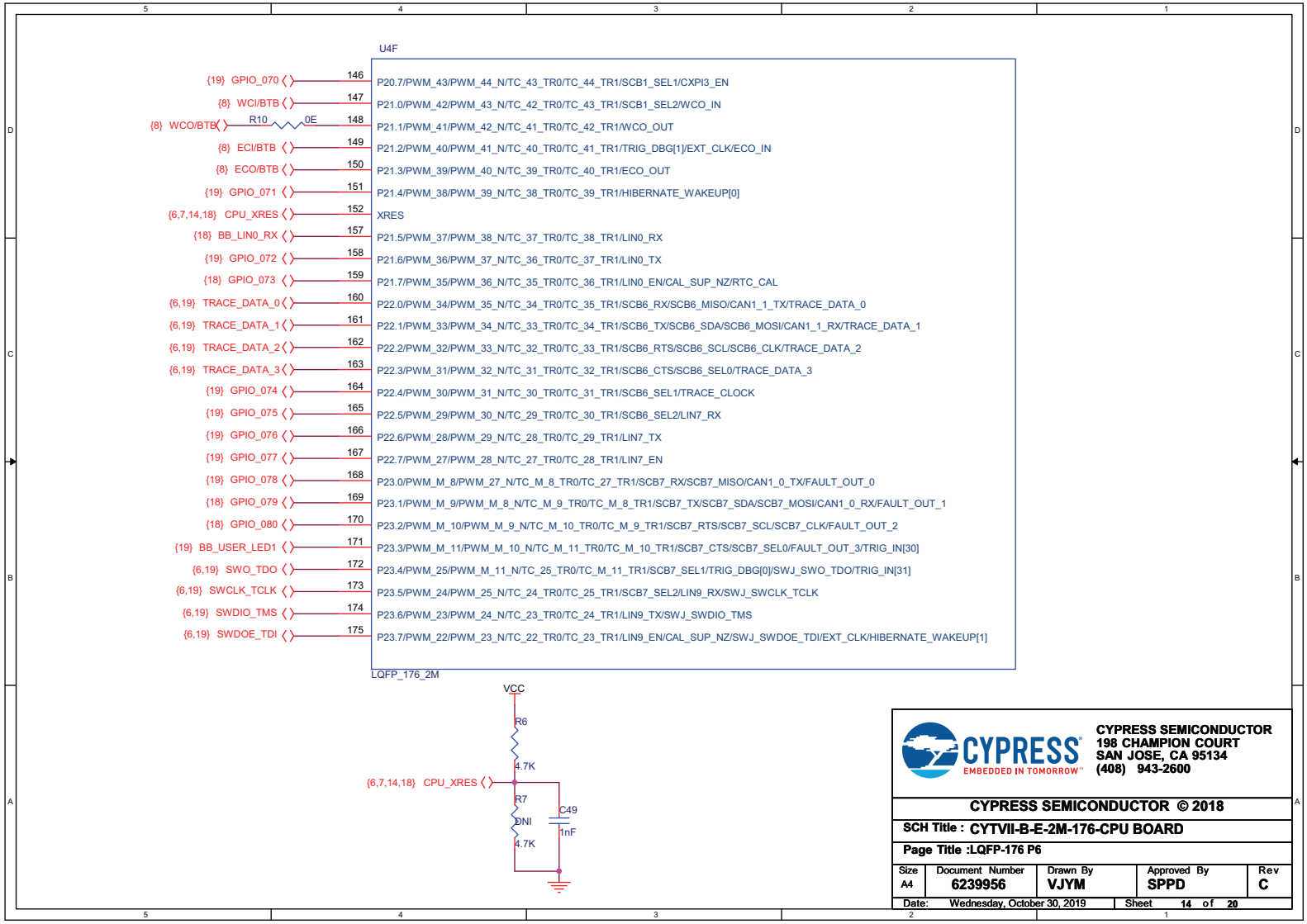

Figure A-14. LQFP-176 P7

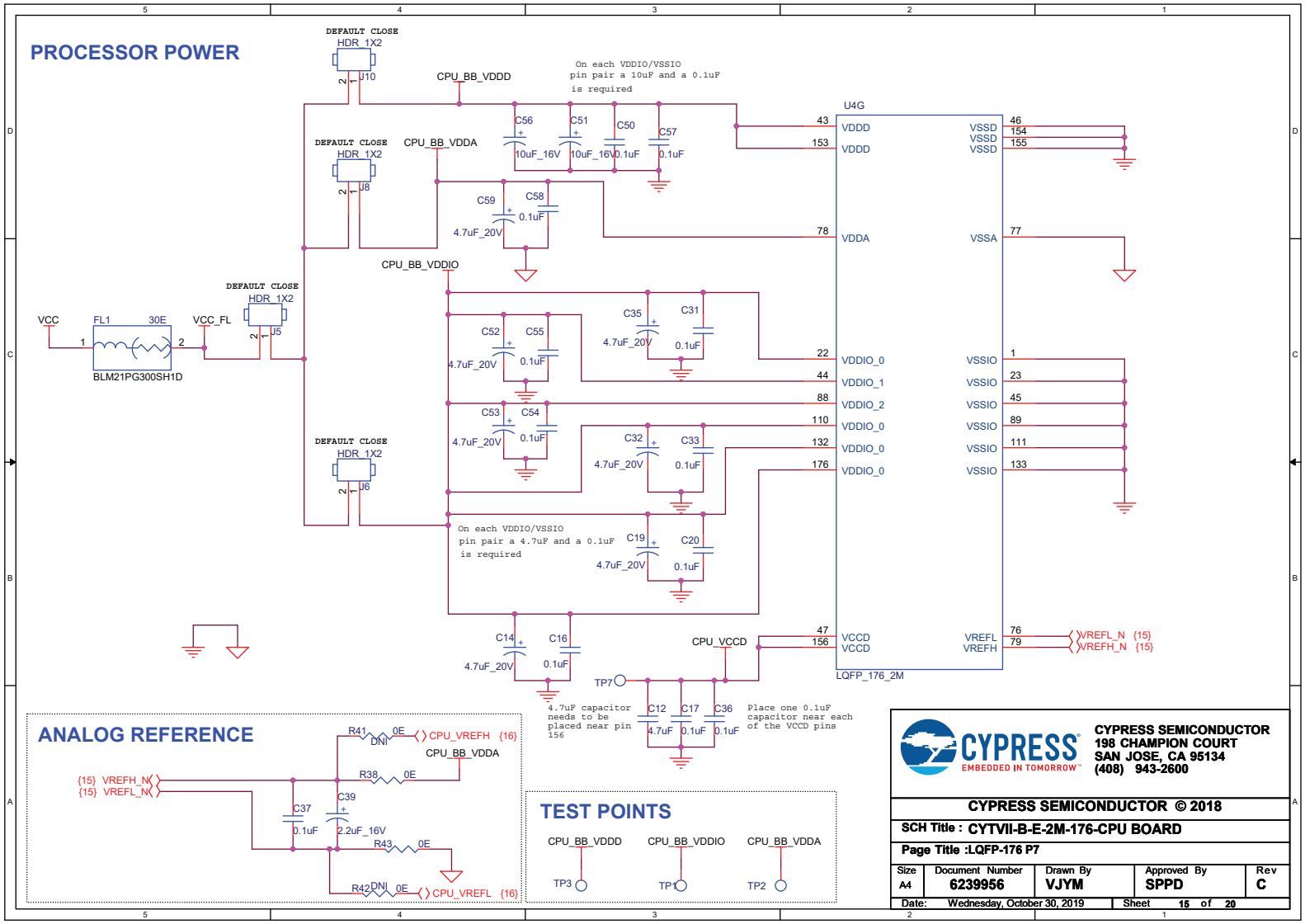

Figure A-15. Board to Board Connector- J22A

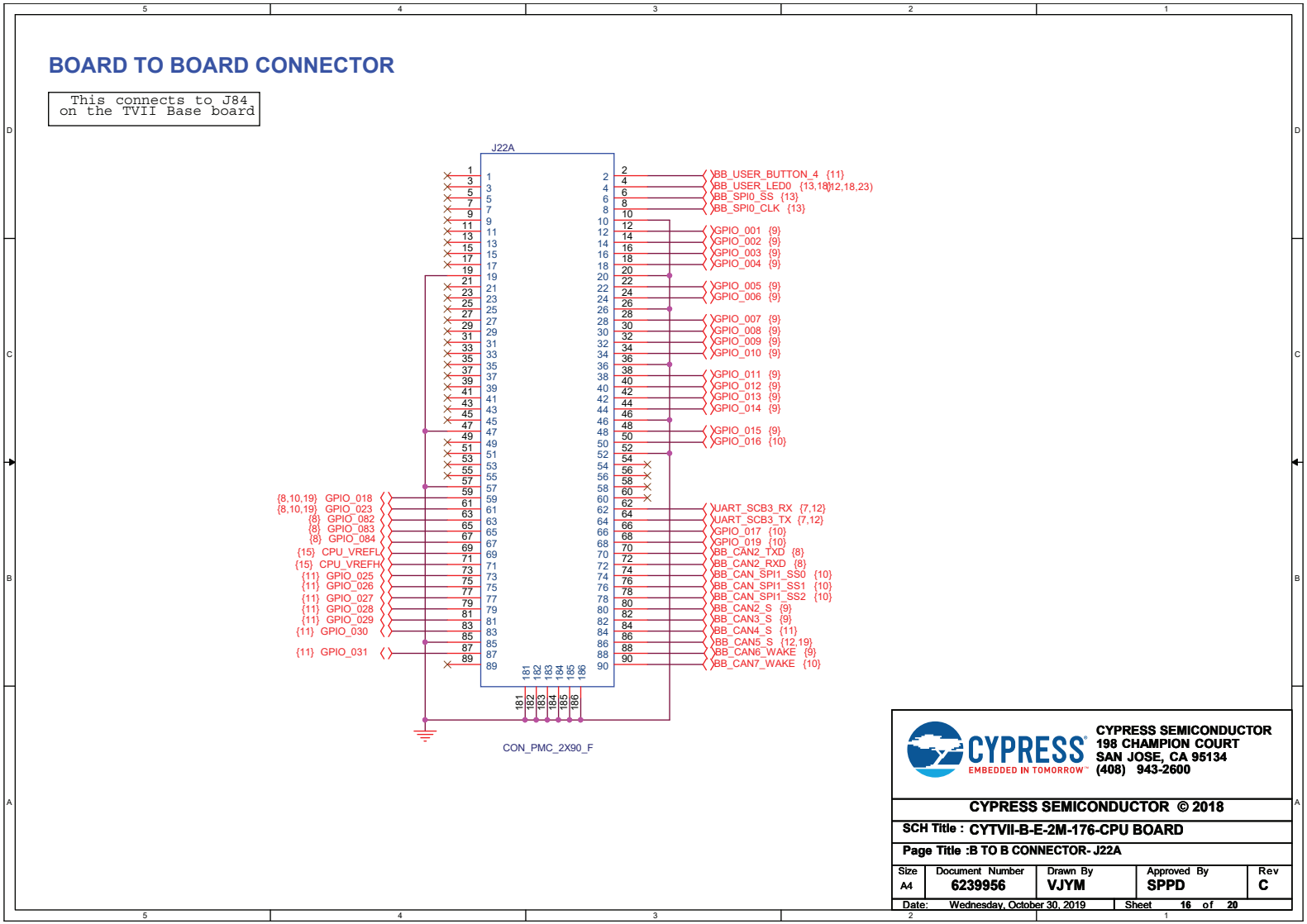

Figure A-16. Board to Board Connector- J22B

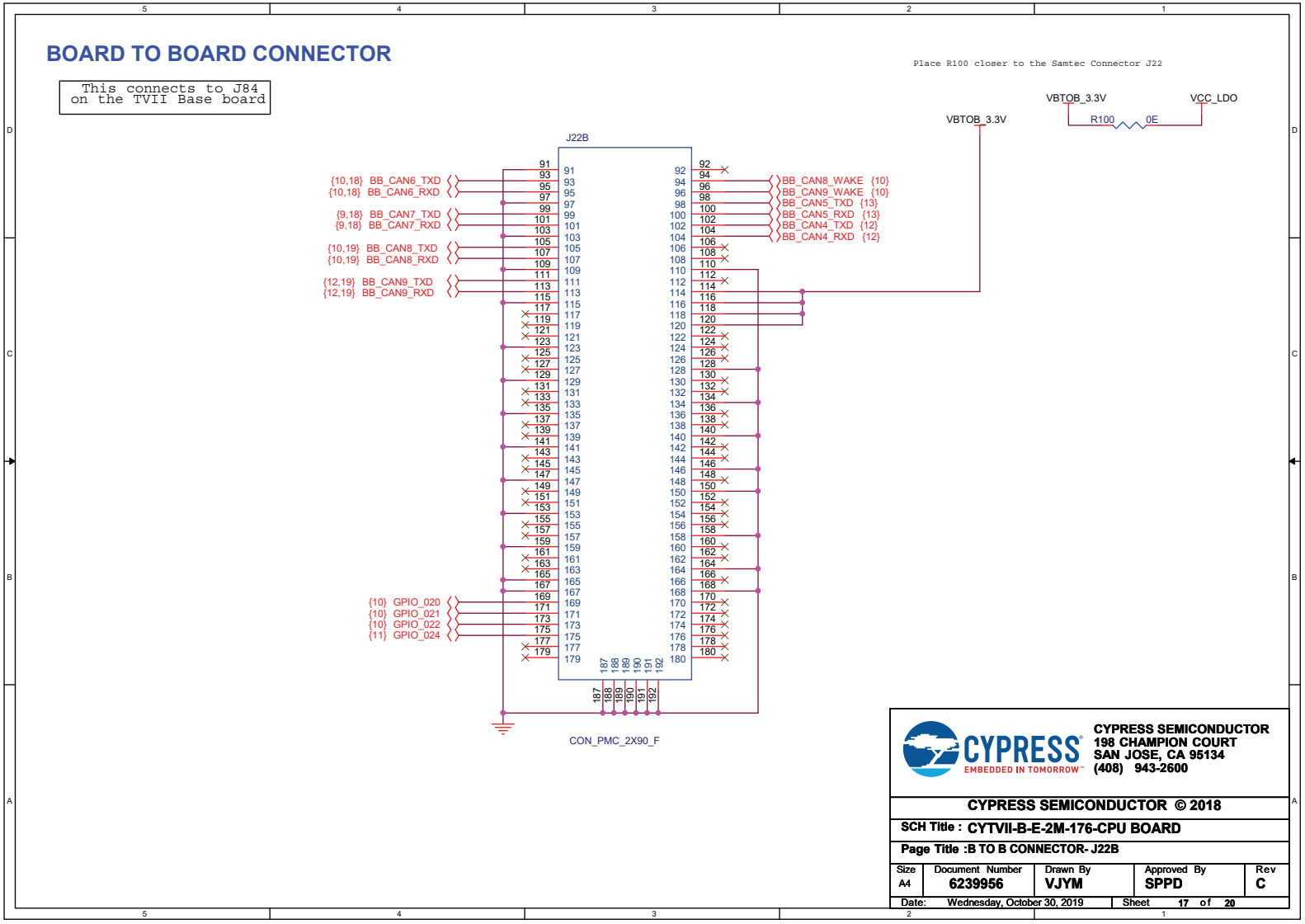

Figure A-17. Board to Board Connector- J21A

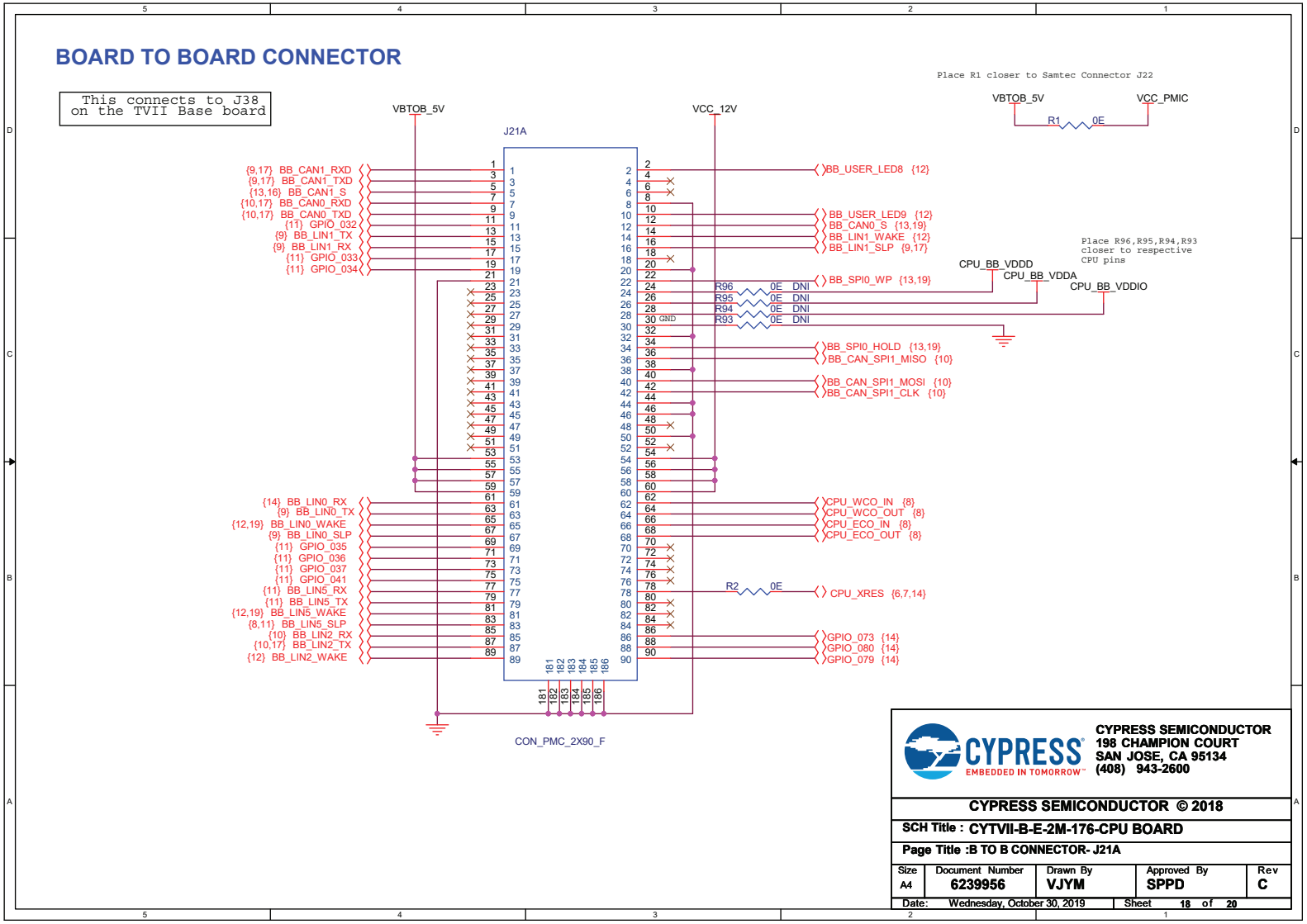

Figure A-18. Board to Board Connector- J21B

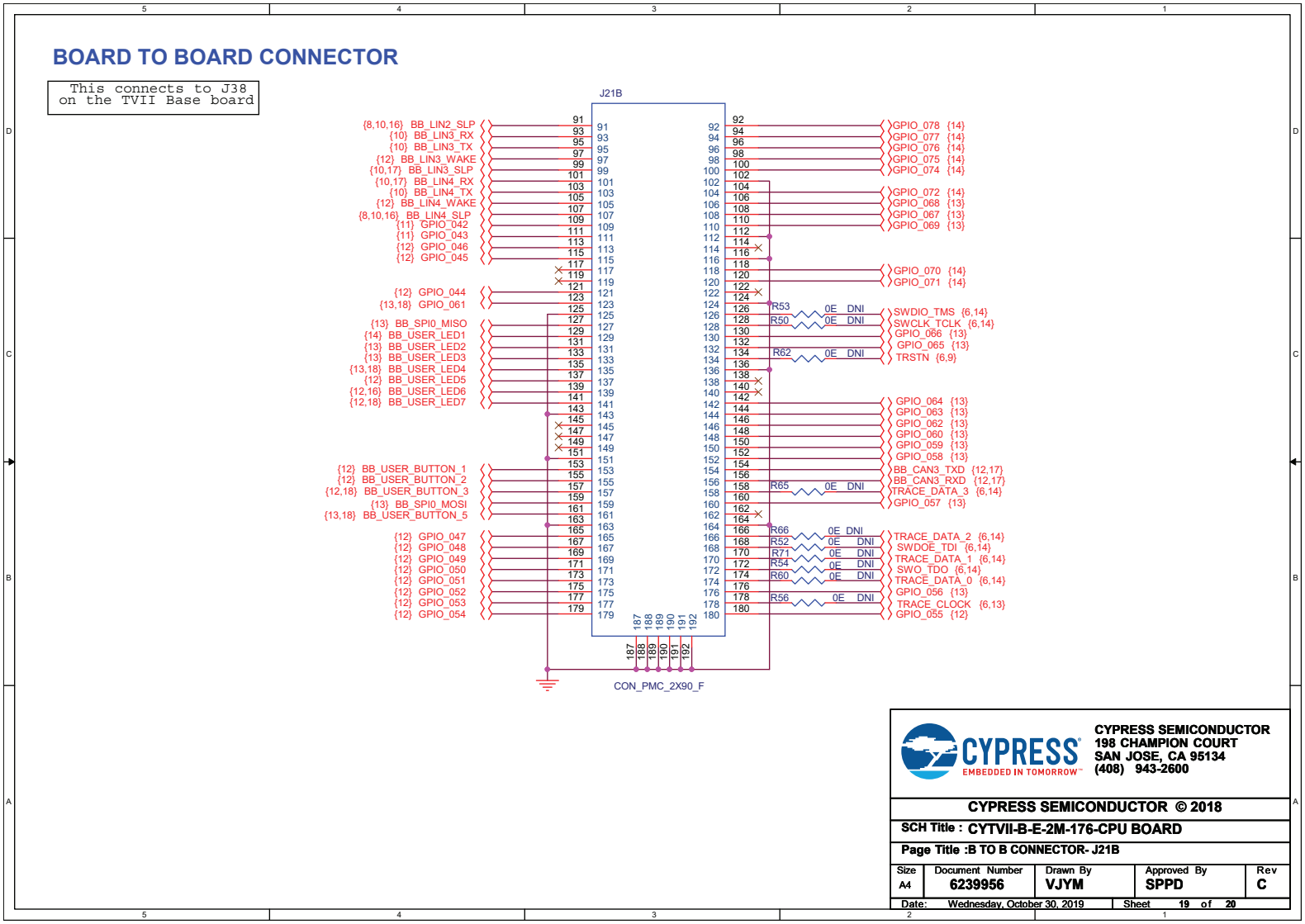

B. Component Assembly on CPU Board

This appendix shows the top and bottom assembly of the PCB.

Figure B-1. Top Assembly of the PCB

ART FILM - PASSY

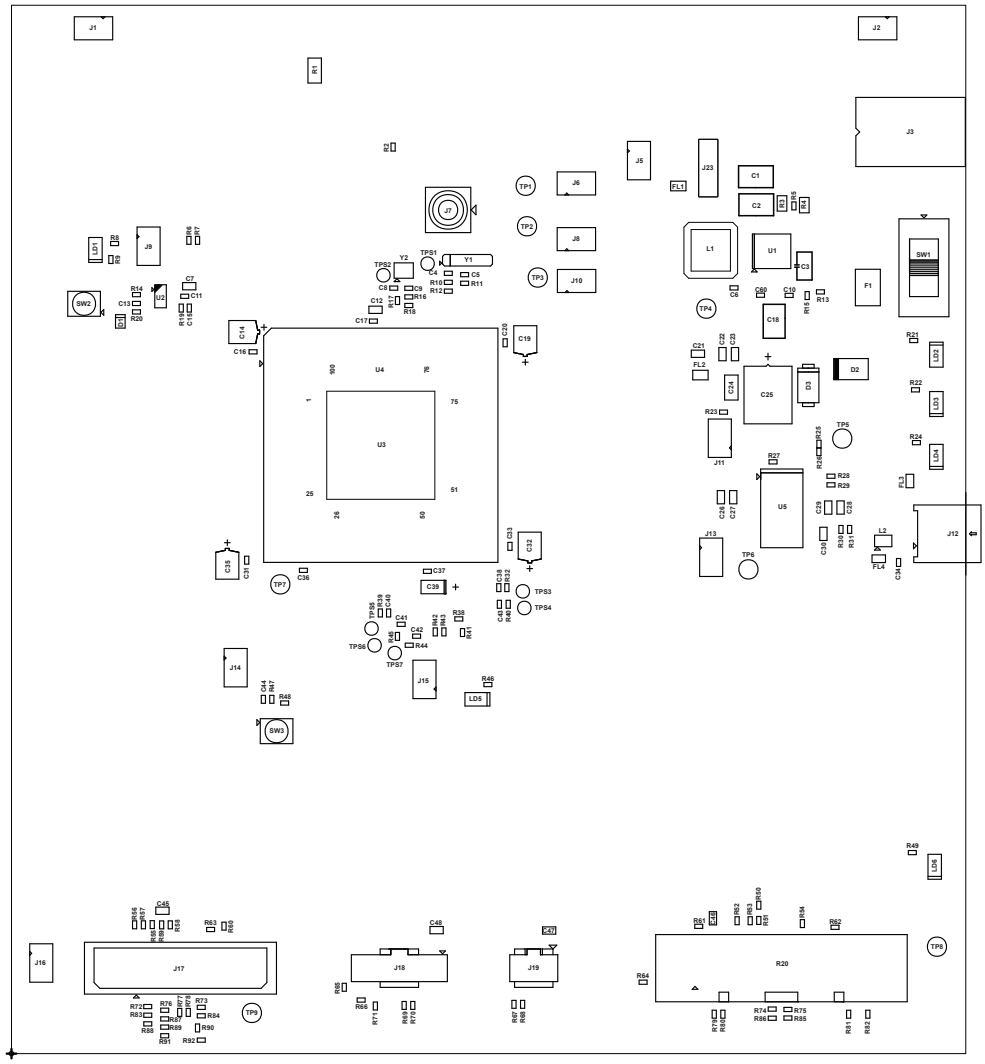

PRIMARY_ASSEMBLY

Figure B-2. Bottom Assembly of the PCB

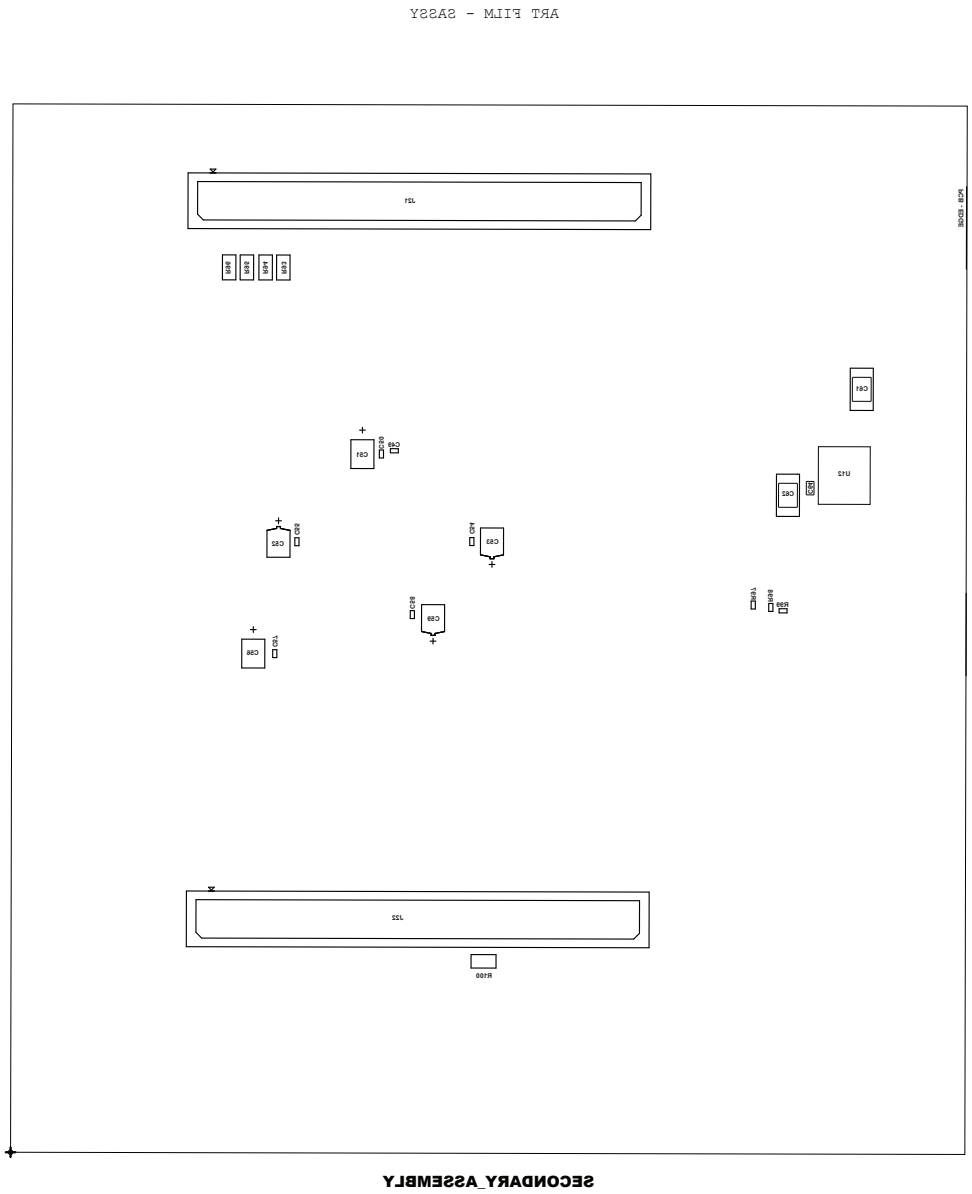

C. Schematics of Base Board

This appendix contains the schematics of the Base board on which CPU Board is mounted.

Figure C-1. Block Diagram of Base Board

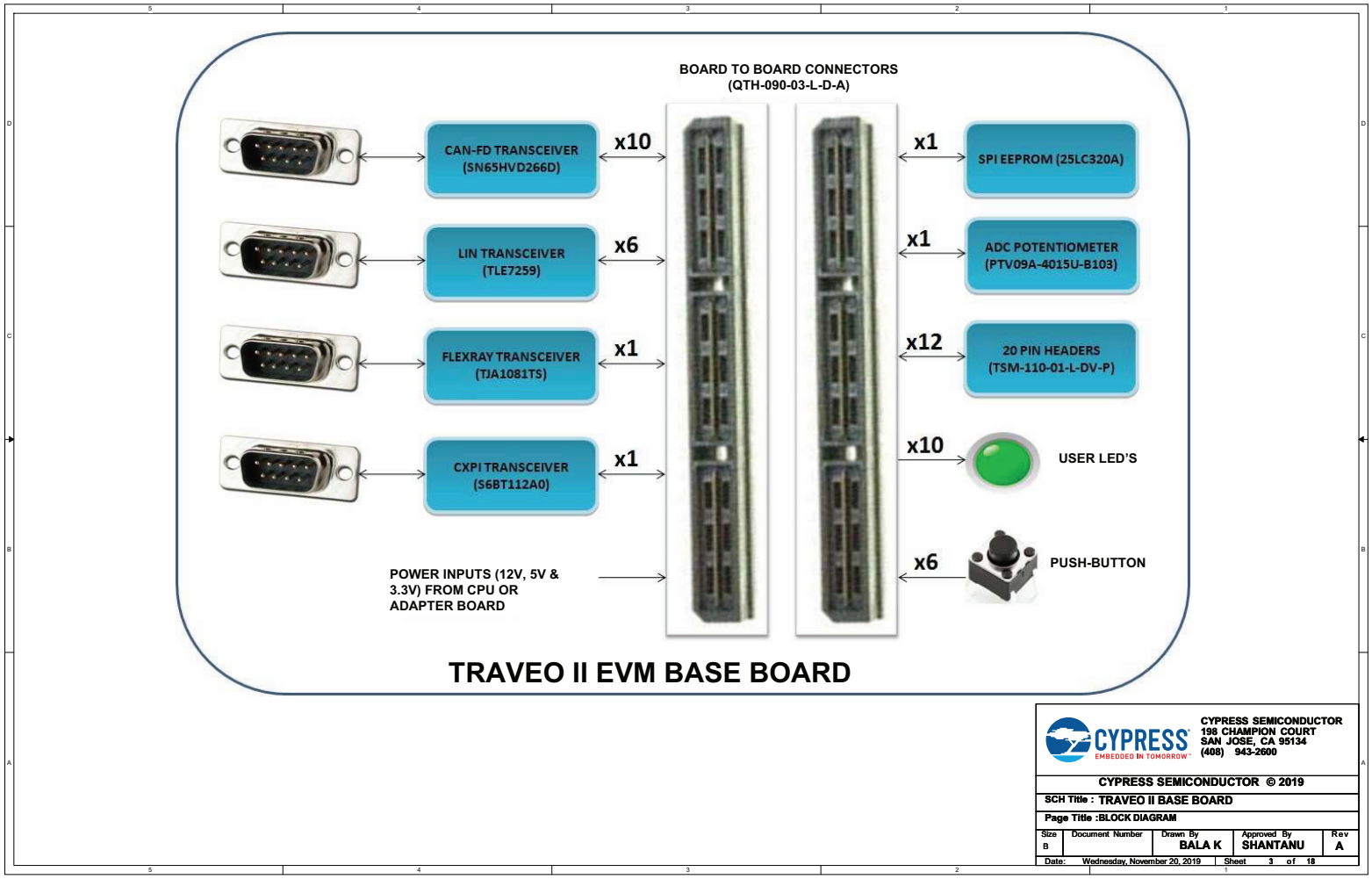

Figure C-2. BTOB Connector-01

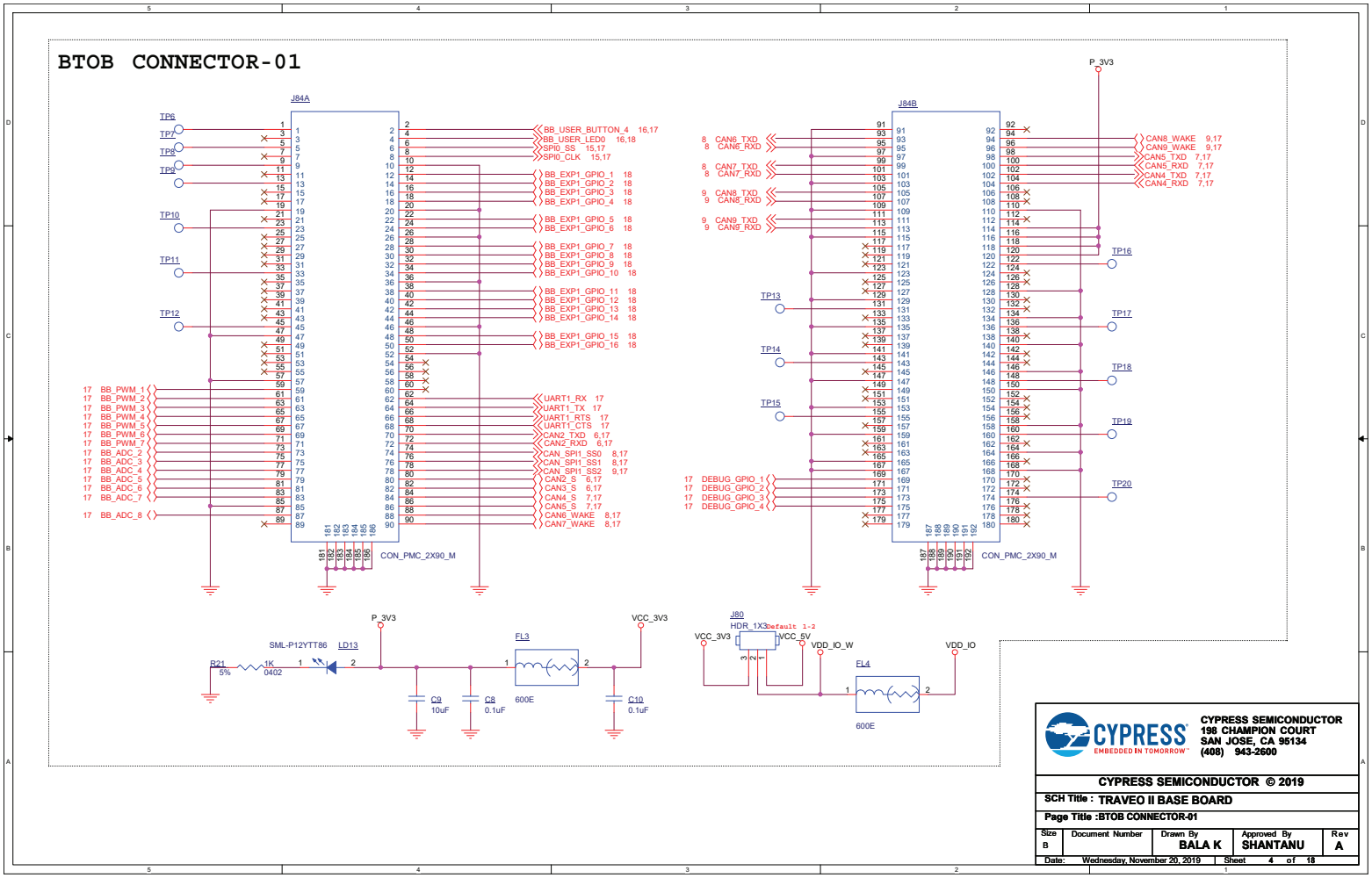

Figure C-3. BTOB Connector-02

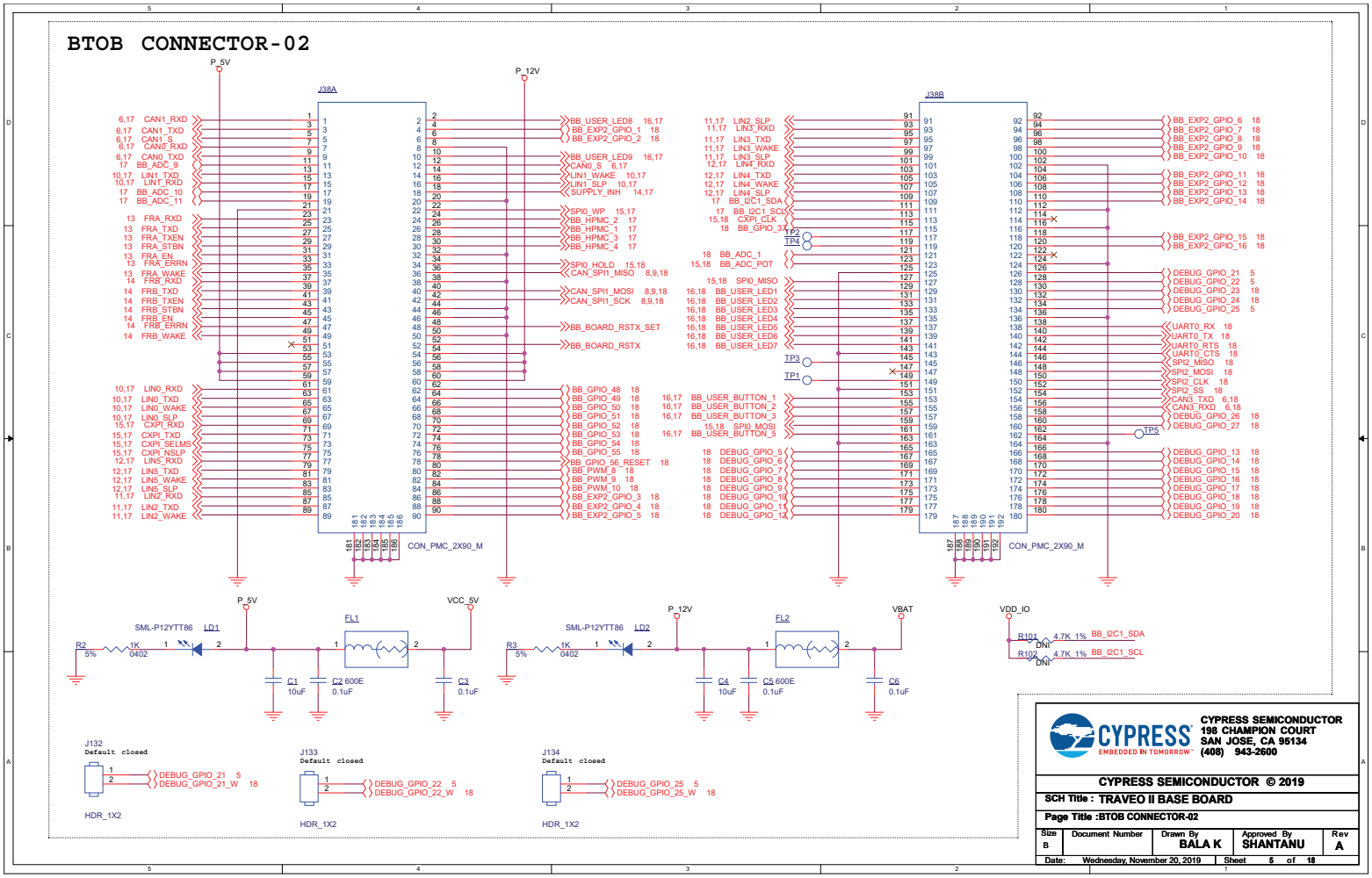

Figure C-4. CAN-FD_0 to 3

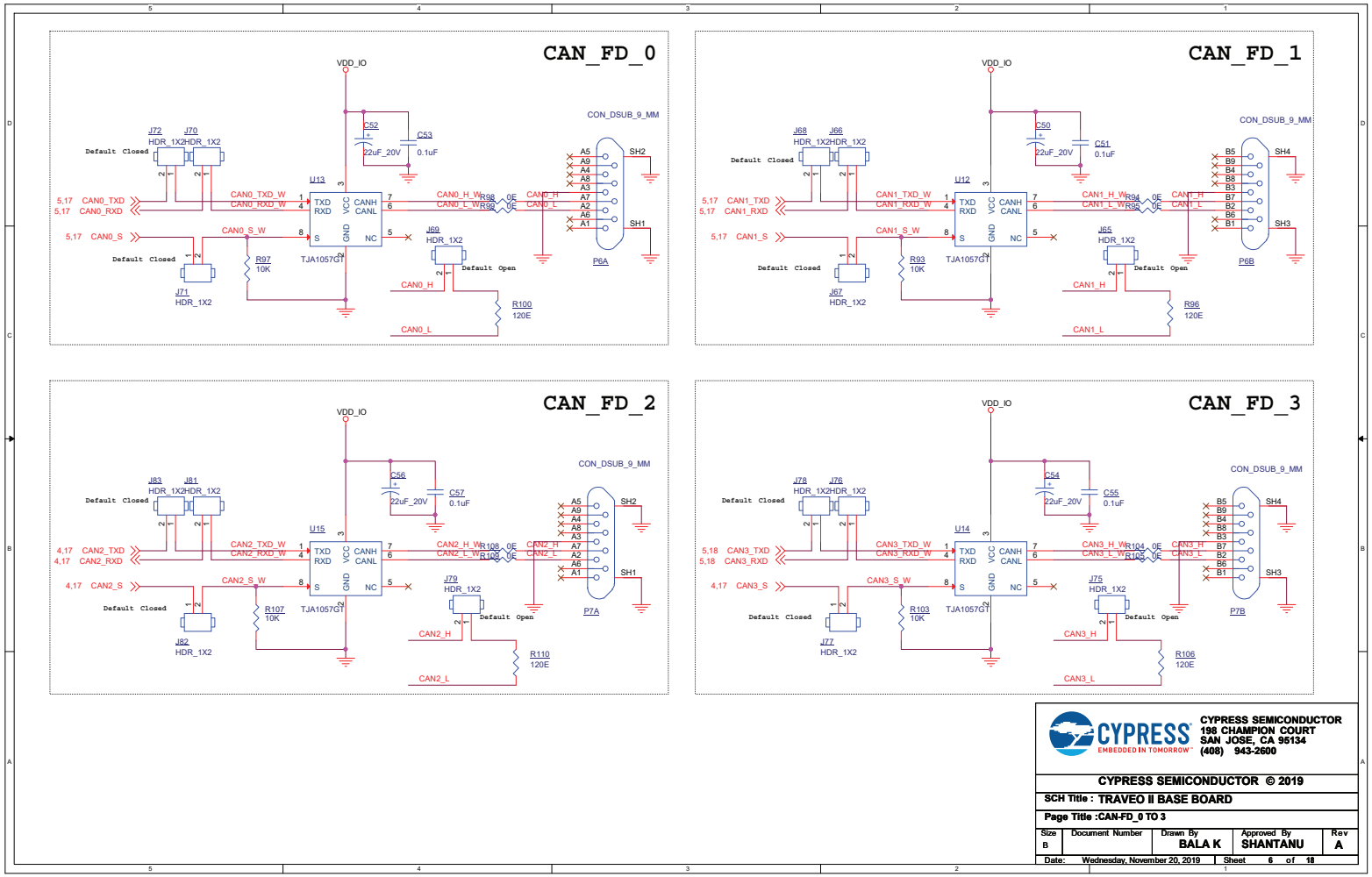

Figure C-5. CAN-FD_4 to 7

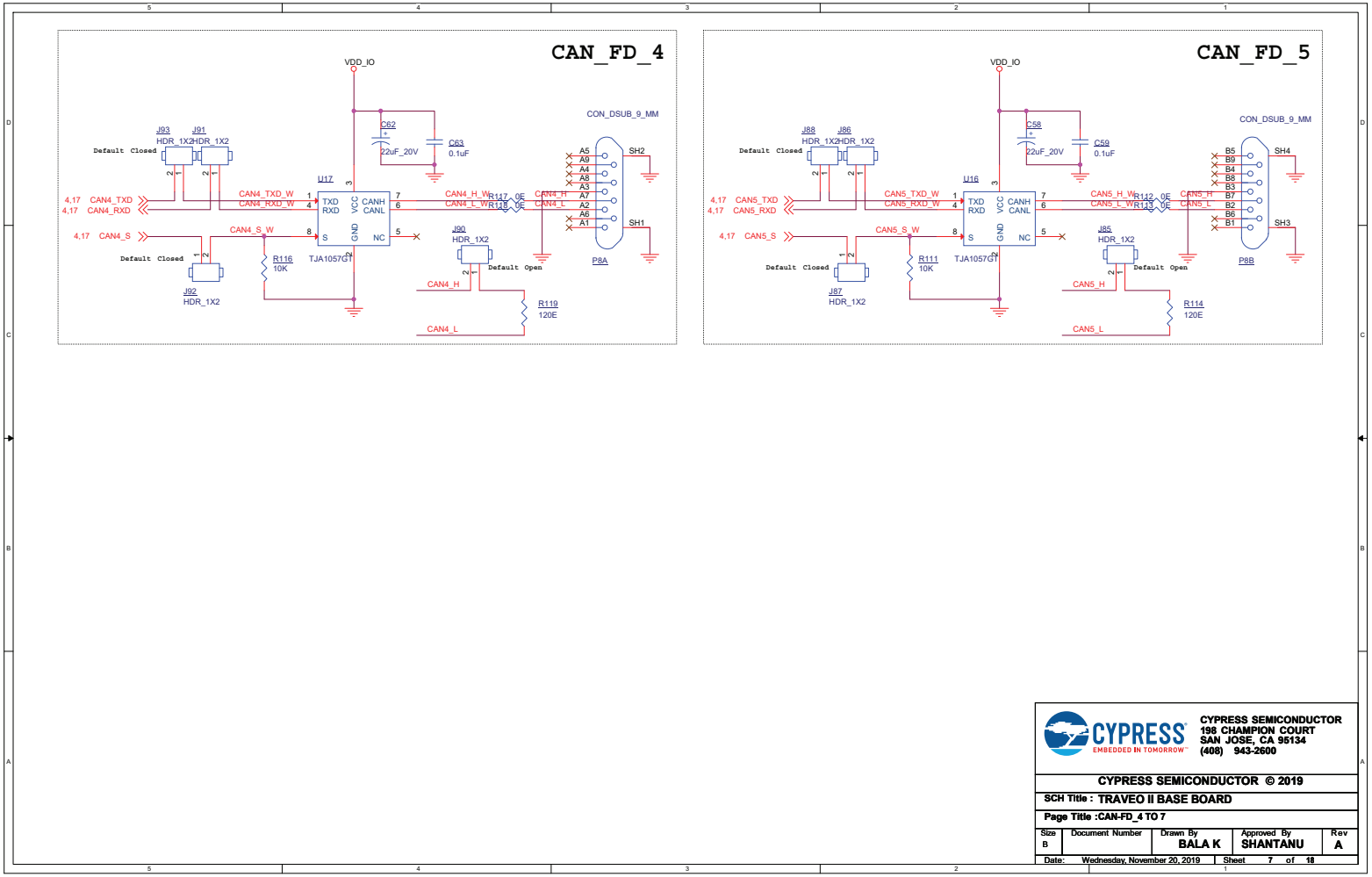

Figure C-6. CAN-FD_6 & 7

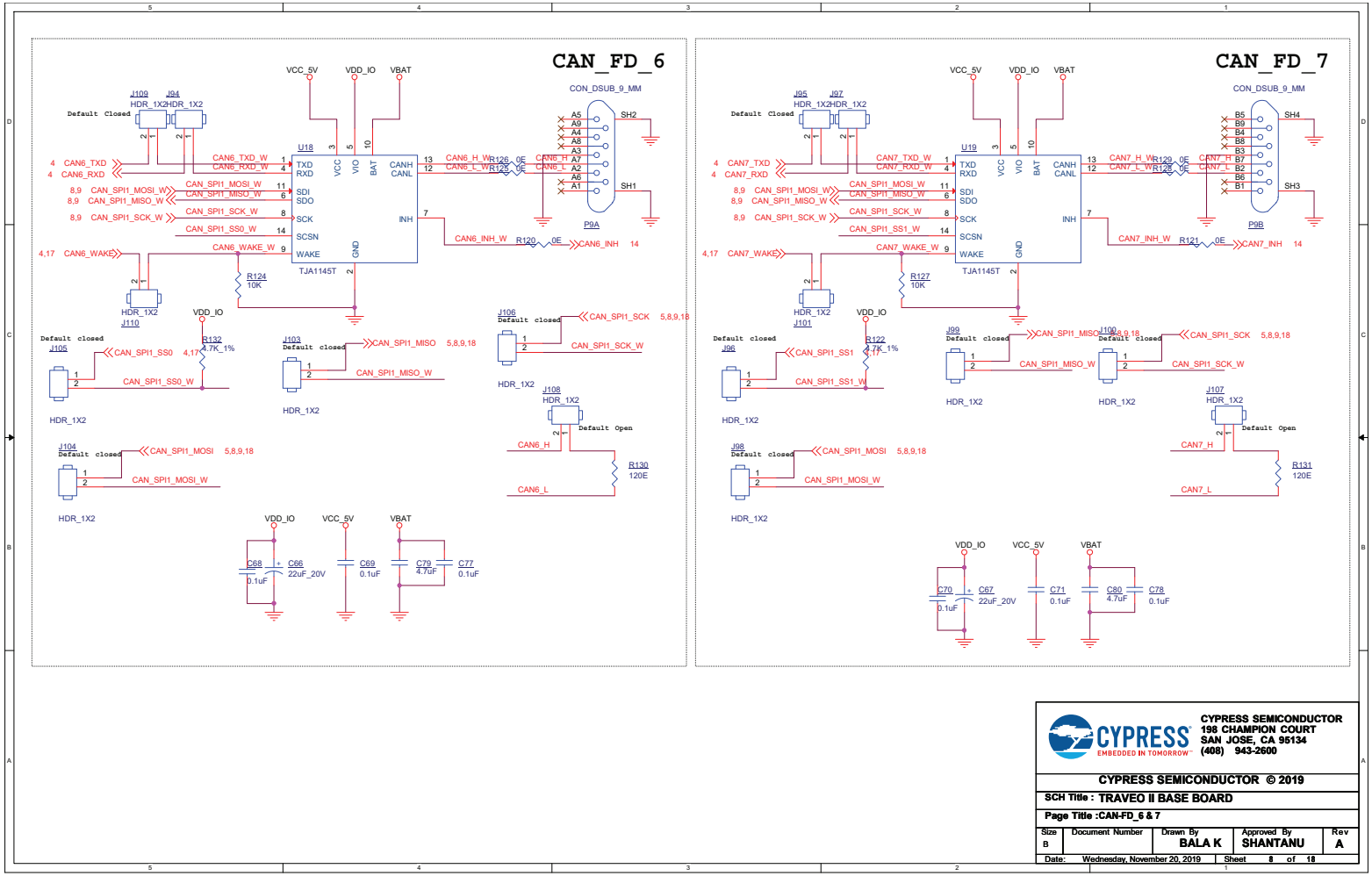

Figure C-7. CAN-FD_8 & 9

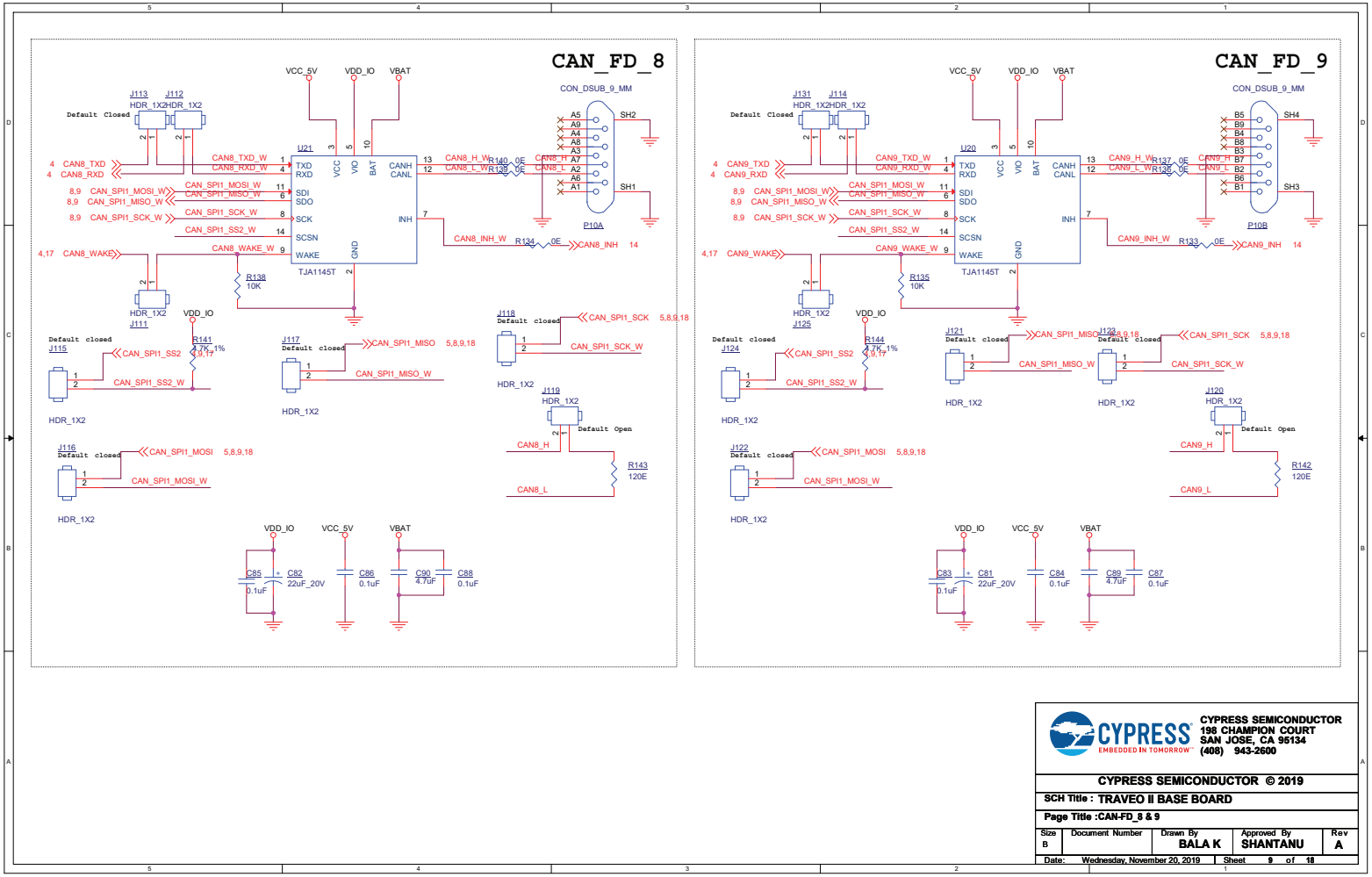

Figure C-8. LIN INTERFACE_0 to 1

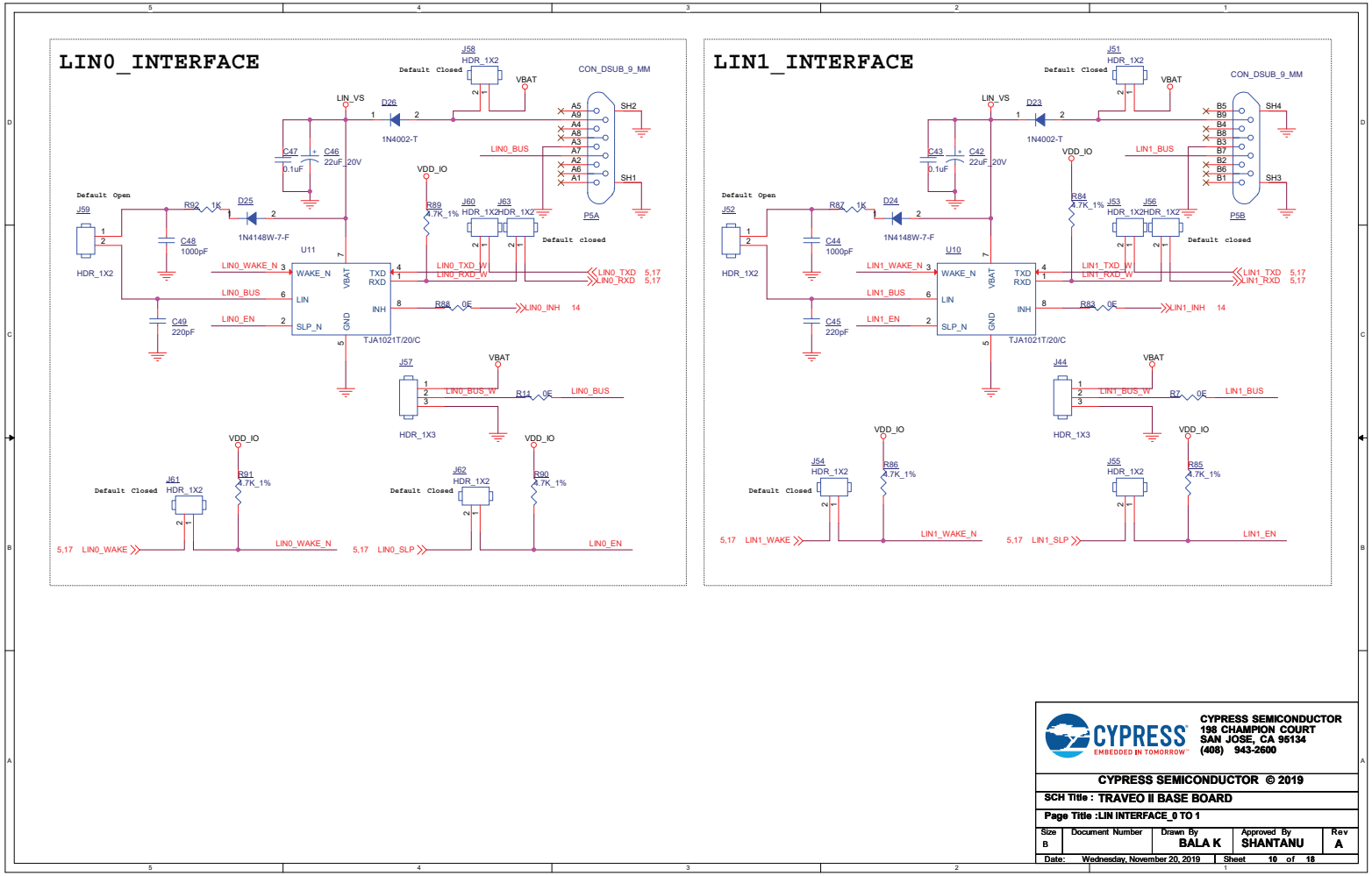

Figure C-9. LIN INTERFACE_2 to 3

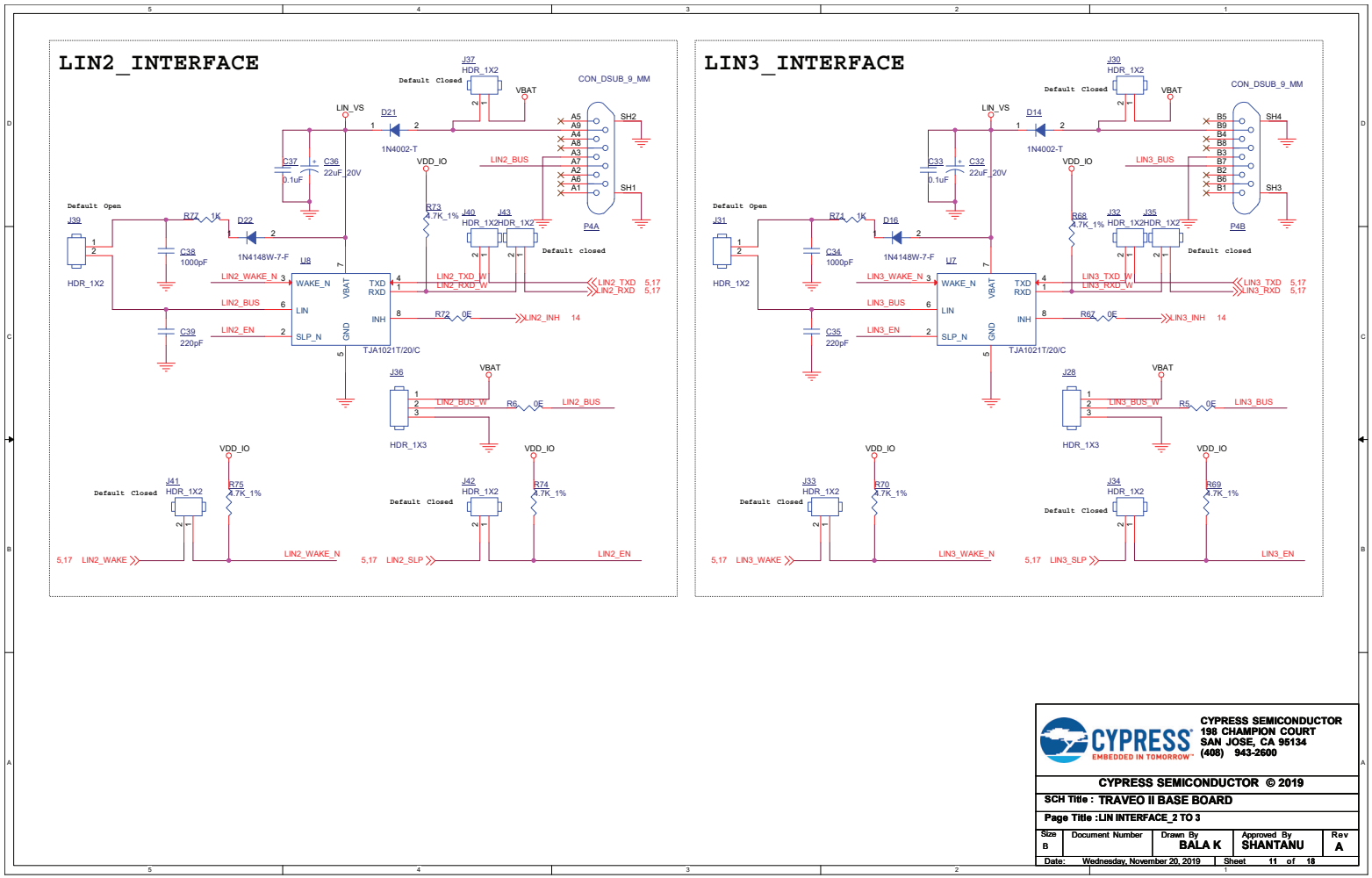

Figure C-10. LIN INTERFACE_4 to 5

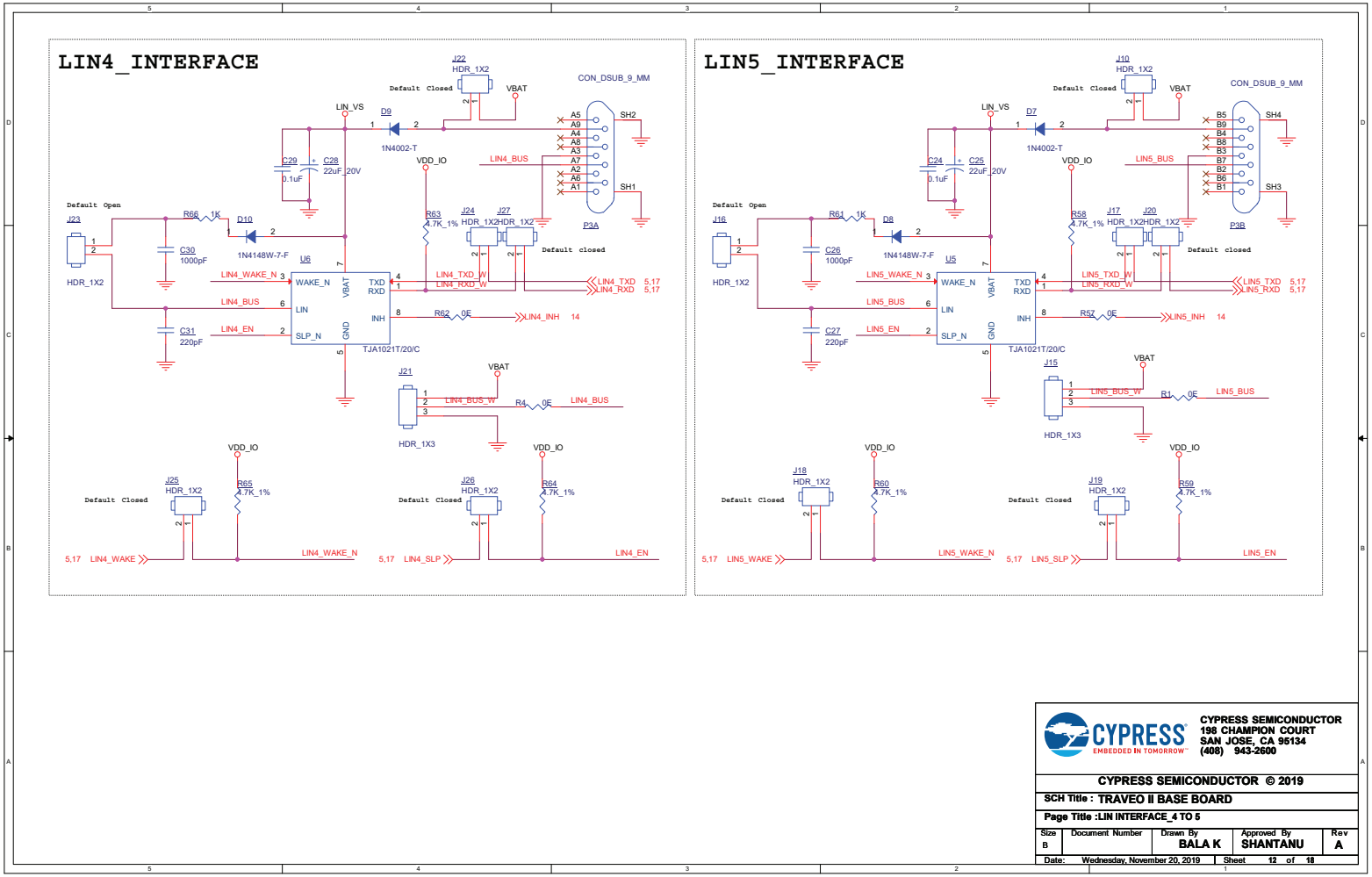

Figure C-11. Flexray-01 & RESET

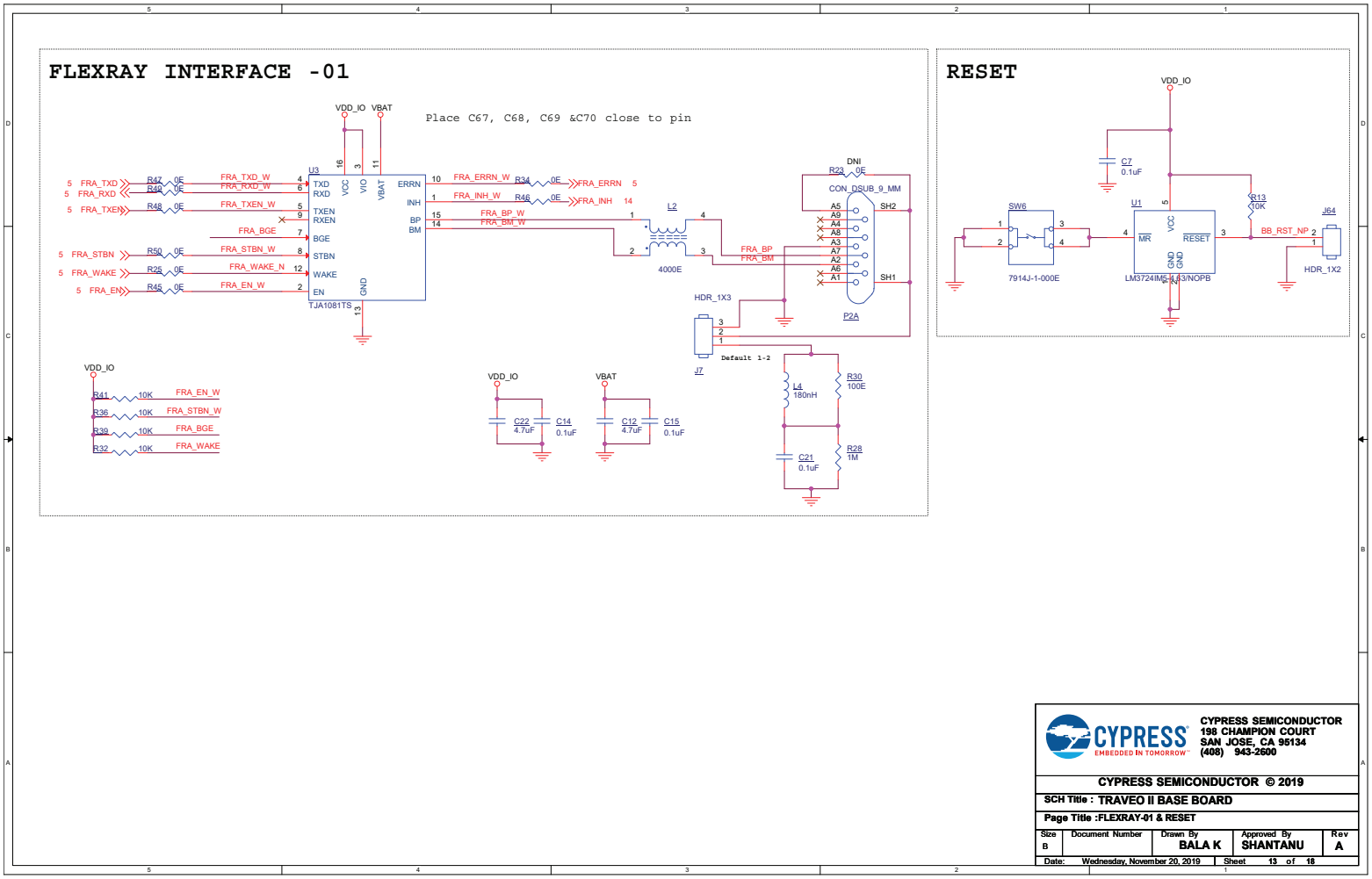

Figure C-12. Flexray-02 & INH

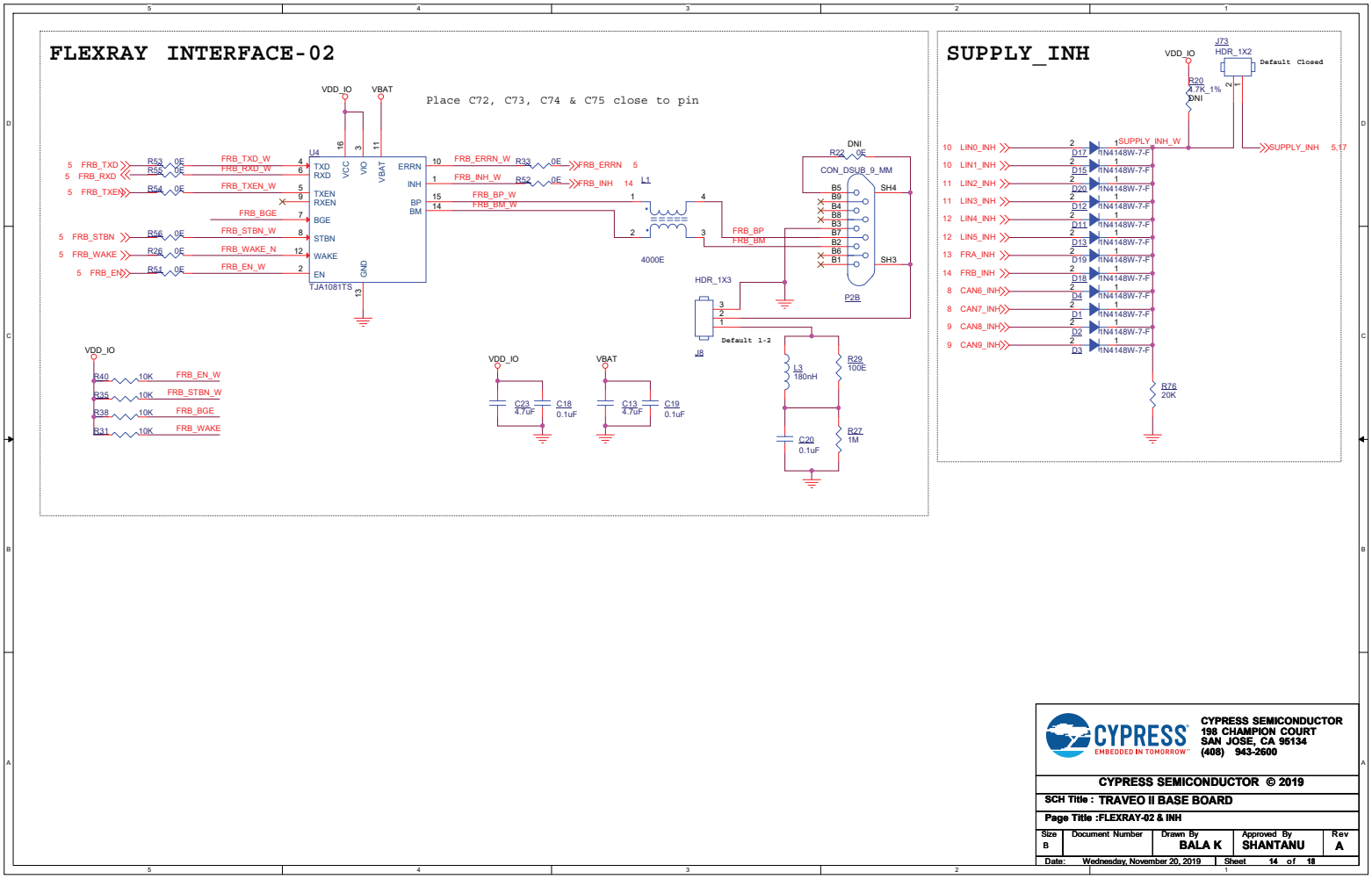

Figure C-13. CXPI, EEPROM & POT

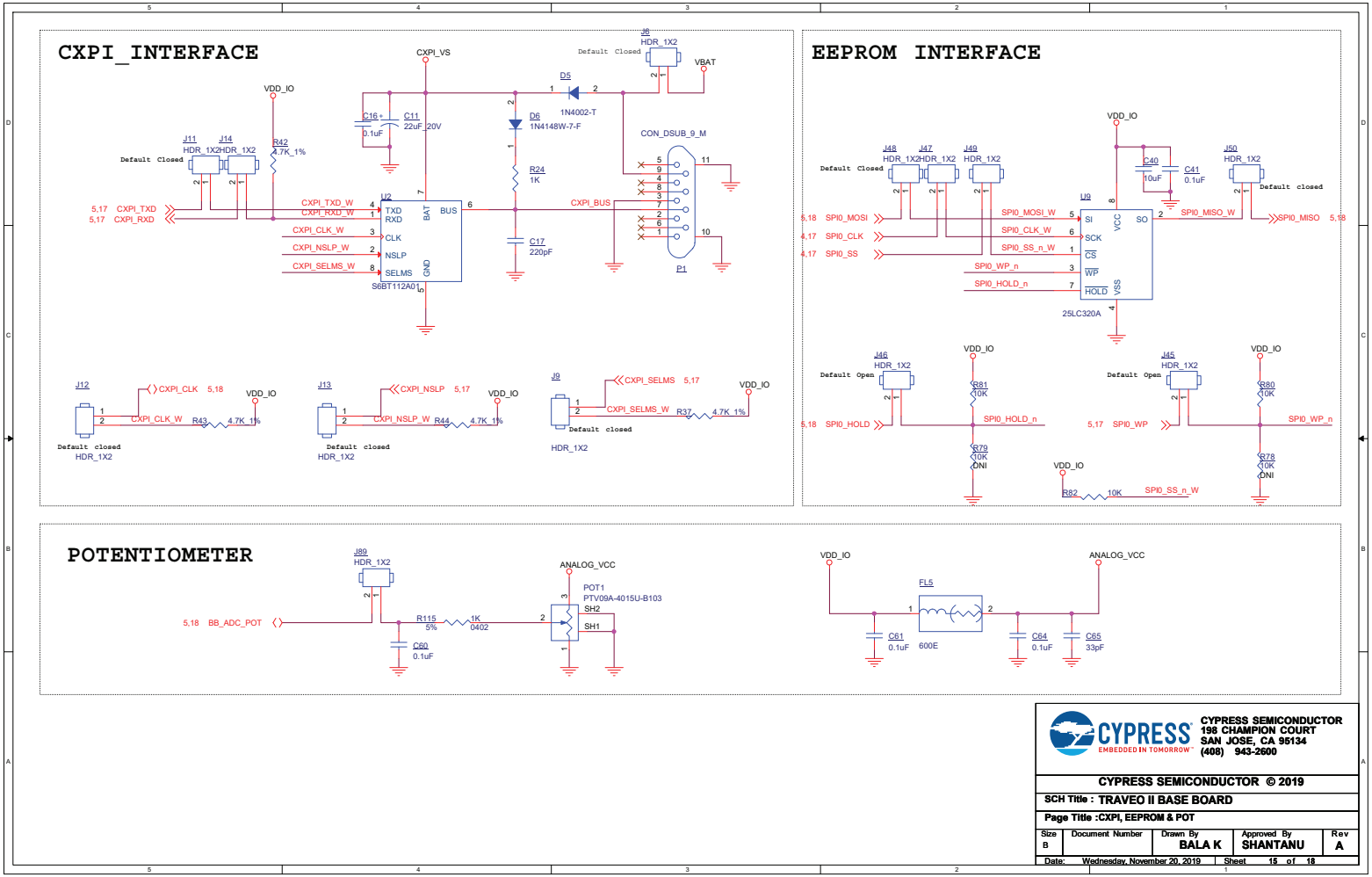

Figure C-14. USER_LED & PUSHBUTTON

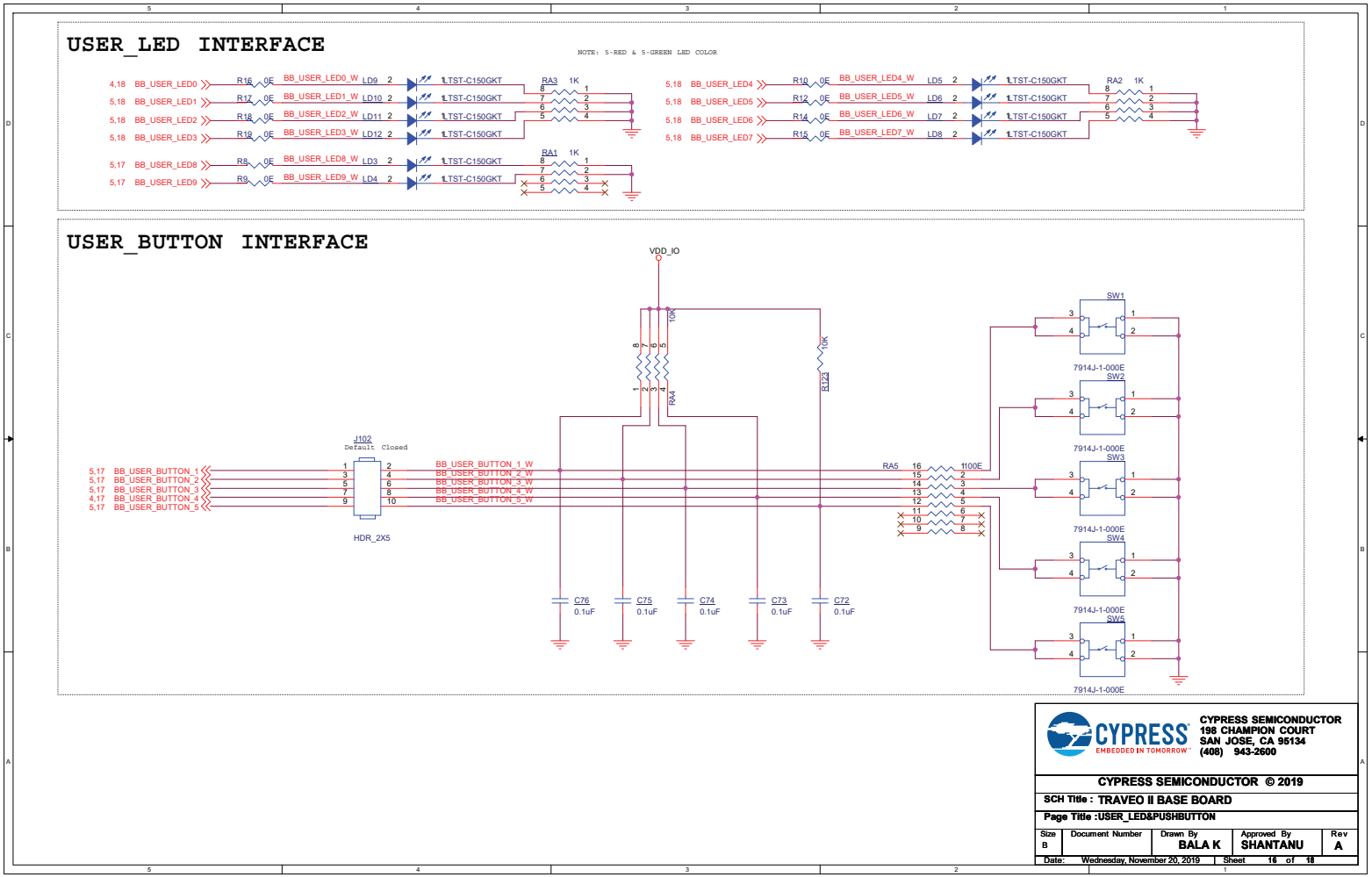

Figure C-15. Pin Header Section-01

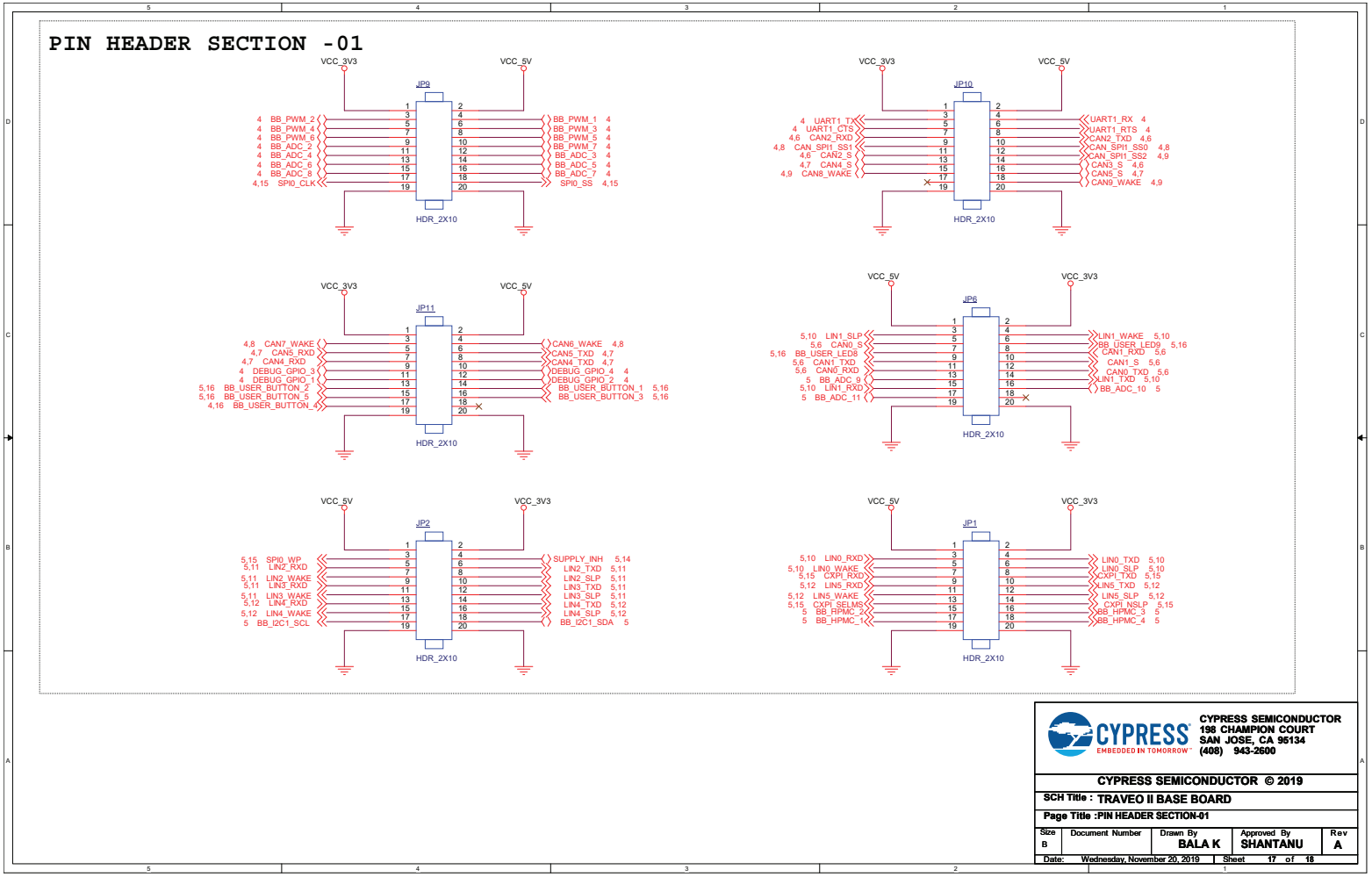

Figure C-16. Pin Header Section-02

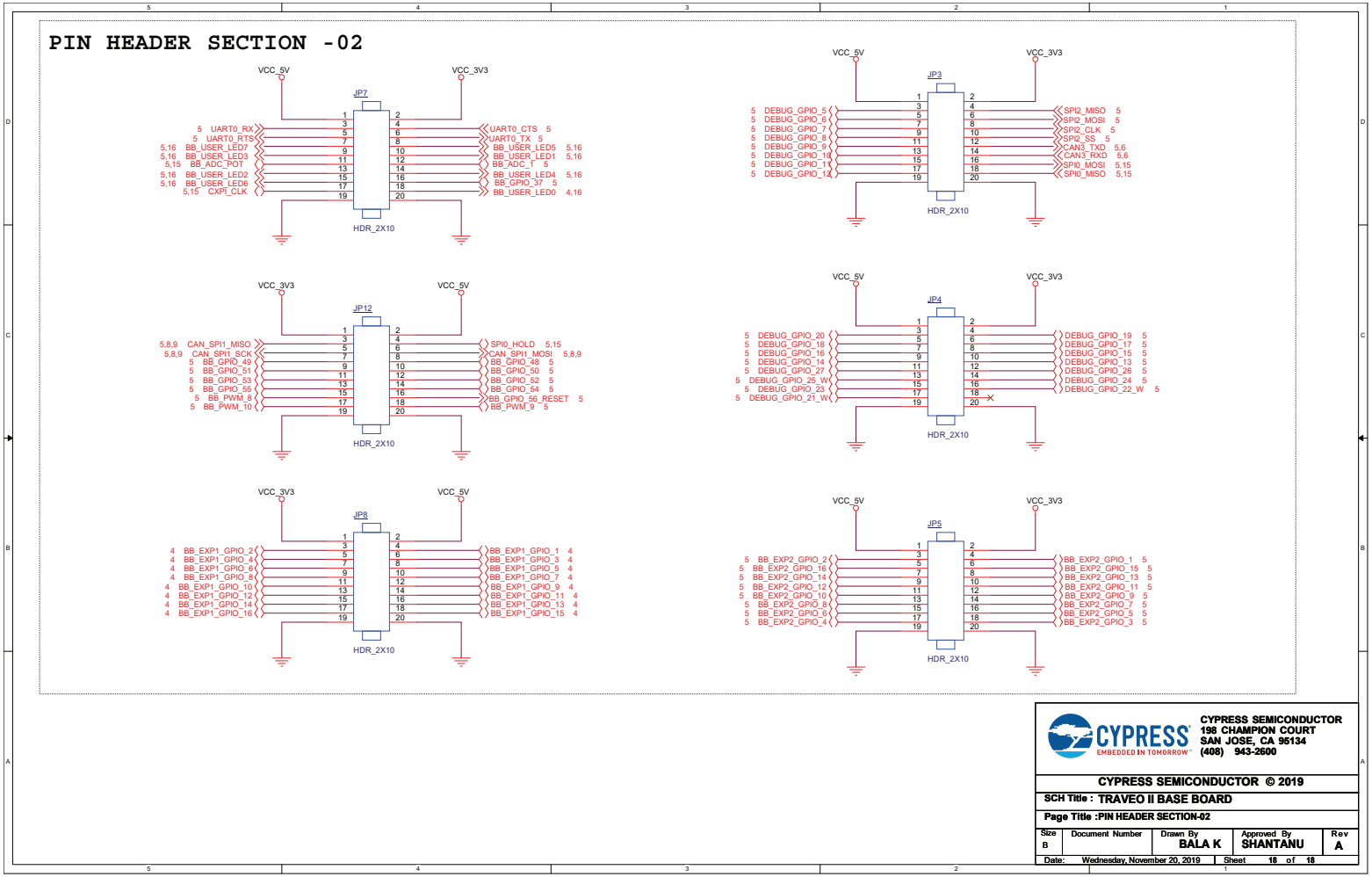

D. Component Assembly on Base Board

This appendix shows the top and bottom assembly of the PCB.

Figure D-1. Top Assembly of the PCB

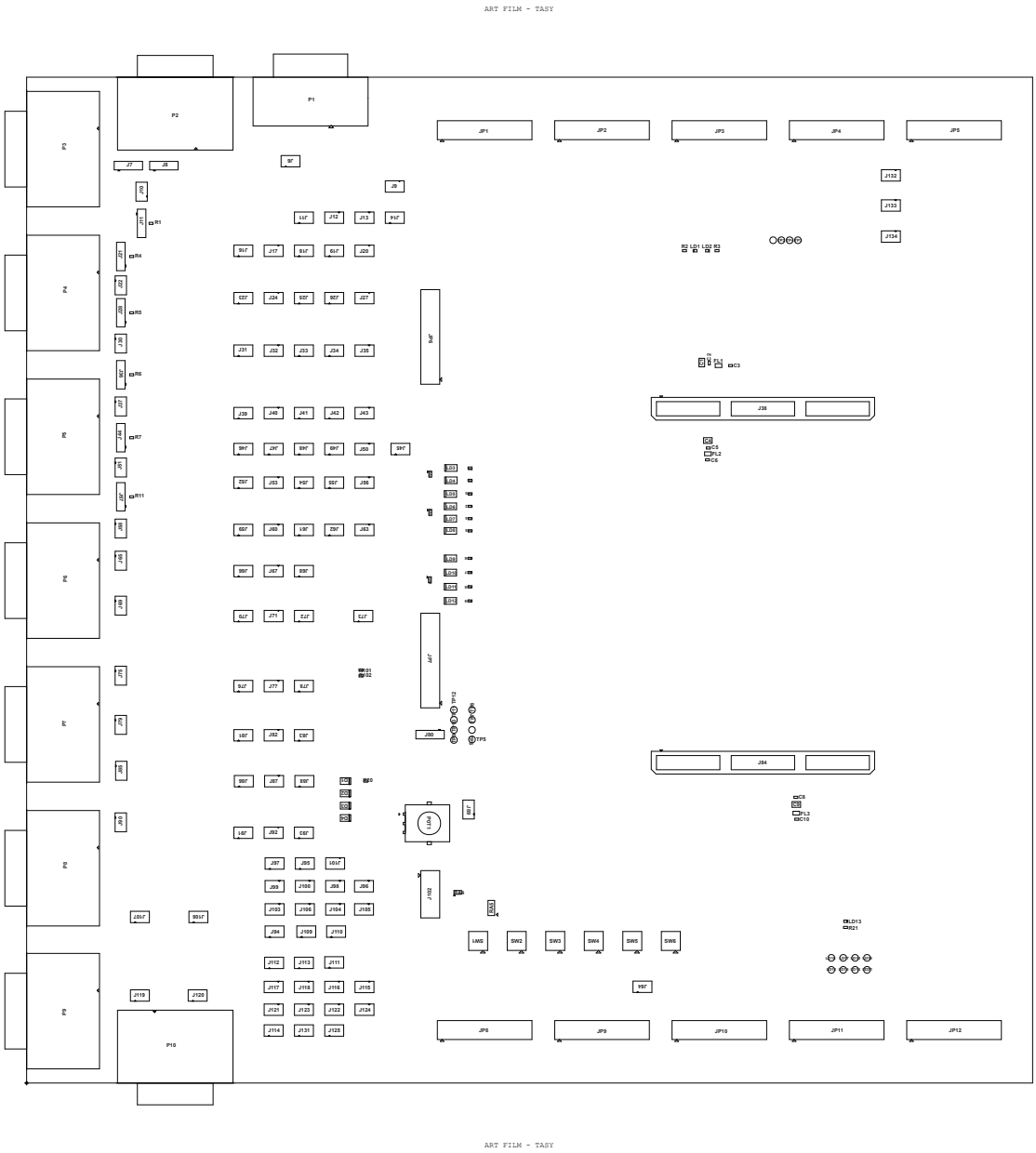

Figure D-2. Bottom Assembly of the PCB

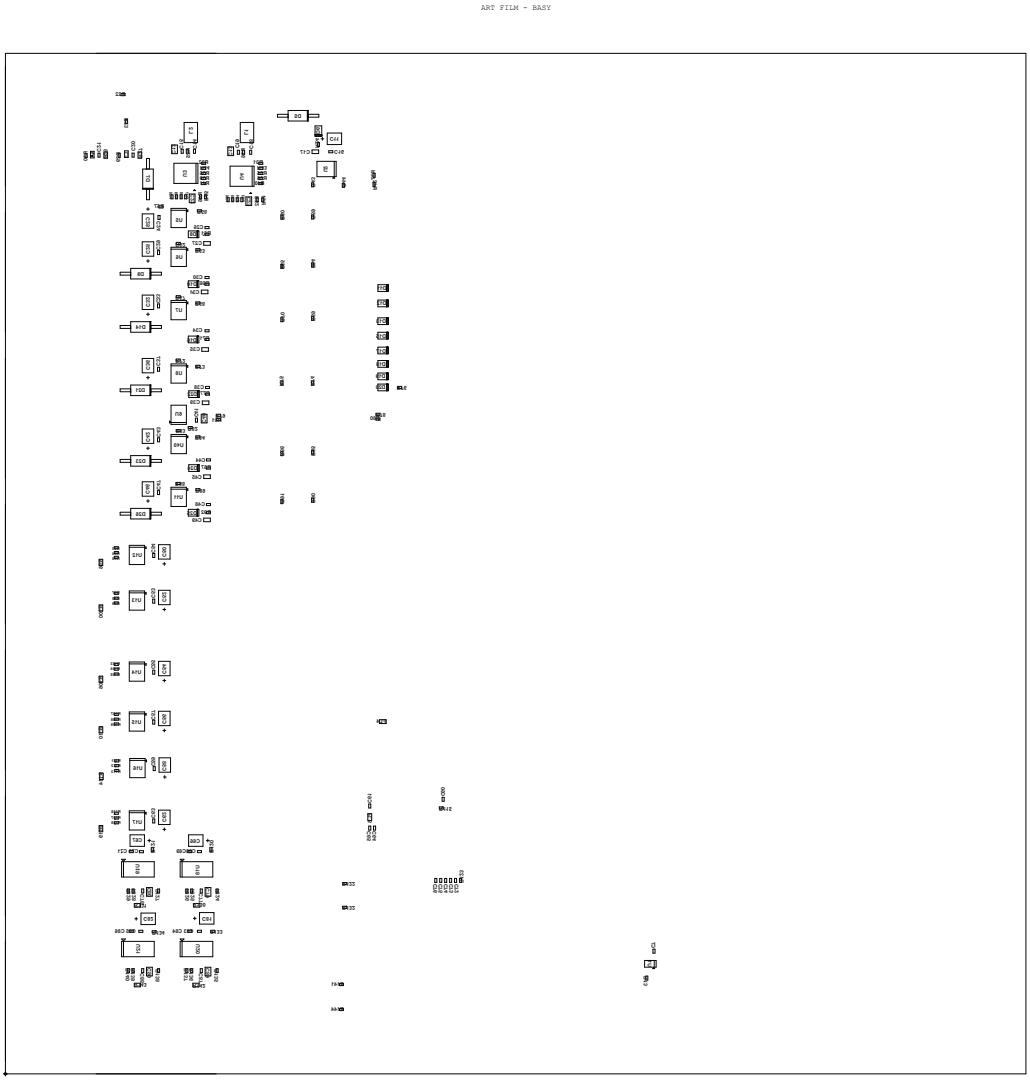

Revision History

Document Revision History

Document Title: CYTVII-B-E-2M-176-CPU Evaluation Board User Guide Document Number: 002-29049			
Revision	**ECN#**	**Issue Date**	**Description of Change**
**	6742894	12/09/2019	New user guide for TVII CPU board.