Please note that Cypress is an Infineon Technologies Company.

The document following this cover page is marked as “Cypress” document as this is the company that originally developed the product. Please note that Infineon will continue to offer the product to new and existing customers as part of the Infineon product portfolio.

Continuity of document content

The fact that Infineon offers the following product as part of the Infineon product portfolio does not lead to any changes to this document. Future revisions will occur when appropriate, and any changes will be set out on the document history page.

Continuity of ordering part numbers

Infineon continues to support existing part numbers. Please continue to use the ordering part numbers listed in the datasheet for ordering.

PRELIMINARY

CYBT-273063-02
CYBT-263064-02
CYBT-263065-02

EZ-BT Module

General Description

The CYBT-2X30XX-02 is a dual-mode Bluetooth® BR/EDR and Low Energy wireless module solution. The CYBT-2X30XX-02 includes an onboard crystal oscillator, passive components, PA/LNA, and the Cypress CYW20819 silicon device.

The CYBT-2X30XX-02 supports a number of peripheral functions (ADC, PWM), as well as multiple serial communication protocols (UART, SPI, I^2C, I^2S/PCM). The CYBT-2X30XX-02 includes a royalty-free stack compatible with Bluetooth 5.0 in a 12.0 × 16.61 × 1.85 mm module form-factor.

The CYBT-2X30XX-02 is offered in three certified versions CYBT-273063-02, CYBT-263064-02, and CYBT-263065-02. The CYBT-273063-02 includes an integrated trace antenna. The CYBT-263064-02 supports an external antenna through a RF solder pad output. The CYBT-263065-02 supports an external antenna via a u-FL connector. CYBT-2X30XX-02 includes onboard external power/low noise amplifier, qualified by Bluetooth SIG, and includes regulatory certification approval for FCC, ISED, MIC, and CE.

Module Description

- Module size: 12.5 mm × 19 mm × 1.85 mm
- Complies with Bluetooth Core Specification version 5.0 and includes support for BR, EDR 2/3 Mbps, eSCO, Bluetooth LE, LE 2 Mbps, as well as Bluetooth Mesh
  - QDID: TBD
  - Declaration ID: TBD
- Certified to FCC, ISED, MIC, and CE standards
- Certified up to +15 dBm (conducted) for FCC and ISED
- Certified up to +15 dBm (conducted) for MIC BT
- Certified up to +7.5 dBm (conducted) for MIC Bluetooth LE, CE Bluetooth LE, CE BT
- 256-KB on-chip Flash, 176-KB on-chip RAM
- Industrial temperature range: –30 °C to +85 °C
- Integrated Arm® Cortex®-M4 microprocessor core with floating point unit (FPU)

RF Characteristics

- Maximum TX output power: +15 dBm (conducted)
- Bluetooth LE RX Receive Sensitivity: –95.0 dBm

Power Consumption

- RX current consumption
  - Bluetooth LE silicon: 5.8 mA (radio only, 4 dBm)
  - 8TR8201: 8 mA Typ (PA/LNA only)
- TX current consumption
  - Bluetooth silicon: 5.9 mA (radio only)
  - 8TR8201: 75 mA Typ (PA/LNA only, +20 dBm Pout)
- Cypress CYW20819 silicon low power mode support
  - PDS: 16.5 µA with 176 KB RAM retention
  - ePDS: 8.7 µA
  - HIDOFF (wake on external or timed interrupt): 1.75 µA

Functional Capabilities

- Up to 20 GPIOs
- I^2C, I2S, UART, and PCM interfaces
- Two Quad-SPI interfaces
- Auxiliary ADC with up to 15 analog channels
- General-purpose timers and six PWMs
- Real-time clock (RTC) and watchdog timers (WDT)
- Bluetooth Basic Rate (BR) and Enhanced Data Rate (EDR) Support
- Bluetooth LE protocol stack supporting generic access profile (GAP) Central, Peripheral, Observer, or Broadcaster roles

Benefits

CYBT-2X30XX-02 is fully integrated and certified solution that provides all necessary components required to operate Bluetooth communication standards.

- Proven hardware design ready to use
- Ultra-flexible supermux I/O design allows maximum flexibility for GPIO function assignment
- Over-the-air update capable for development or field updates
- Bluetooth SIG qualified.
- ModusToolbox® provides an easy-to-use integrated design environment (IDE) to configure, develop, program, and test your Bluetooth application

More Information

Cypress provides a wealth of data at www.cypress.com to help you to select the right module for your design, and to help you to quickly and effectively integrate the module into your design.

References

- Overview: EZ-BLE/EZ-BT Module Portfolio, Module Roadmap
- Development Kits:
  - CYBT-273063-EVAL, CYBT-273063-02 Evaluation Board
  - CYBT-263065-EVAL, CYBT-263065-02 Evaluation Board
  - CYBT-213043-MESH, Mesh Evaluation Kit
  - CYW920819Q40EVB-01, Evaluation Kit for CYW20819 silicon device
- Test and Debug Tools:
  - CYSmart, Bluetooth® LE Test and Debug Tool (Windows)
  - CYSmart Mobile, Bluetooth® LE Test and Debug Tool (Android/iOS Mobile App)
- Knowledge Base Article
  - KBA97095 - EZ-BLE™ Module Placement
  - RF Regulatory Certifications for CYBT-2X30XX-02 EZ-BT WICED Modules (TBD)
  - KBA213976 - FAQ for Bluetooth LE and Regulatory Certifications with EZ-BLE modules
  - KBA210802 - Queries on Bluetooth LE Qualification and Declaration Processes
  - KBA218122 - 3D Model Files for EZ-BLE/EZ-BT Modules
  - KBA223428 - Programming an EZ-BT WICED Module
  - KBA225450 - Putting 2073x, 2070x, and 20719 Based Devices or Modules in HCI Mode

Development Environments

ModusToolbox Integrated Development Environment (IDE)

ModusToolbox simplifies development for IoT designers. It delivers easy-to-use tools and a familiar microcontroller (MCU) integrated development environment (IDE) for Windows®, macOS®, and Linux®. It provides a sophisticated environment for system setup, wireless connectivity libraries, power analysis, application-specific configurators for Bluetooth® Low Energy, CapSense®, as well as other peripherals.

In addition, code examples, documentation, technical support and community forums are available to help your IoT development process along. These tools and features enable an IoT designer to develop innovative IoT applications efficiently and with ease.

Technical Support

- Cypress Community: Whether you are a customer, partner, or a developer interested in the latest Cypress innovations, the Cypress Developer Community offers you a place to learn, share, and engage with both Cypress experts and other embedded engineers around the world.
- Frequently Asked Questions (FAQs): Learn more about our Bluetooth ecosystem.
- Visit our support page and create a technical support case or contact a local sales representatives. If you are in the United States, you can talk to our technical support team by calling our toll-free number: +1-800-541-4736. Select option 2 at the prompt.

Contents

Overview **4**
Functional Block Diagram 4
Module Description 4
Pad Connection Interface **6**
Recommended Host PCB Layout **7**
Module Connections **9**
Connections and Optional External Components **11**
Power Connections (VDD) 11
External Reset (XRES) 11
HCI UART Connections 11
External Component Recommendation 11
Antenna Matching Network Requirements 11
Critical Components List **13**
Antenna Design **13**
Qualified Antenna for CYBT-263064-02 and CYBT-263065-02 ..... **13**
Bluetooth Baseband Core **14**
Power Management Unit **15**
Integrated Radio Transceiver **16**
Transmitter Path 16
Receiver Path 16
Local Oscillator 16
Microcontroller Unit **17**
External Reset 17
32-kHz Crystal Oscillator 17
Power Modes 18
Firmware 18
Watchdog 18
Lockout Functionality 18
True Random Number Generator 18
Peripherals and Communication Interfaces **19**
I2C 19
HCI UART Interface 19
Peripheral UART Interface 19
Serial Peripheral Interface 19
ADC Port 20
GPIO Port 20
PWM 21
PDM Microphone 21
I2S Interface 22
PCM Interface 22
Electrical Characteristics **23**
Current Consumption 24
Silicon Core Buck Regulator 25
Digital LDO 25
RF LDO 26
Digital I/O Characteristics 27
ADC Characteristics 27
Chipset RF Specifications **29**
Timing and AC Characteristics **31**
UART Timing 31
SPI Timing 32
I2C Compatible Interface Timing 34
I2S Interface Timing 35
Environmental Specifications **37**
Environmental Compliance 37
RF Certification 37
Safety Certification 37
Environmental Conditions 37
ESD and EMI Protection 37
Regulatory Information **38**
FCC 38
ISED 39
European Declaration of Conformity 40
MIC Japan 40
Packaging **41**
Ordering Information **43**
Acronyms **44**
Document Conventions **44**
Units of Measure 44
Document History Page **45**
Sales, Solutions, and Legal Information **46**
Worldwide Sales and Design Support 46
Products 46
PSoC® Solutions 46
Cypress Developer Community 46
Technical Support 46

Overview

Functional Block Diagram

Figure 1 illustrates the CYBT-2X30XX-02 functional block diagram.

Figure 1. Functional Block Diagram

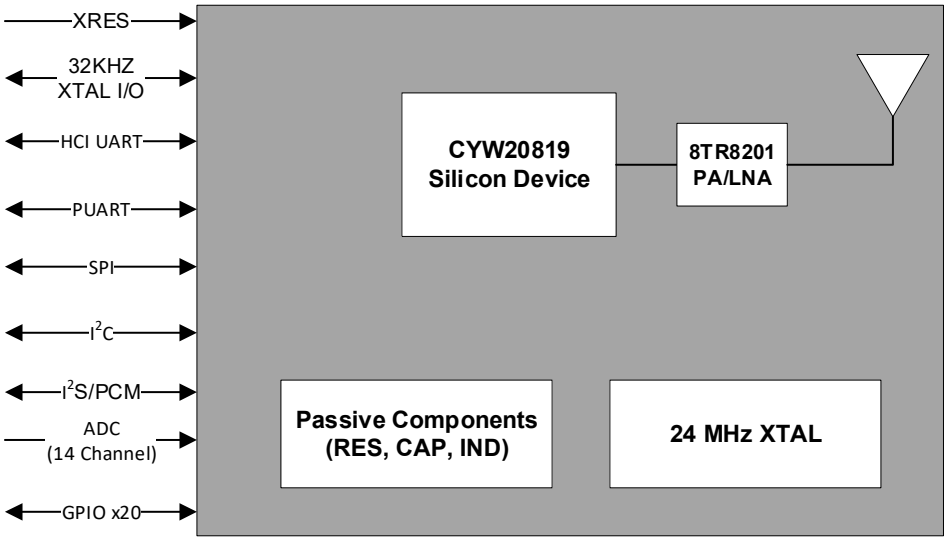

Note: General Purpose Input/Output pins shown in Figure 1 are configurable to any specified input or output function in the SuperMux table detailed in Table 5 in the Module Connections section.

Note: The total number of GPIOs available on the CYBT-2X30XX-02 is 20. Peripheral and/or Serial communication functions are implemented using these 20 GPIOs.

Module Description

The CYBT-2X30XX-02 module is a complete module designed to be soldered to the applications main board.

Module Dimensions and Drawing

Cypress reserves the right to select components from various vendors to achieve the Bluetooth module functionality. Such selections will still guarantee that all mechanical specifications and module certifications are maintained. The CYBT-2X30XX-02 will be held within the physical dimensions shown in the mechanical drawings in Figure 2 on page 5. All dimensions are in millimeters (mm).

Table 1. Module Design Dimensions

Dimension Item		Specification
Module dimensions	Length (X)	12.5 ± 0.15 mm
	Width (Y)	19 ± 0.15 mm
Antenna location dimensions	Length (X)	12.5 mm
	Width (Y)	4.5 mm
PCB thickness	Height (H)	0.50 ± 0.10 mm
Shield height	Height (H)	1.20 mm typical
Maximum component height	Height (H)	1.25 mm typical
Total module thickness (bottom of module to top of shield)	Height (H)	1.85 mm typical

See Figure 2 for the mechanical reference drawing for CYBT-2X30XX-02.

Figure 2. Module Mechanical Drawing

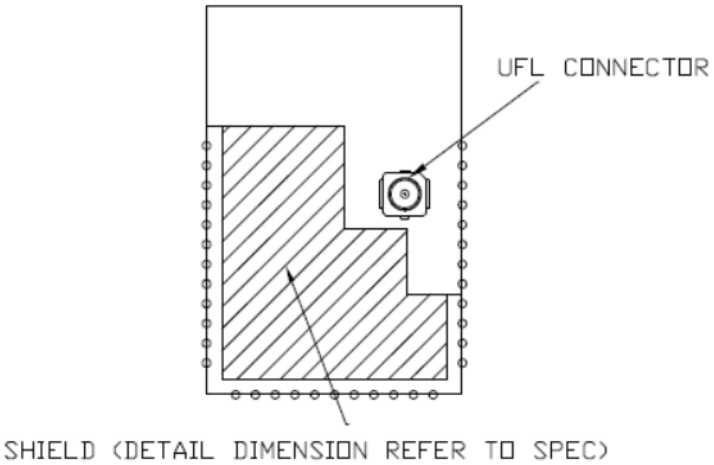

Top View (Seen from Top)

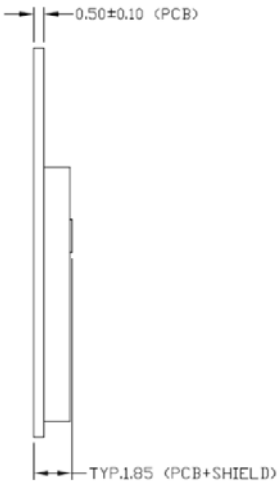

Side View

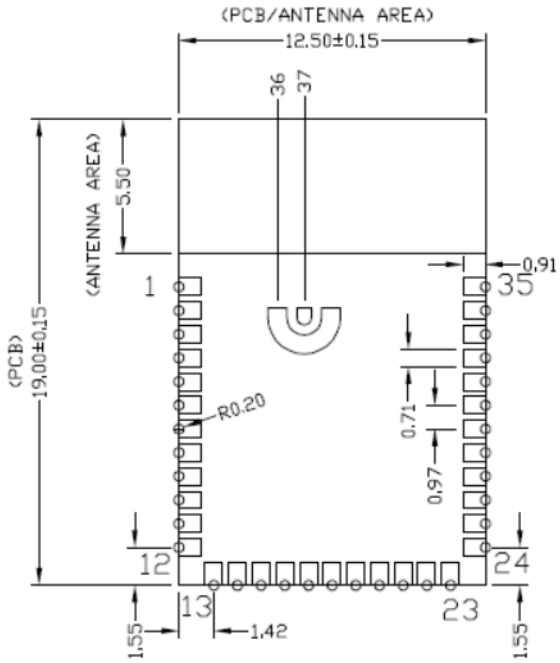

PAD1:GND	PAD21:XTALO_32K
PAD2:XRES	PAD22:GND
PAD3:P29	PAD23:P3
PAD4:P26	PAD24:P8
PAD5:P37	PAD25:P15
PAD6:P1	PAD26:P4
PAD7:P0	PAD27:P28
PAD8:P10	PAD28:UART_CTS_N
PAD9:P11	PAD29:HOST_WAKE
PAD10:P13	PAD30:UART_RXD
PAD11:P14	PAD31:UART_TXD
PAD12:P12	PAD32:DEV_WAKE
PAD13:GND	PAD33:UART_RTS_N
PAD14:P9	PAD34:VDD
PAD15:P17	PAD35:GND
PAD16:P5	PAD36:GDN-for 263064 only
PAD17:P6	PAD37:ANT-for 263064 only
PAD18:P2	
PAD19:GND	
PAD20:XTALI_32K	

Bottom View (Seen from Bottom)

Note

1. No metal should be located beneath or above the antenna area. Only bare PCB material should be located beneath the antenna area. For more information on the recommended host PCB layout, see Recommended Host PCB Layout on page 7.

Pad Connection Interface

As shown in the bottom view of Figure 2 on page 5, the CYBT-2X30XX-02 has 35 connections to a host board via solder pads (SP). Table 2 and Figure 3 detail the solder pad length, width, and pitch dimensions of the CYBT-2X30XX-02 module.

Table 2. Connection Description

Name	Connections	Connection Type	Pad Length Dimension	Pad Width Dimension	Pad Pitch
SP	35	Solder Pad	1.11 mm	0.71 mm	0.97 mm

Figure 3. Solder Pad Dimensions (Seen from Bottom)

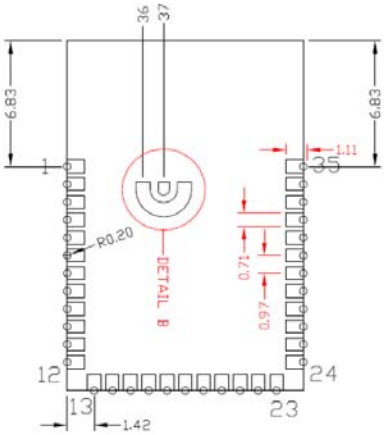

Solder Pad Connections (Seen from Bottom)

To maximize RF performance, the host layout should follow these recommendations:

1. Antenna Area Keepout: The host board directly below the antenna area of the Cypress module (see Figure 2 on page 5) must contain no ground or signal traces. This keep out area requirement applies to all layers of the host board.
2. Module Placement: The ideal placement of the Cypress Bluetooth module is in a corner of the host board with the PCB antenna located at the far corner. This placement minimizes the additional recommended keep out area stated in item 3 below. Refer to AN96841 for module placement best practices.
3. Optional Keepout: To maximize RF performance, the area immediately around the Cypress Bluetooth module PCB antenna may contain an additional keep out area, where there are no grounding or signal traces. The keep out area applies to all layers of the host board. The recommended dimensions of the host PCB keep out area are shown in Figure 4 (dimensions are in mm).

Figure 4. Optional Additional Host PCB Keep Out Area Around the CYBT-273063-02 PCB Antenna

Optional Host PCB Keep Out Area Around PCB Antenna (Seen from Bottom)

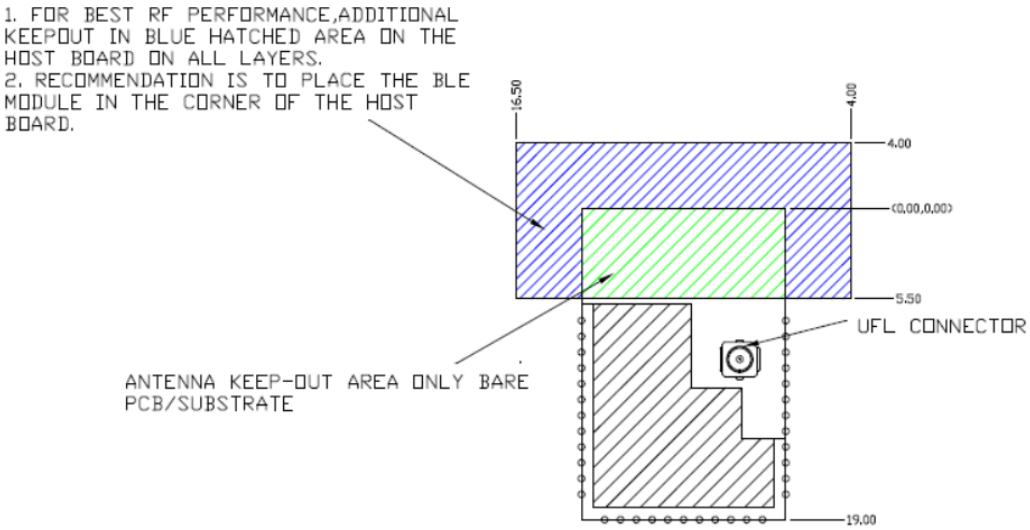

Recommended Host PCB Layout

Figure 5, Figure 6, Figure 7, and Table 3 provide details that can be used for the recommended host PCB layout pattern for the CYBT-2X30XX-02. Dimensions are in millimeters unless otherwise noted. Pad length of 1.27 mm (0.633 mm from center of the pad on either side) shown in Figure 7 is the minimum recommended host pad length. The host PCB layout pattern can be completed using either Figure 5, Figure 6, or Figure 7. It is not necessary to use all figures to complete the host PCB layout pattern.

Figure 5. CYBT-2X30XX-02 Host Layout (Dimensioned)

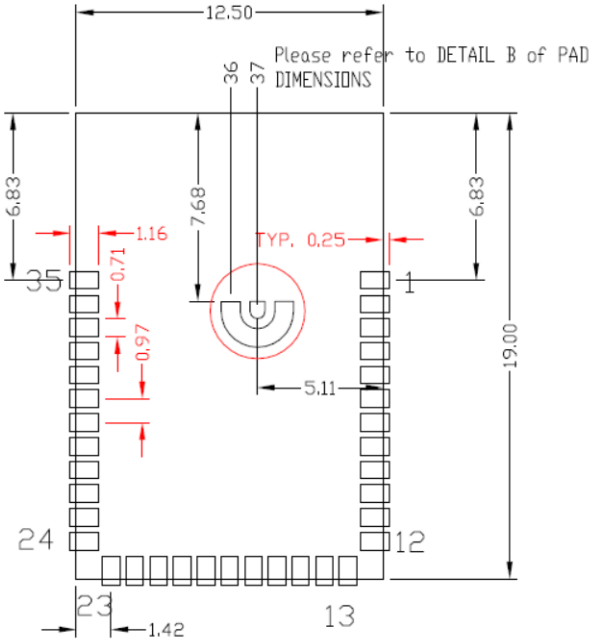

Top View (Seen on Host PCB)

Figure 6. CYBT-2X30XX-02 Host Layout (Relative to Origin)

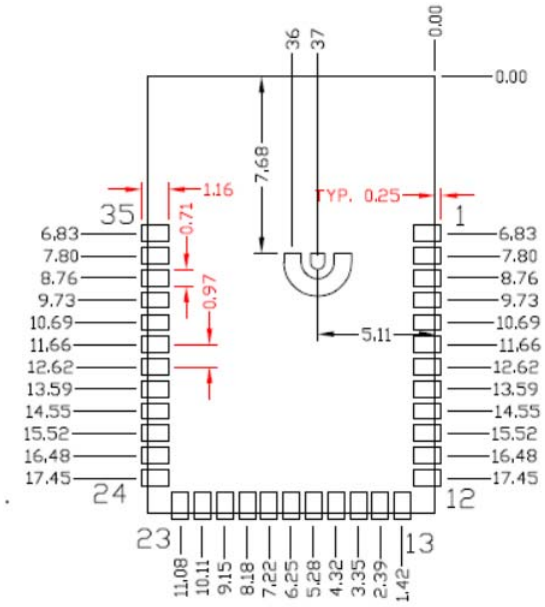

Top View (Seen on Host PCB)

Table 3 provides the center location for each solder pad on the CYBT-2X30XX-02. All dimensions are referenced to the center of the solder pad. Refer to Figure 7 for the location of each module solder pad.

Table 3. Module Solder Pad Location

Solder Pad (Center of Pad)	Location (X,Y) from Orign (mm)	Dimension from Orign (mils)
1	(0.33, 6.83)	(12.99, 268.90)
2	(0.33, 7.80)	(12.99, 307.09)
3	(0.33, 8.76)	(12.99, 344.88)
4	(0.33, 9.73)	(12.99, 383.07)
5	(0.33, 10.69)	(12.99, 420.87)
6	(0.33, 11.66)	(12.99, 459.05)
7	(0.33, 12.62)	(12.99, 496.85)
8	(0.33, 13.59)	(12.99, 535.04)
9	(0.33, 14.55)	(12.99, 572.83)
10	(0.33, 15.52)	(12.99, 611.02)
11	(0.33, 16.48)	(12.99, 648.82)
12	(0.33, 17.45)	(12.99, 687.01)
13	(1.42, 18.67)	(55.91, 735.04)
14	(2.39, 18.67)	(94.09, 735.04)
15	(3.35, 18.67)	(131.89, 735.04)
16	(4.32, 18.67)	(170.08, 735.04)
17	(5.28, 18.67)	(207.87, 735.04)
18	(6.25, 18.67)	(246.06, 735.04)
19	(7.22, 18.67)	(284.25, 735.04)
20	(8.18, 18.67)	(322.05, 735.04)
21	(9.15, 18.67)	(360.24, 735.04)
22	(10.11, 18.67)	(398.03, 735.04)
23	(11.08, 18.67)	(436.22, 735.04)
24	(12.17, 17.45)	(479.13, 687.01)
25	(12.17, 16.48)	(479.13, 648.82)
26	(12.17, 15.52)	(479.13, 611.02)
27	(12.17, 14.55)	(479.13, 572.83)
28	(12.17, 13.59)	(479.13, 535.04)
29	(12.17, 12.62)	(479.13, 496.85)
30	(12.17, 11.66)	(479.13, 459.05)
31	(12.17, 10.69)	(479.13, 420.87)
32	(12.17, 9.73)	(479.13, 383.07)
33	(12.17, 8.76)	(479.13, 344.88)
34	(12.17, 7.80)	(479.13, 307.09)
35	(12.17, 6.83)	(479.13, 268.90)

Figure 7. Solder Pad Reference Location

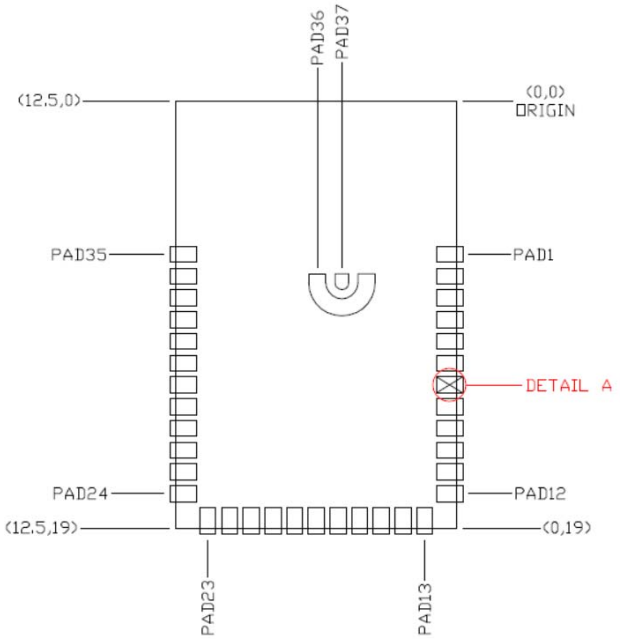

Top View (Seen on Host PCB)

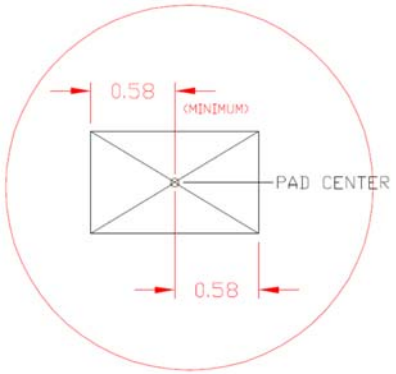

Module Connections

Table 4 details the solder pad connection definitions and available functions for each connection pad. The GPIO connections available on the CYBT-2X30XX-02 can be configured to any of the input or output functions listed in Table 5. Table 4 specifies any function that is required to be used on a specific solder pad, and also identifies SuperMux capable GPIOs that can be configured using the ModusToolbox device configurator.

Table 4. CYBT-2X30XX-02 Solder Pad Connection Definitions

Pad	Pad Name	Silicon Pin Name	XTALI/O	ADC	GPIO	SuperMux Capable[2]
1	GND	GND	Ground			
2	XRES	RST_N	External Reset (Active Low)			
3	P29	P29	-	IN10	✓	✓ see Table 5
4	P26	P26	-	-	✓	✓ see Table 5
5	P37	P37	-	IN2	✓	✓ see Table 5
6	P1	P1	-	IN28	✓	✓ see Table 5
7	P0	P0	-	IN29	✓	✓ see Table 5
8	P10	P10	-	IN25	✓	✓ see Table 5
9	P11	P11	-	IN24	✓	✓ see Table 5
10	P13	P13	-	IN22	✓	✓ see Table 5
11	P14	P14	-	IN21	✓	✓ see Table 5
12	P12	P12	-	IN23	✓	✓ see Table 5
13	GND	GND	Ground			
14	P9	P9	-	IN26	✓	✓ see Table 5
15	P17	P17	-	IN18	✓	✓ see Table 5
16	P5	P5	-	-	✓	✓ see Table 5
17	P6	P6	-	-	✓	✓ see Table 5
18	P2	P2	-	-	✓	✓, see Table 5
19	GND	GND	Ground			
20	XTALI_32K	XTALI_32K	External Oscillator Input (32KHz)	-	-	-
21	XTALO_32K	XTALO_32K	External Oscillator Output (32KHz)	-	-	-
22	GND	GND	Ground			
23	P3	P3	-	-	✓	✓ see Table 5
24	P8	P8	-	IN27	✓	✓ see Table 5
25	P15	P15	-	IN20	✓	✓ see Table 5
26	P4	P4	-	-	✓	✓ see Table 5
27	P28	P28	-	IN11	✓	✓ see Table 5
28	UART_CTS_N	UART_CTS_N	UART (HCI UART) Clear To Send Input Only			
29	HOST_WAKE	HOST_WAKE	A signal from the CYBT-2X30XX-02 module to the host indicating that the Bluetooth device requires attention			
30	UART_RXD	UART_RXD	UART (HCI UART) Receive Data Only			
31	UART_TXD	UART_TXD	UART (HCI UART) Transmit Data Only			
32	DEV_WAKE	DEV_WAKE	A signal from the host to the CYBT-2X30XX-02 module indicating that the host requires attention.			
33	UART_RTS_N	UART_RTS_N	UART (HCI UART) Request To Send Output Only			
34	VDD	VDDIO	Power Supply Input (1.8V ~ 3.3V)			
35	GND	GND	Ground			

Note

2. The CYBT-2X30XX-02 can configure GPIO connections to any Input/Output function described in Table 5 using the ModusToolbox Device Configurator.

Table 5 details the available Input and Output functions that are configurable to any solder pad in Table 4 that are marked as SuperMux capable.

Table 5. GPIO SuperMux Input and Output Functions

Function	Input or Output	Function Type	GPIOs Required	Function Connection Description
SPI 1	Input/Output	Serial Communication (Master or Slave)	4 ~ 7	SPI 1 Clock
				SPI 1 Chip Select
				SPI 1 MOSI
				SPI 1 MISO
				SPI 1 I/O 2 (Quad SPI)
				SPI 1 I/O 3 (Quad SPI)
				SPI 1 Interrupt
SPI 2	Input/Output	Serial Communication (Master or Slave)	4 ~ 7	SPI 2 Clock
				SPI 2 Chip Select
				SPI 2 MOSI
				SPI 2 MISO
				SPI 2 I/O 2 (Quad SPI)
				SPI 2 I/O 3 (Quad SPI)
				SPI 2 Interrupt
PUART	Input	Serial Communication Input	4	Peripheral UART RX
				Peripheral UART CTS
	Output	Serial Communication Output		Peripheral UART TX
				Peripheral UART RTS
I^2C	Input/Output	Serial Communication (Master or Slave)	2	I2C Clock
				I2C Data
PCM In	Input	Audio Input Communication	3	PCM Input
				PCM Clock
				PCM Sync
PCM Out	Output	Audio Output Communication	3	PCM Output
				PCM Clock
				PCM Sync
I^2S In	Input	Audio Input Communication	3	I2S DI, Data Input
				I2S WS, Word Select
				I2S Clock
I^2S Out	Output	Audio Output Communication	3	I2S DO, Data Output
				I2S WS, Word Select
				I2S Clock
PDM	Input	Microphone	1 ~ 2	PDM Input Channel 1
				PDM Input Channel 2
PWM	Output	Pulse Width Modulator	1 ~ 6	PWM Channel 0
				PWM Channel 1
				PWM Channel 2
				PWM Channel 3
				PWM Channel 4
				PWM Channel 5

Connections and Optional External Components

Power Connections (VDD)

The CYBT-2X30XX-02 contains one power supply connection, VDD. VDD accepts a supply input of 1.8 V to 3.3 V. Table 13 provides this specification. The maximum power supply ripple for this power connection is 100 mV, as shown in Table 13.

External Reset (XRES)

The CYBT-2X30XX-02 has an integrated power-on reset circuit which completely resets all circuits to a known power-on state. This action can also be invoked by an external reset signal, forcing it into a power-on reset state. XRES is an active-low input signal on the CYBT-2X30XX-02 module (solder pad 2). The CYBT-2X30XX-02 does not require external pull-up resistors on the XRES input. Refer to Figure 11 on page 17 for Power On and XRES operation and timing requirements during power on events.

HCI UART Connections

The recommendations in this section apply to the HCI UART (Solder Pads 28, 30, 31, and 33). For full UART functionality, all UART signals must be connected to the Host device (CTS must be pulled high when power-on/reset). If full UART functionality is not being used, and only UART RXD and TXD are desired or capable, then the following connection considerations should be followed for UART RTS and CTS:

- UART RTS: Must be left floating.
- UART CTS: Must be pulled high when power-on/reset and be pulled low after application startup to bypass flow control and ensure that continuous data transfers are made from the host to the module.

External Component Recommendation

Power Supply Circuitry

It is not required to place any power supply decoupling or noise reduction circuitry on the host PCB. If desired, an external ferrite bead between the supply and the module connection can be included. The ferrite bead should be positioned as close as possible to the module pad connection.

If used, the recommended ferrite bead value is 330 Ω, 100 MHz. (Murata BLM21PG331SN1D).

Antenna Matching Network Requirements

The CYBT-263064-02 module requires ANT and GND connections to an external antenna via the RF pad connections on the module (Pads 36 and 37). In order to optimize RF performance, an Antenna Matching Network (AMN) is required to be placed between the ANT connection (Pad 37) and the antenna used in the final design. Figure 8 details the recommended Pi topology circuit footprint to use for the Antenna Matching Network.

Figure 8. Recommended Antenna Matching Network for CYBT-263064-02 Module

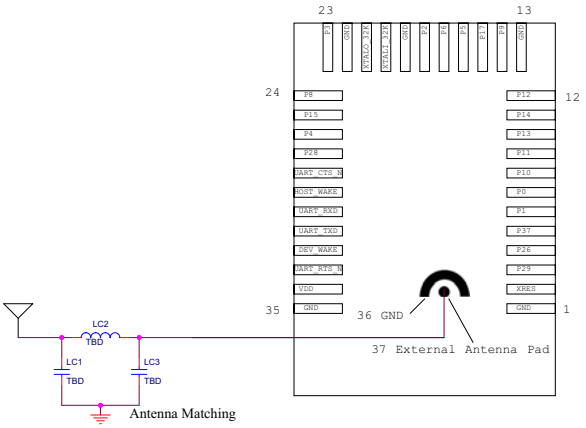

The design guidelines that should be followed when completing the Antenna Matching Network are as follows:

- The AMN should be placed close to the antenna on the main board.
- Routing to the AMN from the ANT pad on the module must be controlled to an impedance of 50 W.

The final AMN circuit may contain only a single component, or all three components shown above. The final number and type of components will be determined based on the actual design of the system, and the final values for each component can be determined through tuning the AMN. For details on how to properly tune an AMN, please refer to Application Note AN91445.

Figure 9 illustrates the CYBT-2X30XX-02 schematic.

Figure 9. CYBT-2X30XX-02 Schematic Diagram

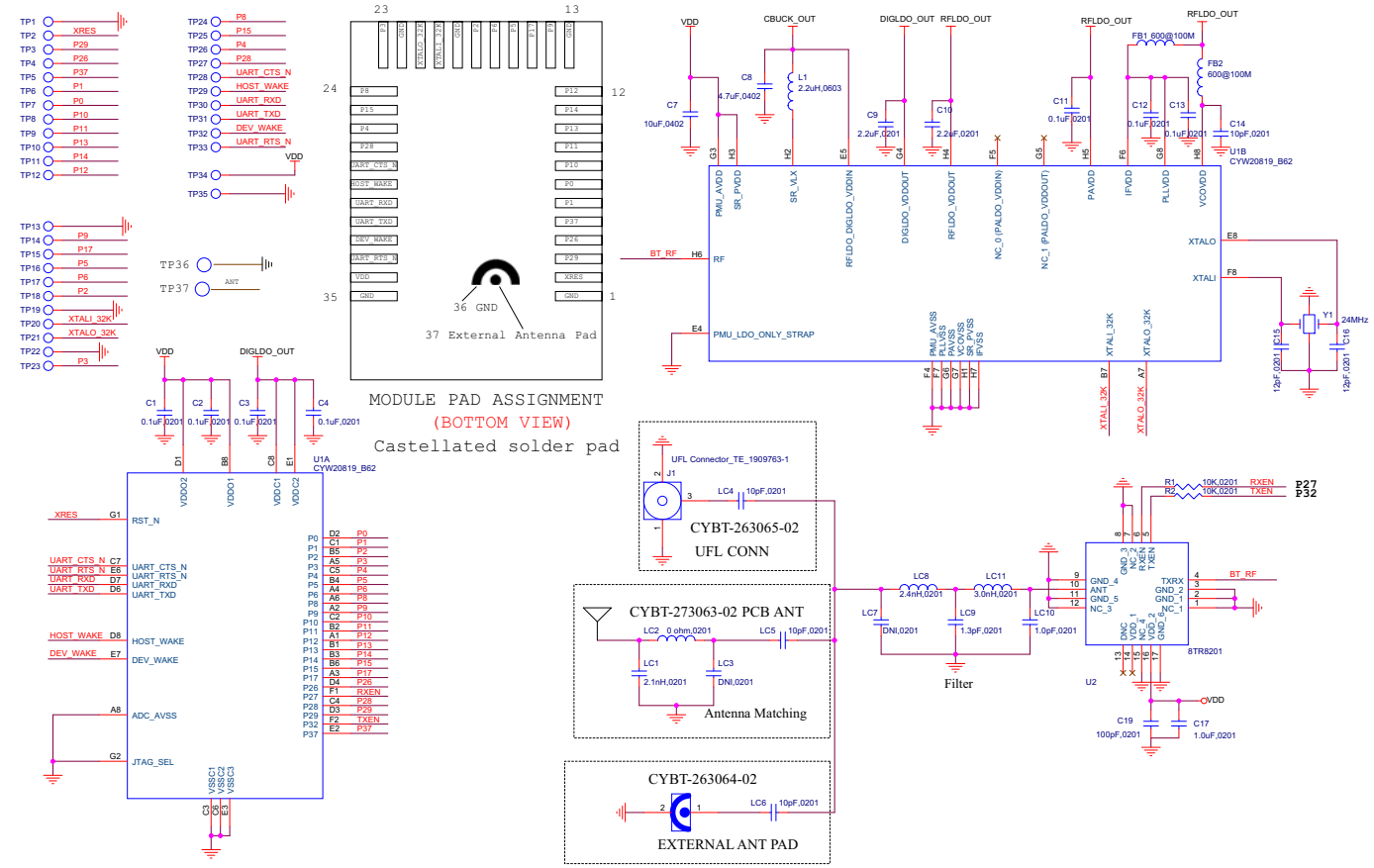

Critical Components List

Table 6 details the critical components used in the CYBT-2X30XX-02 module.

Table 6. Critical Component List

Component	Reference Designator	Description
Silicon	U1	62-pin FBGA Bluetooth Silicon Device - CYW20819
Crystal	Y1	24.000 MHz, 12PF
PA/LNA	U2	PA/LNA, +23 dBm maximum boost

Antenna Design

Table 7 details the PCB trace antenna used in the CYBT-273063-02 module.

Table 7. PCB Antenna Specifications

Item	Description
Frequency Range	2400–2500 MHz
Peak Gain	0.7 dBi typical
Return Loss	10 dB minimum

Qualified Antenna for CYBT-263064-02 and CYBT-263065-02

The CYBT-263064-02 and CYBT-263065-02 module has been designed to work with a standard 2.0 dBi dipole antenna. Any antenna of equivalent or less gain can be used without additional application and testing for FCC regulations. Table 8 details the approved antennas for the CYBT-263064-02 and CYBT-263065-02 module for Bluetooth operation.

Table 8. Qualified Antennas

Manufacturer	Part Number	Gain
Pulse	W1010	2.0 dBi peak

Bluetooth Baseband Core

The Bluetooth Baseband Core (BBC) implements all time-critical functions required for high-performance Bluetooth operation. The BBC manages the buffering, segmentation, and routing of data for all connections. It prioritizes and schedules all RX/TX activities including adv, paging, scanning, and servicing of connections. In addition to these functions, it independently handles the host controller interface (HCI) including all commands, events, and data flowing over HCI. The core also handles symbol timing, forward error correction (FEC), header error control (HEC), cyclic redundancy check (CRC), authentication, data encryption/decryption, and data whitening/dewhitening.

Table 9. Bluetooth Features

Bluetooth 1.0	Bluetooth 1.2	Bluetooth 2.0
Basic Rate	Interlaced Scans	EDR 2 Mbps and 3 Mbps
SCO	Adaptive Frequency Hopping	–
Paging and Inquiry	eSCO	–
Page and Inquiry Scan	–	–
Sniff	–	–
Bluetooth 2.1	**Bluetooth 3.0**	**Bluetooth 4.0**
Secure Simple Pairing	Unicast Connectionless Data	Bluetooth Low Energy
Enhanced Inquiry Response	Enhanced Power Control	–
Sniff Subrating	eSCO	–
Bluetooth 4.1	**Bluetooth 4.2**	**Bluetooth 5.0**
Low Duty Cycle Advertising	Data Packet Length Extension	LE 2 Mbps
Dual Mode	LE Secure Connection	Slot Availability Mask
LE Link Layer Topology	Link Layer Privacy	High Duty Cycle Advertising

Power Management Unit

Figure 10 shows the CYW20819 power management unit (PMU) block diagram. The CYW20819 includes an integrated buck regulator, a digital LDO for the digital core, and an RF LDO for the Radio. The PMU also includes a brownout detector which places the part in shutdown when input voltage is below a certain threshold.

Figure 10. Default Usage Mode

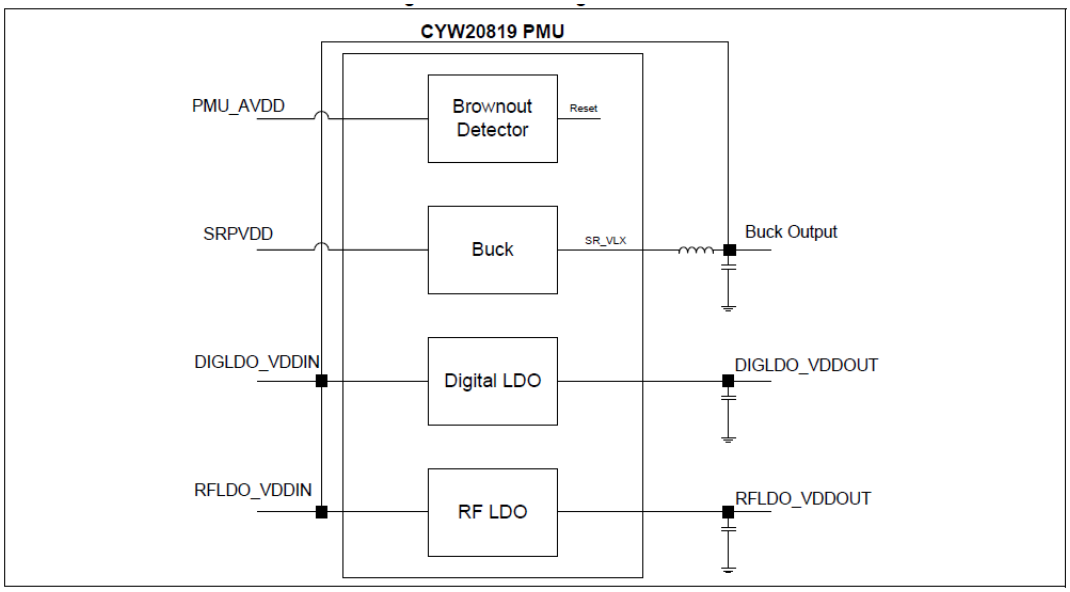

Integrated Radio Transceiver

The CYBT-2X30XX-02 has an integrated radio transceiver that has been designed to provide low power operation in the globally available 2.4 GHz unlicensed ISM band.

Transmitter Path

CYBT-2X30XX-02 features a fully integrated transmitter. The baseband transmit data is GFSK modulated in the 2.4 GHz ISM band.

Digital Modulator

The digital modulator performs the data modulation and filtering required for the GFSK signal. The fully digital modulator minimizes any frequency drift or anomalies in the modulation characteristics of the transmitted signal.

Power Amplifier

The CYBT-2X30XX-02 has an integrated power amplifier (PA) that can transmit up to +20 dBm for class 1 operation.

Receiver Path

The receiver path uses a low IF scheme to downconvert the received signal for demodulation in the digital demodulator and bit synchronizer. The receiver path provides a high degree of linearity, and an extended dynamic range to ensure reliable operation in the noisy 2.4 GHz ISM band. The front-end topology, which has built-in out-of-band attenuation, enables the CYBT-2X30XX-02 to be used in most applications without off-chip filtering.

Digital Demodulator and Bit Synchronizer

The digital demodulator and bit synchronizer take the low-IF received signal and perform an optimal frequency tracking and bit synchronization algorithm.

Receiver Signal Strength Indicator

The radio portion of the CYBT-2X30XX-02 provides a receiver signal strength indicator (RSSI) to the baseband. This enables the controller to take part in a Bluetooth power-controlled link by providing a metric of its own receiver signal strength to determine whether the transmitter should increase or decrease its output power.

Local Oscillator

The local oscillator (LO) provides fast frequency hopping (1600 hops/second) across the band. The CYBT-2X30XX-02 uses an internal loop filter.

Microcontroller Unit

The CYBT-2X30XX-02 includes a Cortex-M4 processor with 1 MB of program ROM, 176 KB of RAM, and 256 KB of flash. The CM4 has a maximum speed of 96 MHz. The 256 KB of flash is supported by an 8 KB cache allowing direct code execution from flash at near maximum speed and low power consumption.

The CM4 runs all the BT layers as well as application code. The ROM includes LMAC, HCI, L2CAP, GATT, as well as other stack layers freeing up most of the flash for application usage. A standard serial wire debug (SWD) interface provides debugging support.

External Reset

Figure 11 shows power on and reset timing of the CYBT-2X30XX-02. After VBAT is applied and reset is inactive, the internal buck turns on, followed by the RF and Digital LDOs. Once the LDO outputs have stabilized, the PMU allows the digital core to come out of reset. As shown in the figure, external reset can be applied at any time subsequent to power up.

Figure 11. Reset Timing

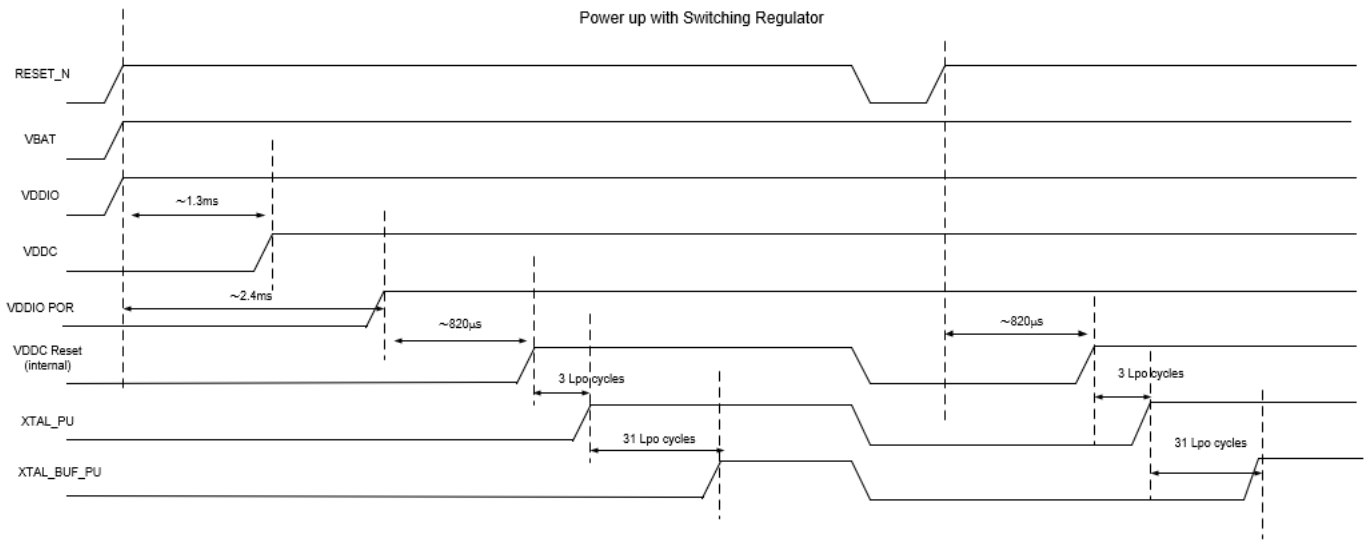

32-kHz Crystal Oscillator

The CYBT-2X30XX-02 includes connections for an external 32-kHz oscillator to provide accurate timing during low power operations. Figure 12 shows the 32-kHz XTAL oscillator with external components and Table 10 lists the oscillator characteristics. This oscillator can be operated with a 32 kHz or 32.768-kHz crystal oscillator or be driven with a clock input at similar frequency. The XTAL must have an accuracy of ±250 ppm or better per the BT spec over temperature and including aging. The external component values should be: R1 = 10 MΩ and C1 = C2 = 6 pF. The values of C1 and C2 are used to fine-tune the oscillator. A XTAL meeting the C1 and C2 values should be used.

Figure 12. 32 kHz Oscillator Block Diagram

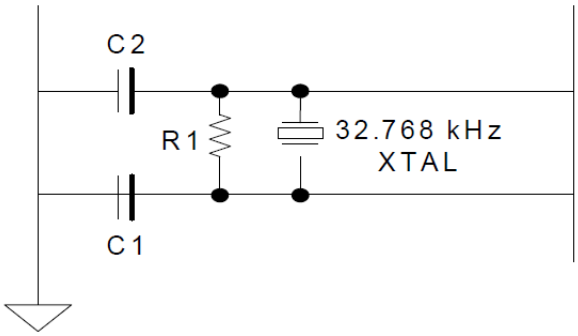

Table 10. XTAL Oscillator Characteristics

Parameter	Symbol	Conditions	Minimum	Typical	Maximum	Unit
Output frequency	F_{oscout}	–	–	32.768	–	kHz
Frequency tolerance	–	Over temperature and aging	–	–	250	ppm
XTAL drive level	P_{drv}	For crystal selection	–	–	0.5	µW
XTAL series resistance	R_{series}	For crystal selection	–	–	70	kΩ
XTAL shunt capacitance	C_{shunt}	For crystal selection	–	–	2.2	pF
Load capacitance	C_l	For crystal selection	–	6	–	pF

Power Modes

The CYBT-2X30XX-02 support the following HW power modes are supported:

- **Active mode** - Normal operating mode in which all peripherals are available and the CPU is active.
- **Idle mode** - CPU is paused.
- **Sleep mode** - All system clocks are idle except for the LPO. The device can wake up either after a programmed period of time has expired or if an external event is received via one of the GPIOs. In Sleep mode, the CPU is in WFI (wait for interrupt) and the HCLK is not running. The PMU determines if the other clocks can be turned off and does accordingly. The state of the device is retained, the internal LDOs run at a lower voltage (voltage is managed by the PMU), and SRAM is retained.
- **Power Down Sleep (PDS) mode** - Radio powered down and digital core mostly powered down except for RAM, registers, and some core logic. CYBT-2X30XX-02 can wake up either after a programmed period of time has expired or if an external event is received via one of the GPIO.
- **Extended PDS (ePDS)** - This is an extension of PDS Mode. In this mode, only the main RAM and ePDS control circuitry retains power. As in other modes, the CYBT-2X30XX-02 can wake up either after a programmed period or upon receiving an external event.
- **HID-OFF (Deep Sleep) mode** - Core, radio, and regulators powered down. Only the GPIO domain is powered. In this mode, the CYBT-2X30XX-02 can be woken up either by an external event on one of the GPIOs or after a programmed period of time has expired. The lowest power option for HID-Off mode is to wake by external event, allowing all clocking sources to remain off. If a timed wake HID-Off state is desired, this is accomplished by powering the external or internal LPO. Current consumption will increase slightly in timed wake HID-Off mode to account for the LPO power. After wakeup, the part will go through full FW initialization although it will retain enough information to determine that it came out of HID-Off and the event that caused the wake up.

Transition between power modes is handled by the on-chip firmware with host/application involvement. In general, ePDS is the most power-efficient mode for active use cases. HID-Off is preferable for non-connectable beacon use cases (long advertisement intervals).

Firmware

The CYBT-2X30XX-02 ROM firmware runs on a real time operating system and handles the programming and configuration of all on-chip hardware functions as well as the BT/LE baseband, LM, HCI, GATT, ATT, L2CAP, and SDP layers. The ROM also includes drivers for on-chip peripherals as well as handling on-chip power management functions including transitions between different power modes. The ROM also supports OTA firmware update.

The CYBT-2X30XX-02 is fully supported by the Cypress ModusToolbox IDE. ModusToolbox releases provide latest ROM patches, drivers, and sample applications allowing customized applications using the CYBT-2X30XX-02 to be built quickly and efficiently.

Watchdog

CYBT-2X30XX-02 includes an onboard watchdog with a period of approximately 4 seconds. The watchdog generates an interrupt to the Firmware after 2 seconds of inactivity and resets the device after 4 seconds.

Lockout Functionality

The CYBT-2X30XX-02 powers up with SWD access to flash and RAM is disabled. After reset, FW checks OCF for the presence of a security lockout field. If present, FW leaves SWD Flash and RAM access disabled and also blocks any HCI commands from reading the raw contents of the RAM or Flash. This provides an effective way of protection against tampering, dumping, probing, or reverse engineering of the user application stored in the on-chip flash. The only firmware upgrade path in this scenario is secure over-the-air (OTA) update. The security field can be programmed in the factory after all programming and testing has been done.

True Random Number Generator

The CYBT-2X30XX-02 includes a hardware TRNG (True Random Number Generator). Applications can access the random number generator via firmware APIs.

Peripherals and Communication Interfaces

I^2C

The CYBT-2X30XX-02 provides a 2-pin I^2C master/slave interface to communicate with I^2C compatible peripherals. The following transfer clock rates are supported:

- 100 kHz
- 400 kHz
- 800 kHz (Not a standard I^2C-compatible speed)
- 1 MHz (Compatibility with high-speed I^2C-compatible devices is not guaranteed)

The I^2C compatible master is capable for doing read, write, write followed by read, and read followed by write operations where read/write can be up to 64 bytes.

SCL and SDA lines can be routed to any of the configurable GPIOs (as indicated in Table 4), allowing for flexible system configuration. When used as SCL/SDA the GPIOs go into open drain mode and require an external pull-up for proper operation. I^2C does not support multimaster capability or flexible wait-state insertion by either master or slave devices.

HCI UART Interface

CYBT-2X30XX-02 includes a UART interface for factory programming as well as when operating as a BT HCI device in a system with an external host. The UART physical interface is a standard, 4-wire interface (RX, TX, RTS, and CTS) with adjustable baud rates from 115200 bps to 3 Mbps. Typical rates are 115200, 921600, 1500000, and 3,000,000 bps although intermediate speeds are also available. Support for changing the baud rate during normal HCI UART operation is included through a vendor-specific command. The CYBT-2X30XX-02 UART operates correctly with the host UART as long as the combined baud rate error of the two devices is within ±5%. The UART interface CYBT-2X30XX-02 has a 1040-byte receive FIFO and a 1040-byte transmit FIFO to support enhanced data rates. The interface supports the Bluetooth UART HCI (H4) specification. The default baud rate for H4 is 115.2 kbaud.

During HCI Mode, the DEV_WAKE signal can be programmed to wake up the CYBT-2X30XX-02 or allow the CYBT-2X30XX-02 to sleep when radio activities permit. The CYBT-2X30XX-02 can also wake up the host as needed or allow the host to sleep via the HOST_WAKE signal. Combined, the two signals allow the host and the CYBT-2X30XX-02 to optimize system power consumption by allowing independent control of low power modes. DEV_WAKE and HOST_WAKE signals can be enabled via a vendor-specific command.

The FW UART driver allows applications to select different baud rates.

Peripheral UART Interface

The CYBT-2X30XX-02 has a second UART that may be used to interface to peripherals. Functionally, the peripheral UART is the same as the HCI UART except for 256-byte TX/RX FIFOs. The peripheral UART is accessed through the I/O ports, which can be configured individually and separately for each functional pin. The CYBT-2X30XX-02 can map the peripheral UART to any GPIO.

Serial Peripheral Interface

The CYBT-2X30XX-02 has two independent SPI interfaces. Both interfaces support single, dual, and Quad Mode SPI operations. Either interface can be a master or a slave. Each interface has a 64-byte transmit buffer and a 64-byte receive buffer. To support more flexibility for user applications, the CYBT-2X30XX-02 has optional I/O ports that can be configured individually and separately for each functional pin.

SPI IO voltage depends on VDDO.

ADC Port

The CYBT-2X30XX-02 includes a Σ-Δ ADC designed for audio and DC measurements. The ADC can measure the voltage on 15 GPIOs (P0, P1, P8-P15, P17, P28, P29, and P37). When used for analog inputs, the GPIOs must be placed in digital input disable mode to disconnect the digital circuit from the pin and avoid leakage. The internal bandgap reference has ±5% accuracy without calibration. Calibration and digital correction schemes can be applied to reduce ADC absolute error and improve measurement accuracy in Direct Current (DC) Mode.

The application can access the ADC through the ADC driver included in the firmware.

The following CYBT-2X30XX-02 module solder pads can be used as ADC inputs:

- Pad 3: P29, ADC Input Channel 10
- Pad 5: P37, ADC Input Channel 2
- Pad 6: P1, ADC Input Channel 28
- Pad 7: P0, ADC Input Channel 29
- Pad 8: P10, ADC Input Channel 25
- Pad 9: P11, ADC Input Channels 24
- Pad 10: P13, ADC Input Channel 22
- Pad 11: P14, ADC Input Channel 21
- Pad 12: P12, ADC Input Channel 23
- Pad 14: P9, ADC Input Channels 26
- Pad 15: P17, ADC Input Channels 18
- Pad 24: P8, ADC Input Channels 27
- Pad 24: P15, ADC Input Channels 20
- Pad 27: P28, ADC Input Channels 11

GPIO Port

The CYBT-2X30XX-02 has a maximum of 20 GPIOs. All GPIOs support the following:

- Programmable pull-up/down of approximately 45 kΩ.
- Input disable mode, allowing pins to be left floating or analog signals connected without risk of leakage.
- Source/sink 8 mA at 3.3 V and 4 mA at 1.8 V.
- P26/P28/P29 can sink/source 16 mA at 3.3 V and 8 mA at 1.8 V.

Most peripheral functions can be assigned to any GPIO using the ModusToolbox Device Configurator. For details on the functions that are assignable via the ModusToolbox Device Configurator, refer to Table 5.

The following list details the GPIOs that are available on the CYBT-2X30XX-02 module:

- P0-P6, P8-P15, P17, P26, P28, P29, and P37

PWM

The CYBT-2X30XX-02 has six internal PWMs, labeled PWM0-5. The PWM module consists of the following:

- Each of the six PWM channels contains the following registers:
  - 16-bit initial value register (read/write)
  - 16-bit toggle register (read/write)
  - 16-bit PWM counter value register (read)
- PWM configuration register shared among PWM0–5 (read/write). This 18-bit register is used:
  - To configure each PWM channel
  - To select the clock of each PWM channel
  - To change the phase of each PWM channel

The application can access the PWM module through the FW driver.

Figure 13 shows the structure of one PWM channel.

Figure 13. PWM Block Diagram

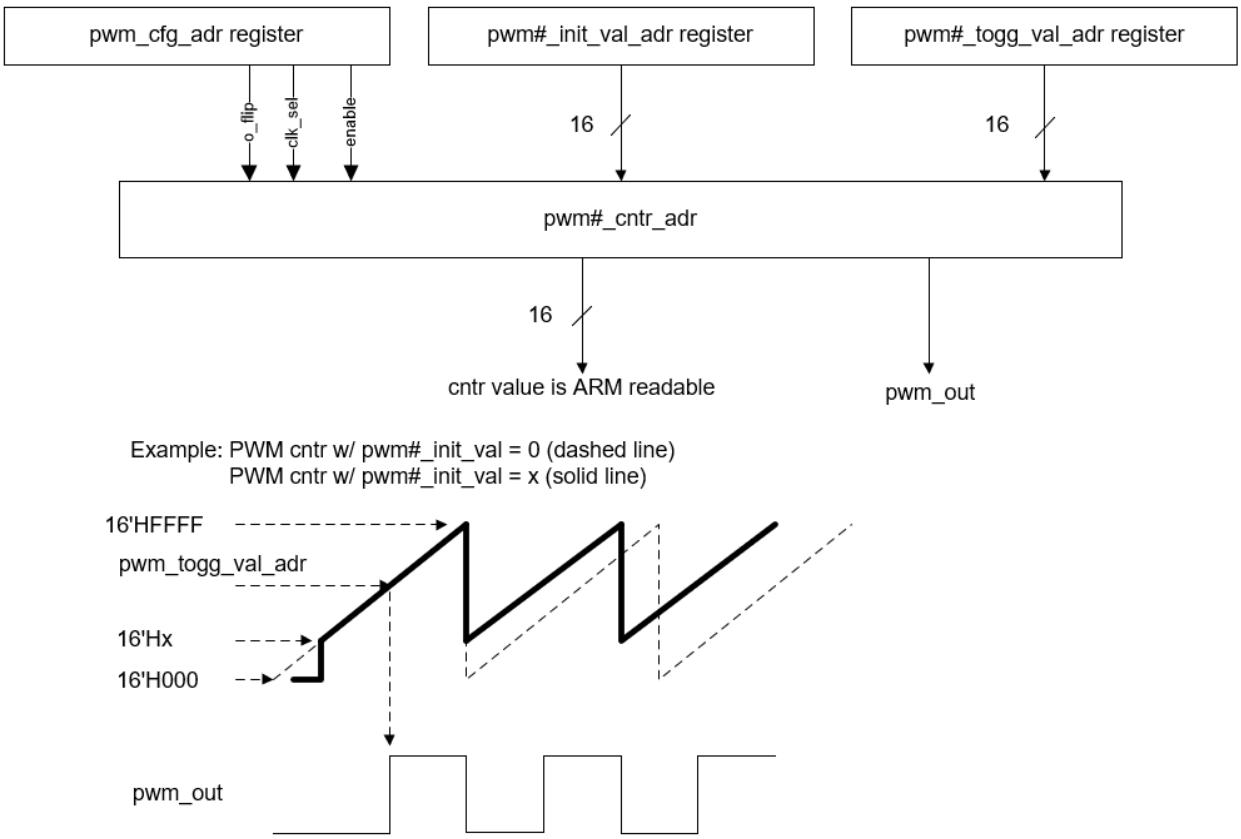

PDM Microphone

The CYBT-2X30XX-02 accepts a ΣΔ-based one-bit pulse density modulation (PDM) input stream and outputs filtered samples at either 8 kHz or 16 kHz sampling rates. The PDM signal derives from an external kit that can process analog microphone signals and generate digital signals. The PDM input shares the filter path with the auxADC. Two types of data rates can be supported:

- 8 kHz
- 16 kHz

The external digital microphone takes in a 2.4-MHz clock generated by the CYBT-2X30XX-02 and outputs a PDM signal, which is registered by the PDM interface with either the rising or falling edge of the 2.4-MHz clock selectable through a programmable control bit. The design can accommodate two simultaneous PDM input channels, so stereo voice is possible.

I^2S Interface

The CYBT-2X30XX-02 supports a single I^2S digital audio port. with both master and slave modes. The I^2S signals are:

- I^2S Clock: I^2S SCK
- I^2S Word Select: I^2S WS
- I^2S Data Out: I^2S DO
- I^2S Data In: I^2S DI

I^2S SCK and I^2S WS become outputs in master mode and inputs in slave mode, while I^2S DO always stays as an output. The channel word length is 16 bits and the data is justified so that the MSB of the left-channel data is aligned with the MSB of the I^2S bus, per I^2S Specifications. The MSB of each data word is transmitted one bit clock cycle after the I^2S WS transition, synchronous with the falling edge of bit clock. Left Channel data is transmitted when I^2S WS is low, and right-channel data is transmitted when I^2S WS is high. Data bits sent by the CYBT-2X30XX-02 are synchronized with the falling edge of I^2S SCK and should be sampled by the receiver on the rising edge of the I^2S SCK.

The clock rate in master mode is either one of the following:

- 32 kHz × 32 bits per frame = 1024 kHz
- 32 kHz × 50 bits per frame = 1600 kHz

The master clock is generated from the reference clock using an N/M clock divider. In the slave mode, any clock rate is supported up to a maximum of 3.072 MHz.

Note: The PCM interface shares HW with the I^2S interface and only one can be used at a given time.

PCM Interface

The CYBT-2X30XX-02 includes a PCM interface that can connect to linear PCM codec devices in master or slave mode. In master mode, the CYBT-2X30XX-02 generates the PCM_CLK and PCM_SYNC signals. In slave mode, these signals are provided by another master on the PCM interface and are inputs to the CYBT-2X30XX-02.The configuration of the PCM interface may be adjusted by the host through the use of vendor-specific HCI commands.

Note: The PCM interface shares HW with the I^2S interface and only one can be used at a given time.

Note: Only audio source (other than SCO) use cases are supported on 20819 at this time.

Slot Mapping

The CYBT-2X30XX-02 supports up to three simultaneous full-duplex channels through the PCM Interface. These three channels are time-multiplexed onto the single PCM interface by using a time-slotting scheme where the 8 kHz or 16 kHz audio sample interval is divided into as many as 16 slots. The number of slots is dependent on the selected interface rate (128 kHz, 512 kHz, or 1024 kHz). The corresponding number of slots for these interface rates is 1, 2, 4, 8, and 16, respectively. The PCM data output driver tristates its output on unused slots to allow other devices to share the same PCM interface signals. The data output driver tristates its output after the falling edge of the PCM clock during the last bit of the slot.

Frame Synchronization

The CYBT-2X30XX-02 supports both short- and long-frame synchronization in both master and slave modes. In short frame synchronization mode, the frame synchronization signal is an active-high pulse at the audio frame rate that is a single-bit period in width and is synchronized to the rising edge of the bit clock. The PCGM slave looks for a high on the falling edge of the bit clock and expects the first bit of the first slot to start at the next rising edge of the clock. In long-frame synchronization mode, the frame synchronization signal is again an active-high pulse at the audio frame rate; however, the duration is three bit periods and the pulse starts coincident with the first bit of the first slot.

Data Formatting

The CYBT-2X30XX-02 may be configured to generate and accept several different data formats. For conventional narrow band speech mode, the CYBT-2X30XX-02 uses 13 of the 16 bits in each PCM frame. The location and order of these 13 bits can be configured to support various data formats on the PCM interface. The remaining three bits are ignored on the input and may be filled with 0s, 1s, a sign bit, or a programmed value on the output. The default format is 13-bit 2's complement data, left justified, and clocked MSB first.

Electrical Characteristics

The absolute maximum ratings in the following table indicate levels where permanent damage to the device can occur, even if these limits are exceeded for only a brief duration. Functional operation is not guaranteed under these conditions. Operation at absolute maximum conditions for extended periods can adversely affect long-term reliability of the device.

.

Table 11. Silicon Absolute Maximum Ratings

Requirement Parameter	Specification			Unit
	Min.	Nom.	Max.	
Maximum Junction Temperature	–	–	125	°C
VDDO1/VDDO2	–0.5	–	3.45	V
IFVDD/PLLVDD/VCOVDD/VDDC	–0.5	–	1.38	V
PMUAVDD/SR_PVDD	–0.5	–	3.45	V
DIGLDO_VDDIN	–0.5	–	1.65	V
RFLDO_VDDIN	–0.5	–	1.65	V
MIC_AVDD	–0.5	–	3.45	V

Table 12. ESD/Latch-up

Requirement Parameter	Specification			Unit
	Min.	Nom.	Max.	
ESD Tolerance HBM (Silicon)	–2000	–	2000	V
ESD Tolerance CDM (Silicon)	–500	–	500	V
Latch-up	–	200	–	mA

Table 13. Power Supply Specifications

Parameter	Conditions	Min.	Typical	Max.	Unit
VDD input	Module Input	1.80	3.0	3.3	V
VDD Ripple	Module Input Ripple (VDD)	–	–	100	mV
VBAT Input	Internal to Module (not accessible)	1.90	3.0	3.3	V
PMU turn-on time	VBAT is ready.	–	–	300	µs

Table 14. Shutdown Voltage (Brown Out)

Parameter	Specification			Unit
	Min.	Typ.	Max.	
V_{SHUT}	1.54	1.62	1.7	V

The CYBT-2X30XX-02 uses an onboard low voltage detector to shut down the device when supply voltage (VBAT) drops below the operating range.

Current Consumption

Table 15 provides the current consumption measurements taken at the input of LDOIN and VDDIO combined (LDOIN = VDDIO = 3.0 V).

Table 15. Current Consumption

Operational Mode	Conditions	Typical	Unit
HCI	48 MHz with Pause	1.3	mA
	48 MHz without Pause	2.55	
RX	Continuous RX	5.9	
TX	Continuous TX - 4 dBm	5.8	
PDS	–	16.5	µA
ePDS	All RAM retained	8.7	
HID-Off (SDS)	32 kHz XTAL on	1.75	

Silicon Core Buck Regulator

Table 16. Core Buck Regulator

Parameter	Conditions	Min.	Typ.	Max.	Unit
Input Supply, VBAT	DC Range	1.71	3.0	3.3	V
Output Current	Active Mode	–	< 60	100	mA
	PDS Mode	–	< 60	70	
Output Voltage	Active Mode	1.1	1.26	1.4	V
	PDS Mode, 40 mV min regulation window.	0.76	0.94 Avg (0.92-0.96)	1.4	
Output Voltage Accuracy	Active Mode, includes line and load regulation. Before trim: After trim:	 –4 –2	–	 +4 +2	 % %
Ripple Voltage	Active Mode 2.2 µH ± 25% inductor, DCR = 114 mΩ ± 20% 4.7 µF ± 10% capacitor, Total ESR < 20 mΩ	–	3	–	mV
	PDS Mode	40	40	–	
Output Inductor, L	Components are included on module.	1.6[3]	2.2	–	µH
Output Capacitor, C_{OUT}		3.0[3]	4.7	–	µF
Input Capacitor, C_{IN}		4.0[3]	10	–	
Input Supply Voltage Ramp Time	0 to 3.3 V	40	–	–	µs

Note
3. Minimum values represent minimums after derating due to tolerance, temperature, and voltage effects.

Digital LDO

Table 17. Digital LDO

Parameter	Condition	Min	Typ	Max	Unit
Input Supply, DIGLDO_VDDIN	Min must be met for correct operation	V_{OUT} + 20 mV	1.26	1.4	V
Output Voltage, DIGLDO_VDDOUT	Range	0.9	1.2	1.275	V
	Step	–	25	–	mV
	Accuracy after trimming	–2	–	+2	%
Dropout Voltage	At max load current	–	–	20	mV
Output Current	DC Load	0.075	40	60	mA
Quiescent Current	At T ≤ 85 °C, V_{IN} = 1.4 V	–	–	40	µA
Output Load Capacitor, C_{OUT}	Total trace + cap ESR must be < 80 mΩ¶	1.55[4]	2.2	–	µF
Line Regulation	1.235 V ≤ V_{IN} ≤ 1.4 V	–	5	10	mV/V
Load Regulation	V_{OUT} = 1.2 V, V_{IN} = 1.26 V, 1 mA ≤ I_{OUT} ≤ 25 mA	–	–	0.44	mV/mA
Load Step Error	I_{OUT} step 1 mA ↔ 20 mA @ 1 µs rise/fall, C_{OUT} = 2.2 µF, V_{IN} = 1.235 V, V_{OUT} = 1.2 V	–24	–	+24	mV
Leakage Current	Power down Mode, V_{IN} = 1.4 V, Temp = 25 °C	–	–	50	nA
	Power down Mode, V_{IN} = 1.4 V, Temp = 125 °C	–	–	2	µA
In-rush Current	C_{OUT} = 2.2 µF, V_{IN} = 1.4 V, V_{OUT} = 1.2 V	–	–	100	mA
LDO Turn On Time	C_{OUT} = 2.2 µF, V_{IN} = 1.4 V, V_{OUT} = 1.2 V, I_{OUT} = 20 mA	–	–	120	µs
PSRR	C_{OUT} = 2.2 µF, 1.235V ≤ V_{IN} ≤ 1.4 V, V_{OUT} = 1.2 V, I_{OUT} = 20 mA f = 1 kHz f = 100 kHz	25 13	–	–	dB dB

RF LDO

Table 18. RF LDO

Parameter	Conditions	Min.	Typ.	Max.	Unit
Input Supply, RFLDO_VDDIN	Min must be met for correct operation	V_{OUT} + 20 mV	1.26	1.4	V
Output Voltage, RFLDO_VDDOUT	Range	1.1	1.2	1.275	V
	Step	–	25	–	mV
	Accuracy after trimming	–2	–	+2	%
Dropout Voltage	At max load current	–	–	20	mV
Output Current	DC Load	0.075	20	60	mA
Quiescent Current	At T ≤ 85 °C, V_{IN} = 1.4 V	–	–	40	µA
Output Load Capacitor, C_{OUT}	Total trace + cap ESR must be < 80 mΩ¶	1.55[4]	2.2	–	µF
Line Regulation	1.235 V ≤ V_{IN} ≤ 1.4 V	–	5	10	mV/V
Load Regulation	V_{OUT} = 1.2 V, V_{IN} = 1.26 V, 1 mA ≤ I_{OUT} ≤ 25 mA	–	–	0.44	mV/mA
Load Step Error	I_{OUT} step 1 mA ↔ 20 mA @ 1 µs rise/fall, C_{OUT} = 2.2 µF, V_{IN} = 1.235 V, V_{OUT} = 1.2 V	–24	–	+24	mV
Leakage Current	Power down Mode, V_{IN} = 1.4 V, Temp = 25 ℜ°C	–	–	50	nA
	Power down Mode, V_{IN} = 1.4 V, Temp = 125 ℜ°C	–	–	2	µA
In-rush Current	C_{OUT} = 2.2 µF, V_{IN} = 1.4 V, V_{OUT} = 1.2 V	–	–	100	mA
LDO Turn On Time	C_{OUT} = 2.2 µF, V_{IN} = 1.4 V, V_{OUT} = 1.2 V, I_{OUT} = 20 mA	–	–	120	µs

Note

4. Minimum values represent minimums after derating due to tolerance, temperature, and voltage effects.

Table 18. RF LDO (continued)

Parameter	Conditions	Min.	Typ.	Max.	Unit
PSRR	C_{OUT} = 2.2 µF, 1.235 V ≤ V_{IN} ≤ 1.4 V, V_{OUT} = 1.2 V, I_{OUT} = 20 mA f = 1 kHz f = 100 kHz	25 13	–	–	dB dB
Noise	C_{OUT} = 2.2 µF, V_{IN} = 1.235 V, V_{OUT} = 1.2 V, I_{OUT} = 20 mA f = 30 kHz f = 100 kHz	–	–	80 70	nV√Hz nV√Hz

Digital I/O Characteristics

Table 19. Digital I/O Characteristics

Characteristics	Symbol	Minimum	Typical	Maximum	Unit
Input low voltage (VDD = 3 V)	V_{IL}	–	–	0.8	V
Input high voltage (VDD = 3 V)	V_{IH}	2.4	–	–	V
Input low voltage (VDD = 1.8 V)	V_{IL}	–	–	0.4	V
Input high voltage (VDD = 1.8 V)	V_{IH}	1.4	–	–	V
Output low voltage	V_{OL}	–	–	0.4	V
Output high voltage	V_{OH}	VDDO – 0.4 V	–	–	V
Input low current	I_{IL}	–	–	1.0	µA
Input high current	I_{IH}	–	–	1.0	µA
Output low current (VDD = 3 V, V_{OL} = 0.4 V)	I_{OL}	–	–	4.0	mA
Output low current (VDD = 3 V, V_{OL} = 1.8 V)	I_{OL}	–	–	2.0	mA
Output high current (VDD = 3 V, V_{OH} = 2.6 V)	I_{OH}	–	–	8.0	mA
Output high current (VDD = 1.8 V, V_{OH} = 1.4 V)	I_{OH}	–	–	4.0	mA
Input capacitance	C_{IN}	–	–	0.4	pF

ADC Characteristics

Table 20. Electrical Characteristics

Parameter	Symbol	Conditions/Comments	Min.	Typ.	Max.	Unit
Current consumption	I_{TOT}	–	–	2	3	mA
Power down current	–	At room temperature	–	1	–	µA
ADC Core Specification						
ADC reference voltage	VREF	From BG with ±3% accuracy	–	0.85	–	V
ADC sampling clock	–	–	–	12	–	MHz
Absolute error	–	Includes gain error, offset and distortion. Without factory calibration.	–	–	5	%
		Includes gain error, offset and distortion. After factory calibration.	–	–	2	%
ENOB	–	For audio application	12	13	–	Bit
		For static measurement	10	–	–	
ADC input full scale	FS	For audio application	–	1.6	–	
		For static measurement	1.8	–	3.3	

Table 20. Electrical Characteristics (continued)

Parameter	Symbol	Conditions/Comments	Min.	Typ.	Max.	Unit
Conversion rate	–	For audio application	8	16	–	kHz
		For static measurement	50	100	–	
Signal bandwidth	–	For audio application	20	–	8K	Hz
		For static measurement	–	DC	–	
Input impedance	R_{IN}	For audio application	10	–	–	KW
		For static measurement	500	–	–	
Startup time	–	For audio application	–	10	–	ms
		For static measurement	–	20	–	µs
MIC PGA Specifications						
MIC PGA gain range	–	–	0	–	42	dB
MIC PGA gain step	–	–	–	1	–	dB
MIC PGA gain error	–	Includes part-to-part gain variation	–1	–	1	dB
PGA input referred noise	–	At 42 dB PGA gain A-weighted	–	–	4	µV
Passband gain flatness	–	PGA and ADC, 100 Hz–4 kHz	–0.5	–	0.5	dB
MIC Bias Specifications						
MIC bias output voltage	–	At 2.5-V supply	–	2.1	–	V
MIC bias loading current	–	–	–	–	3	mA
MIC bias noise	–	Refers to PGA input 20 Hz to 8 kHz, A-weighted	–	–	3	µV
MIC bias PSRR	–	at 1 kHz	40	–	–	dB
ADC SNR	–	A-weighted 0 dB PGA gain	78	–	–	dB
ADC THD + N	–	–3 dBFS input 0 dB PGA gain	74	–	–	dB
GPIO input voltage		Always lower than avddBAT	–	–	3.3	V
GPIO source impedance[5]	–	Resistance	–	–	1	kΩ
		Capacitance	–	–	10	pF

Note
5. Conditional requirement for the measurement time of 10 µs. Relaxed with longer measurement time for each GPIO input channel.

Chipset RF Specifications

Table 21, Table 22, Table 23, and Table 24 apply to single-ended industrial temperatures. Unused inputs are left open.

Table 21. BR/EDR - Receiver RF Specifications

Parameter	Mode and Conditions	Min	Typ	Max	Unit
Receiver Section					
Frequency range	–	2402	–	2480	MHz
RX sensitivity	GFSK, BR GFSK 0.1% BER, 1 Mbps	–	–92[6]	–	dBm
	EDR 2M	–	–93.5	–	dB
	EDR 3M	–	–87	–	
Maximum input	–	–20	–	–	dBm
Interference Performance					
C/I cochannel	GFSK, BR GFSK 0.1% BER[7]	–	–	11.0	dB
C/I 1 MHz adjacent channel	GFSK, BR GFSK 0.1% BER[7]	–	–	0.0	
C/I 2 MHz adjacent channel	GFSK, BR GFSK 0.1% BER[7]	–	–	–30.0	
C/I ≥ 3 MHz adjacent channel	GFSK, BR GFSK 0.1% BER[7]	–	–	–40.0	
C/I image channel	GFSK, BR GFSK 0.1% BER[7]	–	–	–9.0	
C/I 1 MHz adjacent to image channel	GFSK, BR GFSK 0.1% BER[7]	–	–	–20.0	
Out-of-Band Blocking Performance (CW)[8]					
30 MHz to 2000 MHz	BR GFSK 0.1% BER	–	–10.0	–	dBm
2000 MHz to 2399 MHz	BR GFSK 0.1% BER	–	–27	–	
2498 MHz to 3000 MHz	BR GFSK 0.1% BER	–	–27	–	
3000 MHz to 12.75 GHz	BR GFSK 0.1% BER	–	–10.0	–	
Intermodulation Performance[7]					
BT, interferer signal level	BR GFSK 0.1% BER	–	–	–39.0	dBm
Spurious Emissions					
30 MHz to 1 GHz	–	–	–	–57.0	dBm
1 GHz to 12.75 GHz	–	–	–	–55.0	

Notes
6. The receiver sensitivity is measured at BER of 0.1% on the device interface with dirty TX Off.
7. Desired signal is 10 dB above the reference sensitivity level (defined as –70 dBm).
8. Desired signal is 3 dB above the reference sensitivity level (defined as –70 dBm).

Table 22. BR/EDR - Transmitter RF Specifications

Parameter	Min	Typ	Max	Unit
Transmitter Section				
Frequency range	2402	–	2480	MHz
Class 2: BR TX power	–	15	–	dBm
Class 2: EDR 2M and 3M TX power	–	15	–	
20 dB bandwidth	–	930	1000	kHz
Adjacent Channel Power				
|M – N| = 2	–	–	–20	dBm
|M – N| ≥ 3 [9]	–	–	–40	
Out-of-Band Spurious Emission				
30 MHz to 1 GHz	–	–	–36.0	dBm
1 GHz to 12.75 GHz	–	–	–30.0	
1.8 GHz to 1.9 GHz	–	–	–47.0	
5.15 GHz to 5.3 GHz	–	–	–47.0	
LO Performance				
Initial carrier frequency tolerance	–75	–	+75	kHz
Frequency Drift				
DH1 packet	–25	–	+25	kHz
DH3 packet	–40	–	+40	
DH5 packet	–40	–	+40	
Drift rate	–20	–	20	kHz/50 µs
Frequency Deviation				
Average deviation in payload (sequence used is 00001111)	140	–	175	kHz
Maximum deviation in payload (sequence used is 10101010)	115	–	–	
Channel spacing	–	1	–	MHz

Table 23. Bluetooth LE RF Specifications

Parameter	Conditions	Minimum	Typical	Maximum	Unit
Frequency range	N/A	2402	–	2480	MHz
RX sensitivity[10]	GFSK, BDR GFSK 0.1% BER 0.1% BER, 1 Mbps	–	–95	–	dBm
TX power	N/A	–	15	–	
Mod Char: Delta F1 average	N/A	225	255	275	kHz
Mod Char: Delta F2 max[11]	N/A	99.9	–	–	%
Mod Char: Ratio	N/A	0.8	–	–	%

Notes
9. Meets SIG Specification.
10. Dirty TX is Off.
11. At least 99.9% of all delta F2 max frequency values recorded over 10 packets must be greater than 185 kHz.

Table 24. BLE2 RF Specifications

Parameter	Conditions	Minimum	Typical	Maximum	Unit
RX sensitivity[12]	–	–	–89	–	dBm
TX power	–	–	4.0	–	

Timing and AC Characteristics

In this section, use the numbers listed in the **Reference** column of each table to interpret the following timing diagrams.

UART Timing

Table 25. UART Timing Specifications

Reference	Characteristics	Min.	Typ.	Max.	Unit
1	Delay time, UART_CTS_N low to UART_TXD valid.	–	–	1.50	Bit periods
2	Setup time, UART_CTS_N high before midpoint of stop bit.	–	–	0.67	Bit periods
3	Delay time, midpoint of stop bit to UART_RTS_N high.	–	–	1.33	Bit periods

Figure 14. UART Timing

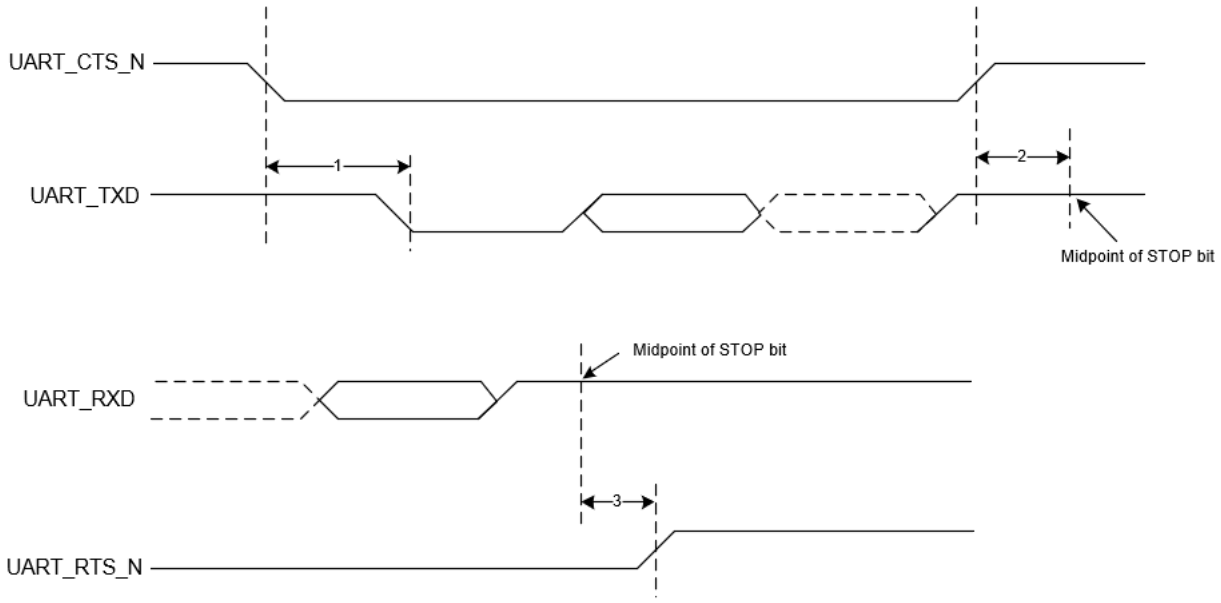

Note
12. 255 byte packet.

SPI Timing

The SPI interface can be clocked up to 24 MHz.

Table 26 and Figure 15 show the timing requirements when operating in SPI Mode 0 and 2.

Table 26. SPI Mode 0 and 2

Reference	Characteristics	Min.	Max.	Unit
1	Time from master assert SPI_CSN to first clock edge	45	–	ns
2	Setup time for MOSI data lines	6	¾ SCK	
3	Idle time between subsequent SPI transactions	1 SCK	–	

Figure 15. SPI Timing, Mode 0 and 2

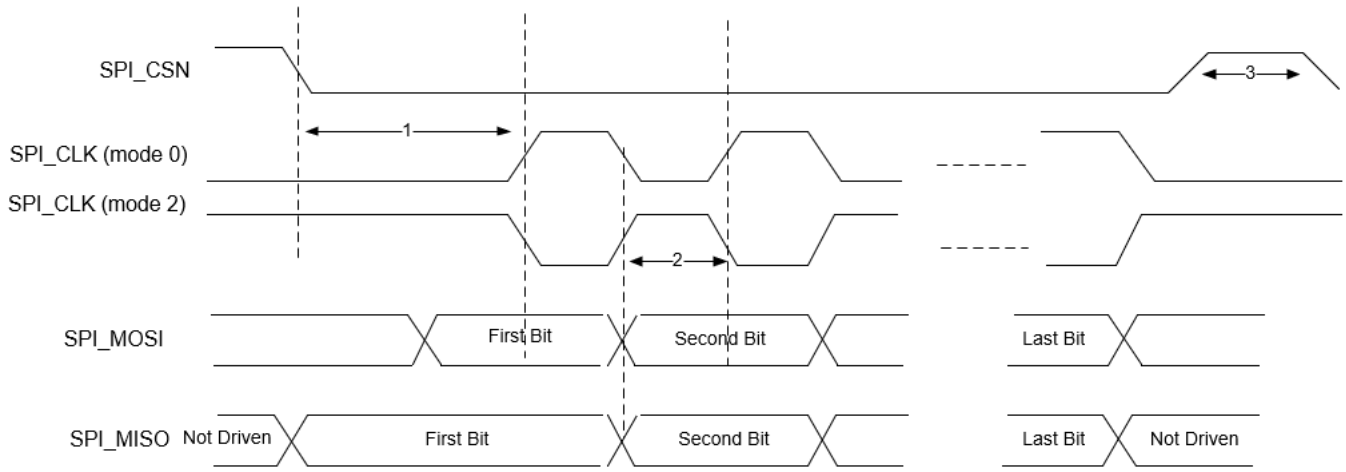

Table 27 and Figure 16 show the timing requirements when operating in SPI Mode 1 and 3.

Table 27. SPI Mode 1 and 3

Reference	Characteristics	Min.	Max.	Unit
1	Time from master assert SPI_CSN to first clock edge	45	–	ns
2	Setup time for MOSI data lines	6	¾ SCK	
3	Idle time between subsequent SPI transactions	1 SCK	–	

Figure 16. SPI Timing, Mode 1 and 3

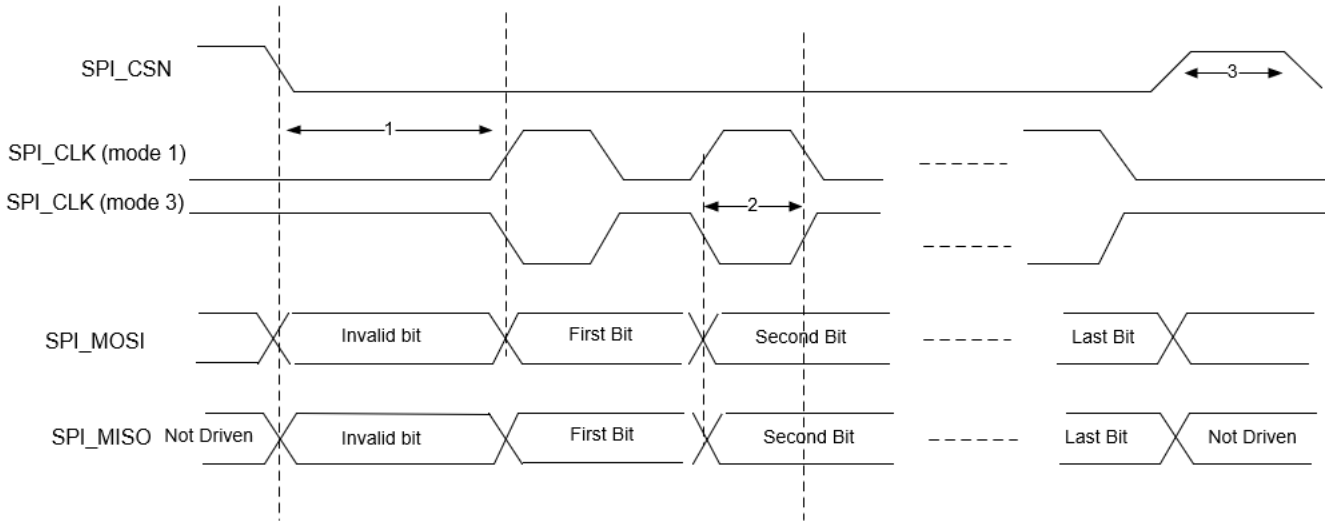

I²C Compatible Interface Timing

The specifications in Table 27 references Figure .

Table 28. I2C Interface Timing Specifications (up to 1 MHz)

Reference	Characteristics	Minimum	Maximum	Unit
1	Clock frequency	–	100	kHz
			400	
			800	
			1000	
2	START condition setup time	650	–	ns
3	START condition hold time	280	–	
4	Clock low time	650	–	
5	Clock high time	280	–	
6	Data input hold time[13]	0	–	
7	Data input setup time	100	–	
8	STOP condition setup time	280	–	
9	Output valid from clock	–	400	
10	Bus free time[14]	650	–	

Figure 17. I²C Interface Timing Diagram

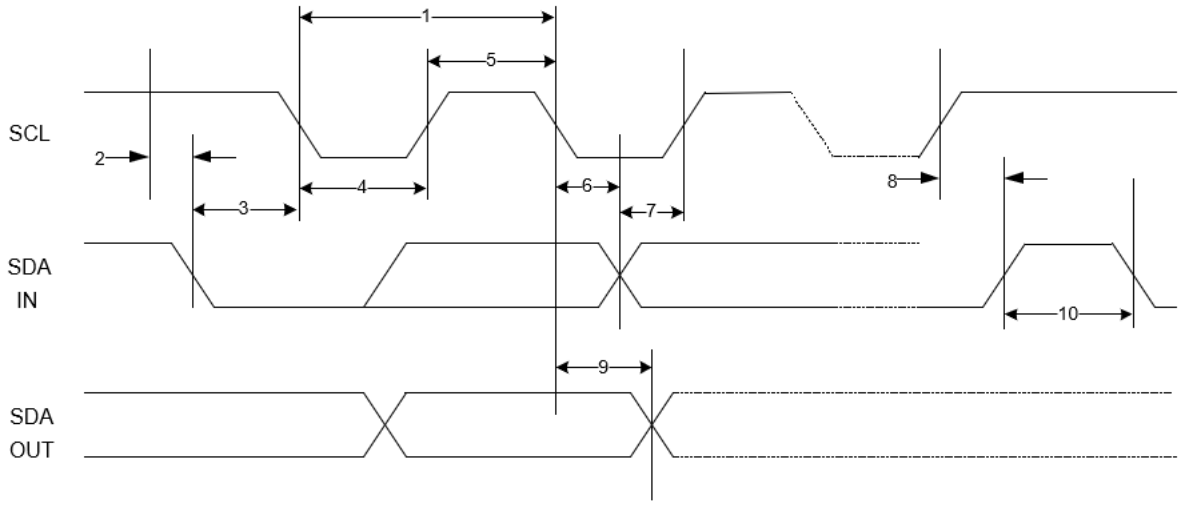

Notes
13. As a transmitter, 125 ns of delay is provided to bridge the undefined region of the falling edge of SCL to avoid unintended generation of START or STOP conditions.
14. Time that the CBUS must be free before a new transaction can start.

I²S Interface Timing

I²S timing is shown below in Table 29, Figure 18, and Figure 19.

Table 29. Timing for I²S Transmitters and Receivers

	Transmitter				Receiver				Notes
	Lower LImit		Upper Limit		Lower Limit		Upper Limit		
	Min	Max	Min	Max	Min	Max	Min	Max	
Clock Period T	T_{tr}	–	–	–	T_r	–	–	–	[15]
Master Mode: Clock generated by transmitter or receiver									
HIGH t_{HC}	$0.35T_{tr}$	–	–	–	$0.35T_{tr}$	–	–	–	[16]
LOWt_{LC}	$0.35T_{tr}$	–	–	–	$0.35T_{tr}$	–	–	–	[16]
Slave Mode: Clock accepted by transmitter or receiver									
HIGH t_{HC}	–	$0.35T_{tr}$	–	–	–	$0.35T_{tr}$	–	–	[15]
LOW t_{LC}	–	$0.35T_{tr}$	–	–	–	$0.35T_{tr}$	–	–	[15]
Rise time t_{RC}	–	–	$0.15T_{tr}$	–	–	–		–	[16]
Transmitter									
Delay t_{dtr}	–	–	–	0.8T	–	–	–	–	[17]
Hold time t_{htr}	0	–	–	–	–	–	–	–	[16]
Receiver									
Setup time t_{sr}	–	–	–	–	$0.2T_{tr}$	–	–	–	[18]
Hold time t_{hr}	–	–	–	–	$0.2T_{tr}$	–	–	–	[18]

Notes

15. The system clock period T must be greater than T_{tr} and T_r because both the transmitter and receiver have to be able to handle the data transfer rate.
16. At all data rates in master mode, the transmitter or receiver generates a clock signal with a fixed mark/space ratio. For this reason, t_{HC} and t_{LC} are specified with respect to T.
17. In slave mode, the transmitter and receiver need a clock signal with minimum HIGH and LOW periods so that they can detect the signal. So long as the minimum periods are greater than $0.35T_r$, any clock that meets the requirements can be used.
18. Because the delay (t_{dtr}) and the maximum transmitter speed (defined by T_{tr}) are related, a fast transmitter driven by a slow clock edge can result in tdtr not exceeding t_{RC} which means t_{htr} becomes zero or negative. Therefore, the transmitter has to guarantee that t_{htr} is greater than or equal to zero, so long as the clock rise-time tRC is not more than t_{RCmax}, where t_{RCmax} is not less than $0.15T_{tr}$.
19. To allow data to be clocked out on a falling edge, the delay is specified with respect to the rising edge of the clock signal and T, always giving the receiver sufficient setup time.
20. The data setup and hold time must not be less than the specified receiver setup and hold time.

Figure 18. I²S Transmitter Timing

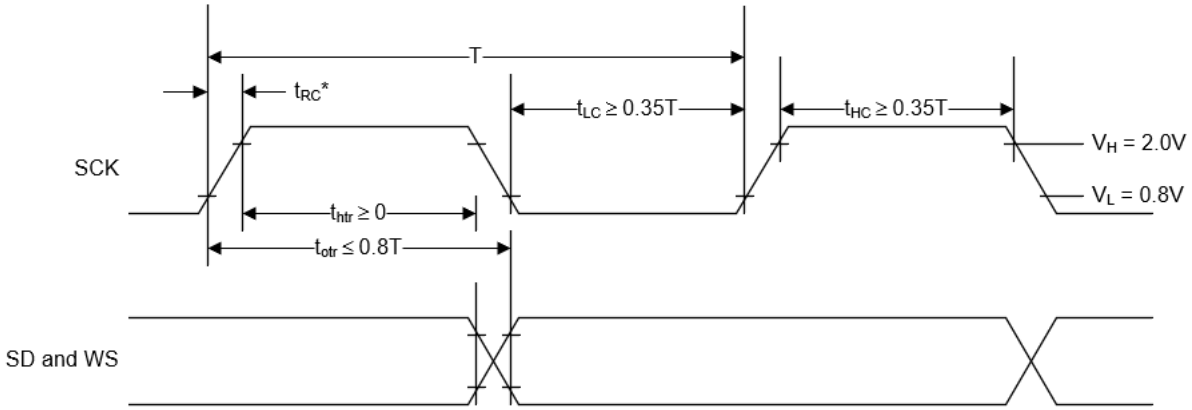

T = Clock period
T_{tr} = Minimum allowed clock period for transmitter
$T = T_{tr}$
* t_{RC} is only relevant for transmitters in slave mode.

Figure 19. I²S Receiver Timing

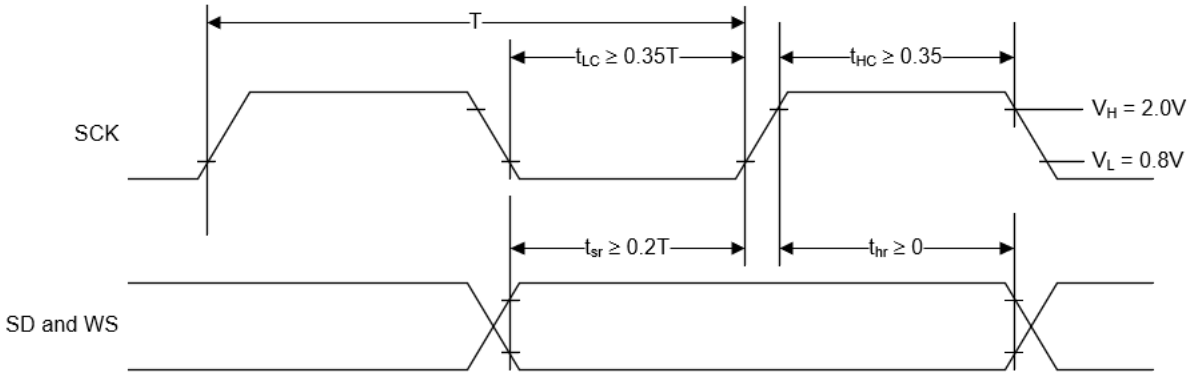

T = Clock period
T_r = Minimum allowed clock period for transmitter
$T > T_r$

Environmental Specifications

Environmental Compliance

This Cypress Bluetooth LE module is produced in compliance with the Restriction of Hazardous Substances (RoHS) and Halogen-Free (HF) directives. The Cypress module and components used to produce this module are RoHS and HF compliant.

RF Certification

The CYBT-2X30XX-02 module is certified under the following RF certification standards:

- FCC: WAP3063
- ISED: 7922A-3063
- MIC: 217-200006
- CE

Safety Certification

The CYBT-2X30XX-02 module complies with the following safety regulations:

- Underwriters Laboratories, Inc. (UL): Filing E331901
- CSA
- TUV

Environmental Conditions

Table 30 describes the operating and storage conditions for the Cypress Bluetooth module.

Table 30. Environmental Conditions for CYBT-2X30XX-02

Description	Minimum Specification	Maximum Specification
Operating temperature	–30 °C	85 °C
Operating humidity (relative, non-condensation)	5%	85%
Thermal ramp rate	–	10 °C/minute
Storage temperature	–40 °C	85 °C
Storage temperature and humidity	–	85 °C at 85%
ESD: Module integrated into system Components[21]	–	15 kV Air 2.0 kV Contact

ESD and EMI Protection

Exposed components require special attention to ESD and electromagnetic interference (EMI).

A grounded conductive layer inside the device enclosure is suggested for EMI and ESD performance. Any openings in the enclosure near the module should be surrounded by a grounded conductive layer to provide ESD protection and a low-impedance path to ground.

Device Handling: Proper ESD protocol must be followed in manufacturing to ensure component reliability.

Note
21. This does not apply to the RF pins (ANT).

Regulatory Information

FCC

FCC NOTICE:

The device CYBT-2X30XX-02 complies with Part 15 of the FCC Rules. Operation is subject to the following two conditions:

(1) This device may not cause harmful interference, and

(2) This device must accept any interference received, including interference that may cause undesired operation.

The device meets the requirements for modular transmitter approval as detailed in FCC public Notice DA00-1407.

CAUTION:

The FCC requires the user to be notified that any changes or modifications made to this device that are not expressly approved by Cypress Semiconductor may void the user's authority to operate the equipment.

This equipment has been tested and found to comply with the limits for a Class B digital device, pursuant to Part 15 of the FCC Rules. These limits are designed to provide reasonable protection against harmful interference in a residential installation. This equipment generates uses and can radiate radio frequency energy and, if not installed and used in accordance with the instructions, may cause harmful interference to radio communications. However, there is no guarantee that interference will not occur in a particular installation. If this equipment does cause harmful interference to radio or television reception, which can be determined by turning the equipment off and on, the user is encouraged to try to correct the interference by one or more of the following measures:

- Reorient or relocate the receiving antenna.
- Increase the separation between the equipment and receiver.
- Connect the equipment into an outlet on a circuit different from that to which the receiver is connected.
- Consult the dealer or an experienced radio/TV technician for help

LABELING REQUIREMENTS:

The Original Equipment Manufacturer (OEM) must ensure that FCC labelling requirements are met. This includes a clearly visible label on the outside of the OEM enclosure specifying the appropriate Cypress Semiconductor FCC identifier for this product as well as the FCC Notice above. The FCC identifier is FCC ID: **WAP3063**.

In any case the end product must be labeled exterior with “**Contains FCC ID: WAP3063**”.

ANTENNA WARNING:

This device is tested with a standard SMA connector and with the antenna listed in Table 7 on page 13. When integrated in the OEMs product, this fixed antenna requires installation preventing end-users from replacing them with non-approved antennas. Any antenna not in Table 7 on page 13 must be tested to comply with FCC Section 15.203 for unique antenna connectors and Section 15.247 for emissions.

RF EXPOSURE:

To comply with FCC RF Exposure requirements, the Original Equipment Manufacturer (OEM) must ensure to install the approved antenna in the previous. Antenna must be placed or installed to make safety minimum distance of 20cm from human body.

The preceding statement must be included as a CAUTION statement in manuals, for products operating with the approved antenna in Table 7 on page 13, to alert users on FCC RF Exposure compliance. Any notification to the end user of installation or removal instructions about the integrated radio module is not allowed.

The radiated output power of CYBT-2X30XX-02 with the integrated PCB trace antenna (FCC ID: **WAP3063**) is far below the FCC radio frequency exposure limits. Nevertheless, use CYBT-2X30XX-02 in such a manner that minimizes the potential for human contact during normal operation.

End users may not be provided with the module installation instructions. OEM integrators and end users must be provided with transmitter operating conditions for satisfying RF exposure compliance.

ISED

Innovation, Science and Economic Development (ISED) Canada Certification

CYBT-2X30XX-02 is licensed to meet the regulatory requirements of Innovation, Science and Economic Development (ISED) Canada.

License: IC: **7922A-3063**

Product Marketing Name: EZ-BT WICED Module

Manufacturers of mobile, fixed or portable devices incorporating this module are advised to clarify any regulatory questions and ensure compliance for SAR and/or RF exposure limits. Users can obtain Canadian information on RF exposure and compliance from www.ic.gc.ca.

This device has been designed to operate with the antenna listed in Table 7 on page 13, having a maximum gain of -0.5 dBi. Antennas not included in Table 7 on page 13 or having a gain greater than -0.5 dBi are strictly prohibited for use with this device. The required antenna impedance is 50 ohms. The antenna used for this transmitter must not be co-located or operating in conjunction with any other antenna or transmitter.

ISED NOTICE:

The device CYBT-2X30XX-02 including the built-in trace antenna complies with Canada RSS-GEN Rules. The device meets the requirements for modular transmitter approval as detailed in RSS-GEN. Operation is subject to the following two conditions: (1) This device may not cause harmful interference, and (2) This device must accept any interference received, including interference that may cause undesired operation.

L'appareil CYBT-2X30XX-02, y compris l'antenne intégrée, est conforme aux Règles RSS-GEN de Canada. L'appareil répond aux exigences d'approbation de l'émetteur modulaire tel que décrit dans RSS-GEN. L'opération est soumise aux deux conditions suivantes: (1) Cet appareil ne doit pas causer d'interférences nuisibles, et (2) Cet appareil doit accepter toute interférence reçue, y compris les interférences pouvant entraîner un fonctionnement indésirable.

ISED INTERFERENCE STATEMENT FOR CANADA

This device complies with Innovation, Science and Economic Development (ISED) Canada licence-exempt RSS standard(s). Operation is subject to the following two conditions: (1) this device may not cause interference, and (2) this device must accept any interference, including interference that may cause undesired operation of the device.

Cet appareil est conforme à la norme sur l'innovation, la science et le développement économique (ISED) norme RSS exempte de licence. L'exploitation est autorisée aux deux conditions suivantes : (1) l'appareil ne doit pas produire de brouillage, et (2) l'utilisateur de l'appareil doit accepter tout brouillage radioélectrique subi, même si le brouillage est susceptible d'en compromettre le fonctionnement.

ISED RADIATION EXPOSURE STATEMENT FOR CANADA

This equipment complies with ISED radiation exposure limits set forth for an uncontrolled environment.

Cet équipement est conforme aux limites d'exposition aux radiations ISED prévues pour un environnement incontrôlé.

LABELING REQUIREMENTS:

The Original Equipment Manufacturer (OEM) must ensure that ISED labeling requirements are met. This includes a clearly visible label on the outside of the OEM enclosure specifying the appropriate Cypress Semiconductor IC identifier for this product as well as the ISED Notices above. The IC identifier is **7922A-3063**. In any case, the end product must be labeled in its exterior with "**Contains IC: 7922A-3063**".

Le fabricant d'équipement d'origine (OEM) doit s'assurer que les exigences d'étiquetage ISED sont respectées. Cela comprend une étiquette clairement visible à l'extérieur de l'enceinte OEM spécifiant l'identifiant Cypress Semiconductor IC approprié pour ce produit ainsi que l'avis ISED ci-dessus. L'identificateur IC est 7922A-3063. En tout cas, le produit final doit être étiqueté dans son extérieur avec "Contient **IC: 7922A-3063**".

European Declaration of Conformity

Hereby, Cypress Semiconductor declares that the Bluetooth module CYBT-2X30XX-02 complies with the essential requirements and other relevant provisions of Directive 2014. As a result of the conformity assessment procedure described in Annex III of the Directive 2014, the end-customer equipment should be labeled as follows:

All versions of the CYBT-2X30XX-02 in the specified reference design can be used in the following countries: Austria, Belgium, Cyprus, Czech Republic, Denmark, Estonia, Finland, France, Germany, Greece, Hungary, Ireland, Italy, Latvia, Lithuania, Luxembourg, Malta, Poland, Portugal, Slovakia, Slovenia, Spain, Sweden, The Netherlands, the United Kingdom, Switzerland, and Norway.

MIC Japan

CYBT-2X30XX-02 is certified as a module with certification number **217-200006**. End products that integrate CYBT-2X30XX-02 do not need additional MIC Japan certification for the end product.

End product can display the certification label of the embedded module.

Model Name: EZ-BT WICED Module

Part Number: CYBT-273063-02, CYBT-263064-02, CYBT-263065-02

Manufactured by Cypress Semiconductor.

R **217-200006**

Packaging

Table 31. Solder Reflow Peak Temperature

Module Part Number	Package	Maximum Peak Temperature	Maximum Time at Peak Temperature	No. of Cycles
CYBT-273063-02	35-pad SMT	260 °C	30 seconds	2
CYBT-263064-02	35-pad SMT	260 °C	30 seconds	2
CYBT-263065-02	35-pad SMT	260 °C	30 seconds	2

Table 32. Package Moisture Sensitivity Level (MSL), IPC/JEDEC J-STD-2

Module Part Number	Package	MSL
CYBT-273063-02	35-pad SMT	MSL 3
CYBT-263064-02	35-pad SMT	MSL 3
CYBT-263065-02	35-pad SMT	MSL 3

The CYBT-2X30XX-02 is offered in tape and reel packaging. Figure 20 details the tape dimensions used for the CYBT-2X30XX-02.

Figure 20. CYBT-2X30XX-02 Tape Dimensions

Item	W	A_0	B_0	K_0	P	F	E	D_0	D_1	P_0	P_2	T
Measurement	$24.0^{+0.30}_{-0.30}$	$17.0^{+0.10}_{-0.10}$	$12.4^{+0.10}_{-0.10}$	$2.3^{+0.10}_{-0.10}$	$24.0^{+0.10}_{-0.10}$	$11.5^{+0.10}_{-0.10}$	$1.75^{+0.10}_{-0.10}$	$1.50^{+0.10}_{-0.00}$	$1.50^{+0.10}_{-0.10}$	$4.00^{+0.10}_{-0.10}$	$2.00^{+0.10}_{-0.10}$	$0.3^{+0.05}_{-0.05}$

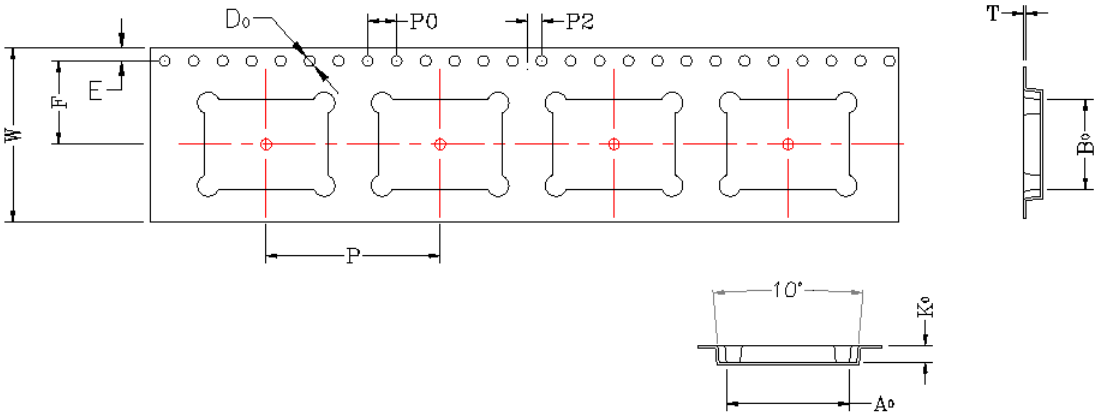

Figure 21 details the orientation of the CYBT-2X30XX-02 in the tape as well as the direction for unreeling.

Figure 21. Component Orientation in Tape and Unreeling Direction

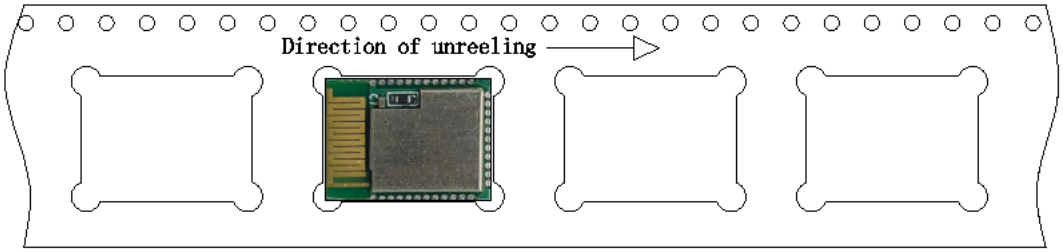

Figure 22 details reel dimensions used for the CYBT-2X30XX-02.

Figure 22. Reel Dimensions

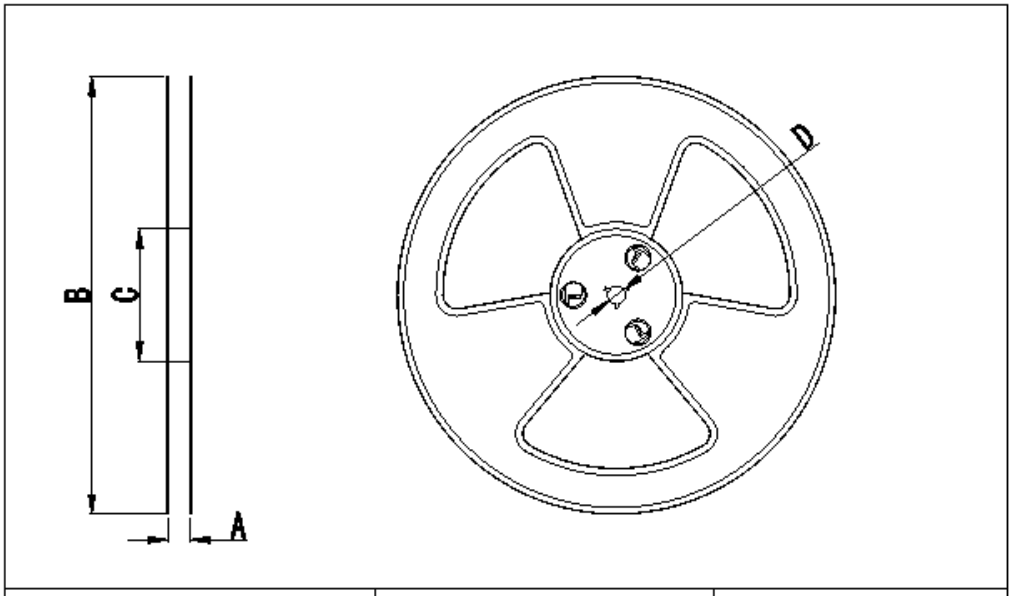

Index	NOTE	Dimension	Tolerance	
A	Inside Width	24.4	+2.0mm	-0.0mm
B	Reel Diameter	254.00	+2.0mm	-2.0mm
C	Outer Axis Diameter	100.00	+2.0mm	-2.0mm
D	Inner Axis Diameter	13.20	+0.3mm	-0.2mm

The CYBT-2X30XX-02 is designed to be used with pick-and-place equipment in an SMT manufacturing environment. The center-of-mass for the CYBT-2X30XX-02 is detailed in Figure 23.

Figure 23. CYBT-2X30XX-02 Center of Mass

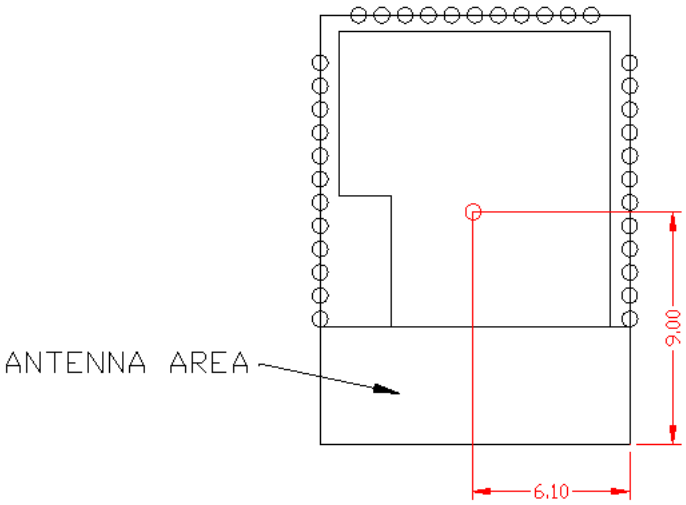

Top View (Seen from Top)

Ordering Information

Table 33 lists the CYBT-2X30XX-02 part number and features. Table 33 also lists the target program for the respective module ordering codes. Table 34 lists the reel shipment quantities for the CYBT-2X30XX-02.

Table 33. Ordering Information

Ordering Part Number	Max CPU Speed (MHz)	Flash Size (KB)	RAM Size (KB)	UART	I^2C	SPI	I^2S	PCM	PWM	Antenna	ADC Inputs	GPIOs	Package	Packaging
CYBT-273063-02	96	256	176	Yes	Yes	Yes	Yes	Yes	6	Integrated[22]	14	20	35-SMT	Tape and Reel
CYBT-263064-02	96	256	176	Yes	Yes	Yes	Yes	Yes	6	External[23]	14	20	35-SMT	Tape and Reel
CYBT-263065-02	96	256	176	Yes	Yes	Yes	Yes	Yes	6	External[24]	14	20	35-SMT	Tape and Reel

Table 34. Tape and Reel Package Quantity and Minimum Order Amount

Description	Minimum Reel Quantity	Maximum Reel Quantity	Comments
Reel Quantity	500	500	Ships in 500 unit reel quantities.
Minimum Order Quantity (MOQ)	500	–	–
Order Increment (OI)	500	–	–

The CYBT-2X30XX-02 is offered in tape and reel packaging. The CYBT-2X30XX-02 ships in a reel size of 500 units.

For additional information and a complete list of Cypress Semiconductor Bluetooth products, contact your local Cypress sales representative. To locate the nearest Cypress office, visit our website.

U.S. Cypress Headquarters Address	198 Champion Court, San Jose, CA 95134
U.S. Cypress Headquarter Contact Info	(408) 943-2600
Cypress website address	www.cypress.com

Notes
22. The CYBT-273063-02 includes an integrated trace antenna.
23. The CYBT-263064-02 supports an external antenna through a RF solder pad output.
24. The CYBT-263065-02 supports an external antenna via a u-FL connector.

Acronyms

Table 35. Acronyms Used in this Document

Acronym	Description
BLE	Bluetooth Low Energy
Bluetooth SIG	Bluetooth Special Interest Group
CE	European Conformity
CSA	Canadian Standards Association
EMI	electromagnetic interference
ESD	electrostatic discharge
FCC	Federal Communications Commission
GPIO	general-purpose input/output
ISED	Innovation, Science and Economic Development (Canada)
IDE	integrated design environment
KC	Korea Certification
MIC	Ministry of Internal Affairs and Communications (Japan)
PCB	printed circuit board
RX	receive
QDID	qualification design ID
SMT	surface-mount technology; a method for producing electronic circuitry in which the components are placed directly onto the surface of PCBs
TCPWM	timer, counter, pulse width modulator (PWM)
TUV	Germany: Technischer Überwachungs-Verein (Technical Inspection Association)
TX	transmit

Document Conventions

Units of Measure

Table 36. Units of Measure

Symbol	Unit of Measure
°C	degree Celsius
dB	decibel
dBi	decibels relative to isotropic
dBm	decibel-milliwatts
kV	kilovolt
mA	milliamperes
mm	millimeters
mV	millivolt
µA	microamperes
µm	micrometers
MHz	megahertz
GHz	gigahertz
V	volt

Document History Page

Document Title: CYBT-273063-02/CYBT-263064-02/CYBT-263065-02, EZ-BT Module Document Number: 002-29354			
Revision	**ECN**	**Submission Date**	**Description of Change**
**	6761681	09/24/2020	Preliminary datasheet for CYBT-273063-02, CYBT-263064-02, and CYBT-263065-02 module.
*A	7052743	12/23/2020	Replaced “Bluetooth Low Energy (BLE)” with “Bluetooth Low Energy” in all instances across the document. Replaced “BLE” with “Bluetooth LE” in all instances across the document.
*B	7678535	02/24/2022	Updated CTS description/VDDIN Updated Table 11 and Table 16

Sales, Solutions, and Legal Information

Worldwide Sales and Design Support

Cypress maintains a worldwide network of offices, solution centers, manufacturer's representatives, and distributors. To find the office closest to you, visit us at Cypress Locations.

Products

Arm® Cortex® Microcontrollers	cypress.com/arm
Automotive	cypress.com/automotive
Clocks & Buffers	cypress.com/clocks
Interface	cypress.com/interface
Internet of Things	cypress.com/iot
Memory	cypress.com/memory
Microcontrollers	cypress.com/mcu
PSoC	cypress.com/psoc
Power Management ICs	cypress.com/pmic
Touch Sensing	cypress.com/touch
USB Controllers	cypress.com/usb
Wireless Connectivity	cypress.com/wireless

PSoC® Solutions

PSoC 1 | PSoC 3 | PSoC 4 | PSoC 5LP | PSoC 6 MCU

Cypress Developer Community

Community | Code Examples | Projects | Video | Blogs | Training | Components

Technical Support

cypress.com/support

© Cypress Semiconductor Corporation, 2020-2022. This document is the property of Cypress Semiconductor Corporation, an Infineon Technologies company, and its affiliates ("Cypress"). This document, including any software or firmware included or referenced in this document ("Software"), is owned by Cypress under the intellectual property laws and treaties of the United States and other countries worldwide. Cypress reserves all rights under such laws and treaties and does not, except as specifically stated in this paragraph, grant any license under its patents, copyrights, trademarks, or other intellectual property rights. If the Software is not accompanied by a license agreement and you do not otherwise have a written agreement with Cypress governing the use of the Software, then Cypress hereby grants you a personal, non-exclusive, nontransferable license (without the right to sublicense) (1) under its copyright rights in the Software (a) for Software provided in source code form, to modify and reproduce the Software solely for use with Cypress hardware products, only internally within your organization, and (b) to distribute the Software in binary code form externally to end users (either directly or indirectly through resellers and distributors), solely for use on Cypress hardware product units, and (2) under those claims of Cypress's patents that are infringed by the Software (as provided by Cypress, unmodified) to make, use, distribute, and import the Software solely for use with Cypress hardware products. Any other use, reproduction, modification, translation, or compilation of the Software is prohibited.

TO THE EXTENT PERMITTED BY APPLICABLE LAW, CYPRESS MAKES NO WARRANTY OF ANY KIND, EXPRESS OR IMPLIED, WITH REGARD TO THIS DOCUMENT OR ANY SOFTWARE OR ACCOMPANYING HARDWARE, INCLUDING, BUT NOT LIMITED TO, THE IMPLIED WARRANTIES OF MERCHANTABILITY AND FITNESS FOR A PARTICULAR PURPOSE. No computing device can be absolutely secure. Therefore, despite security measures implemented in Cypress hardware or software products, Cypress shall have no liability arising out of any security breach, such as unauthorized access to or use of a Cypress product. CYPRESS DOES NOT REPRESENT, WARRANT, OR GUARANTEE THAT CYPRESS PRODUCTS, OR SYSTEMS CREATED USING CYPRESS PRODUCTS, WILL BE FREE FROM CORRUPTION, ATTACK, VIRUSES, INTERFERENCE, HACKING, DATA LOSS OR THEFT, OR OTHER SECURITY INTRUSION (collectively, "Security Breach"). Cypress disclaims any liability relating to any Security Breach, and you shall and hereby do release Cypress from any claim, damage, or other liability arising from any Security Breach. In addition, the products described in these materials may contain design defects or errors known as errata which may cause the product to deviate from published specifications. To the extent permitted by applicable law, Cypress reserves the right to make changes to this document without further notice. Cypress does not assume any liability arising out of the application or use of any product or circuit described in this document. Any information provided in this document, including any sample design information or programming code, is provided only for reference purposes. It is the responsibility of the user of this document to properly design, program, and test the functionality and safety of any application made of this information and any resulting product. "High-Risk Device" means any device or system whose failure could cause personal injury, death, or property damage. Examples of High-Risk Devices are weapons, nuclear installations, surgical implants, and other medical devices. "Critical Component" means any component of a High-Risk Device whose failure to perform can be reasonably expected to cause, directly or indirectly, the failure of the High-Risk Device, or to affect its safety or effectiveness. Cypress is not liable, in whole or in part, and you shall and hereby do release Cypress from any claim, damage, or other liability arising from any use of a Cypress product as a Critical Component in a High-Risk Device. You shall indemnify and hold Cypress, including its affiliates, and its directors, officers, employees, agents, distributors, and assigns harmless from and against all claims, costs, damages, and expenses, arising out of any claim, including claims for product liability, personal injury or death, or property damage arising from any use of a Cypress product as a Critical Component in a High-Risk Device. Cypress products are not intended or authorized for use as a Critical Component in any High-Risk Device except to the limited extent that (i) Cypress's published data sheet for the product explicitly states Cypress has qualified the product for use in a specific High-Risk Device, or (ii) Cypress has given you advance written authorization to use the product as a Critical Component in the specific High-Risk Device and you have signed a separate indemnification agreement.

Cypress, the Cypress logo, and combinations thereof, PSoC, CapSense, EZ-USB, F-RAM, Traveo, WICED, and ModusToolbox are trademarks or registered trademarks of Cypress or a subsidiary of Cypress in the United States or in other countries. For a more complete list of Cypress trademarks, visit cypress.com. Other names and brands may be claimed as property of their respective owners.