CY3660

enCoRe™ V and enCoRe V LV Development Kit Guide

Doc. No. 001-41500 Rev. *A

Cypress Semiconductor
198 Champion Court
San Jose, CA 95134-1709

Phone (USA): 800.858.1810
Phone (Intnl): 408.943.2600
http://www.cypress.com

Copyrights

© Cypress Semiconductor Corporation, 2011-2012. The information contained herein is subject to change without notice. Cypress Semiconductor Corporation assumes no responsibility for the use of any circuitry other than circuitry embodied in a Cypress product. Nor does it convey or imply any license under patent or other rights. Cypress products are not warranted nor intended to be used for medical, life support, life saving, critical control or safety applications, unless pursuant to an express written agreement with Cypress. Furthermore, Cypress does not authorize its products for use as critical components in life-support systems where a malfunction or failure may reasonably be expected to result in significant injury to the user. The inclusion of Cypress products in life-support systems application implies that the manufacturer assumes all risk of such use and in doing so indemnifies Cypress against all charges.

Any Source Code (software and/or firmware) is owned by Cypress Semiconductor Corporation (Cypress) and is protected by and subject to worldwide patent protection (United States and foreign), United States copyright laws and international treaty provisions. Cypress hereby grants to licensee a personal, non-exclusive, non-transferable license to copy, use, modify, create derivative works of, and compile the Cypress Source Code and derivative works for the sole purpose of creating custom software and or firmware in support of licensee product to be used only in conjunction with a Cypress integrated circuit as specified in the applicable agreement. Any reproduction, modification, translation, compilation, or representation of this Source Code except as specified above is prohibited without the express written permission of Cypress.

Disclaimer: CYPRESS MAKES NO WARRANTY OF ANY KIND, EXPRESS OR IMPLIED, WITH REGARD TO THIS MATERIAL, INCLUDING, BUT NOT LIMITED TO, THE IMPLIED WARRANTIES OF MERCHANTABILITY AND FITNESS FOR A PARTICULAR PURPOSE. Cypress reserves the right to make changes without further notice to the materials described herein. Cypress does not assume any liability arising out of the application or use of any product or circuit described herein. Cypress does not authorize its products for use as critical components in life-support systems where a malfunction or failure may reasonably be expected to result in significant injury to the user. The inclusion of Cypress' product in a life-support systems application implies that the manufacturer assumes all risk of such use and in doing so indemnifies Cypress against all charges.

Use may be limited by and subject to the applicable Cypress software license agreement.

PSoC Designer™, enCoRe™, and PrISM™ are trademarks and PSoC® is a registered trademark of Cypress Semiconductor Corp. All other trademarks or registered trademarks referenced herein are property of the respective corporations.

Flash Code Protection

Cypress products meet the specifications contained in their particular Cypress PSoC Data Sheets. Cypress believes that its family of PSoC products is one of the most secure families of its kind on the market today, regardless of how they are used. There may be methods, unknown to Cypress, that can breach the code protection features. Any of these methods, to our knowledge, would be dishonest and possibly illegal. Neither Cypress nor any other semiconductor manufacturer can guarantee the security of their code. Code protection does not mean that we are guaranteeing the product as 'unbreakable'.

Cypress is willing to work with the customer who is concerned about the integrity of their code. Code protection is constantly evolving. We at Cypress are committed to continuously improving the code protection features of our products.

Contents

1. Introduction **5**

1.1 Kit Contents 5
1.2 PSoC Designer 5
1.3 PSoC Programmer 6
1.4 Additional Learning Resources 6
1.5 Document History 6
1.6 Documentation Conventions 6

2. Getting Started **8**

2.1 Kit Installation 8
2.2 PSoC Designer 11
2.3 PSoC Programmer 13
2.4 Install Hardware 13

3. Kit Operation **15**

3.1 Default Jumper Setting 15
3.2 Programming and Emulation Procedures 16
3.2.1 Programming Steps 16
3.2.2 Debugging Using Emulator 17

4. Hardware **19**

4.1 System Block Diagram 19
4.2 Functional Description 20
4.2.1 Power Supply System 20
4.2.1.1 Power Supply Jumper Settings 21
4.2.2 enCoRe V Chip 22
4.2.2.1 Pin Description of CY8C20066A-24LTXI 23
4.2.3 ISSP Connector 24
4.2.4 I2C Connector 24
4.2.5 Mini B USB Connector 25
4.2.6 Power LED 25
4.2.7 LEDs and Push Buttons 26
4.2.8 Reset Switch 26
4.2.9 Debug Port 27
4.2.10 LCD Interface 27
4.2.11 Potentiometer 27
4.2.12 LP Radio Interface 28
4.2.13 Bread Board Area 28
4.2.14 Voltage Regulator 28

5. Code Examples **29**

5.1 Code Example 1: HID Mouse 29

5.1.1 Project Description 29
5.1.2 Hardware Connections 29
5.1.3 Project Flowchart 30
5.1.4 Verify Output 30
5.2 Code Example 2: Bulk Loop 31
5.2.1 Project Description 31
5.2.2 Hardware Connections 31
5.2.3 Project Flowchart 33
5.2.4 Verify Output 33
5.3 Code Example 3: ISOC 34
5.3.1 Project Description 34
5.3.2 Hardware Connections 34
5.3.3 Project Flowchart 36
5.3.4 Verify Output 36
5.4 Code Example 4: Wireless USB 37
5.4.1 Project Description 37
5.4.2 Hardware Connections 37
5.4.2.1 Wireless USB Bridge 37
5.4.2.2 Wireless USB Keyboard 38
5.4.3 Project Flowchart 39
5.4.3.1 Wireless USB Bridge 39
5.4.3.2 Wireless USB Keyboard 40
5.4.4 Verify Output 40

A. Appendix 41

A.1 Schematic 41
A.2 Schematic - LP Radio 42
A.3 Board Layout 43
A.3.1 Top View 43
A.3.2 Bottom View 44
A.4 BOM 45
A.5 BOM - LP Radio 46

1. Introduction

Thank you for your interest in Cypress's CY3660 enCoRe™ V and enCoRe V Low Voltage (LV) kit. enCoRe V is targeted for full-speed USB human interface device (HID) applications, such as wired mouse or keyboard, and Full-Speed USB bridge for wireless HID applications. enCoRe V LV is targeted for wireless HID applications, such as wireless mouse, wireless keyboard, remote controller, and presenter tools. For debugging encore V and encore V LV, customers are requested to purchase CY3215-DK.CY3215-DK is an in-circuit emulator (ICE) that works in conjunction with the actual silicon to provide an accurate and efficient development system.

This CY3660 development kit includes hardware and software components designed to simplify your engineering development effort and illustrate the capabilities of the following devices:

enCoRe V	CY7C6431x	Full-speed USB bridge for wireless HID applications
	CY7C64345	
	CY7C6435x	
enCoRe V Low Voltage	CY7C60445	Wireless mouse, wireless keyboard, remote controller, and presenter tools
	CY7C6045x	

Getting Started chapter on page 8 describes the installation and configuration of the CY3660 enCoRe V and enCoRe V LV Development Kit. Kit Operation chapter on page 15 describes the kit operation. Hardware chapter on page 19 describes the hardware operation. Code Examples chapter on page 29 describes the code examples provided along with the kit. The Appendix chapter on page 41 section provides the schematics, BOM, protocols, and references associated with the CY3660 enCoRe V and enCoRe V LV Development Kit.

1.1 Kit Contents

The development kit includes:

- Two enCoRe V and enCoRe V LV development boards
- Two 2.4 GHz wireless modules using Cypress's WirelessUSB™ LP radio
- One LCD module for data display and prototyping
- PSoC Designer software development tool with complete set of user modules
- Four firmware examples with complete source code
- Cypress's MiniProg for programming the onboard on-chip debugger (OCD) chips
- Complete documentation
- All necessary cables, adapter, and power supplies

1.2 PSoC Designer

PSoC Designer is the integrated development environment (IDE) used to customize your PSoC application. The latest PSoC Designer has many new features, bug fixes, and support for new PSoC

devices. More information about the PSoC Designer is available in the PSoC Designer IDE Guide; go to: `<Install_directory>\Cypress\PSoC Designer\<version>\Documentation`

1.3 PSoC Programmer

The latest PSoC Programmer offers the user a simple GUI that connects to programming hardware to program and configure PSoC devices.

1.4 Additional Learning Resources

Visit http://www.cypress.com for additional learning resources in the form of data sheets, technical reference manual, and application notes.

1.5 Document History

Revision	PDF Creation Date	Origin of Change	Description of Change
**	03/02/11	CSAI	Initial version of kit guide
*A	04/05/2012	ELIN	Updated kit documents for CY3660 with the OOB review comments.

1.6 Documentation Conventions

Table 1-1. Document Conventions for Guides

Convention	Usage
`Courier New`	Displays file locations, user entered text and source code: `C:\...cd\icc\`
Italics	Displays file names and reference documentation: Read about the *sourcefile.hex* file in the *PSoC Designer User Guide*.
[**Bracketed, Bold**]	Displays keyboard commands in procedures: [**Enter**] or [**Ctrl**] [**C**]
File > Open	Represents menu paths: File > Open > New Project
Bold	Displays commands, menu paths and icon names in procedures: Click the **File** icon and then click **Open**.
Times New Roman	Displays an equation: 2 + 2 = 4
Text in gray boxes	Describes cautions or unique functionality of the product.

2. Getting Started

This chapter describes the installation and configuration of the CY3660 enCoRe V and V LV kit.

2.1 Kit Installation

To install the kit software, follow these steps:

1. Insert the kit CD/DVD into the CD/DVD drive of your PC. The CD/DVD is designed to auto-run and the kit installer startup screen appears

   You can also download the latest kit installer from http://www.cypress.com/go/CY3660. Download the kit installer ISO file and create an installer CD/DVD or extract the ISO using Ironware and install the executable.
2. Click **Install CY3660 enCoRe V/LV DVK** to start the installation, as shown in Figure 2-1.

   Figure 2-1. Kit Installer Startup Screen

Note If auto-run does not execute, double-click *cyautorun.exe* in the root directory of the CD/DVD, as shown in Figure 2-2.

Figure 2-2. Root Directory of the CD/DVD

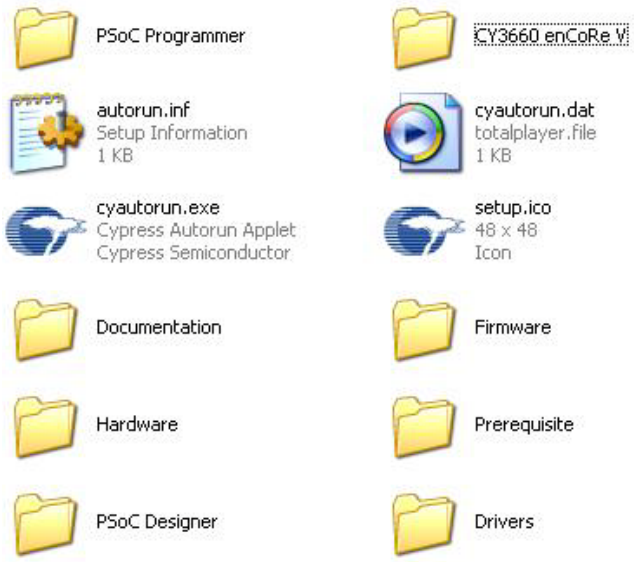

3. On the startup screen, click **Next** to start the installer.
4. The **InstallShield Wizard** screen appears. The default setup location is shown on the InstallShield Wizard screen. You can change the location using **Change**, as shown in Figure 2-3.
5. Click **Next** to launch the kit installer.

Figure 2-3. InstallShield Wizard

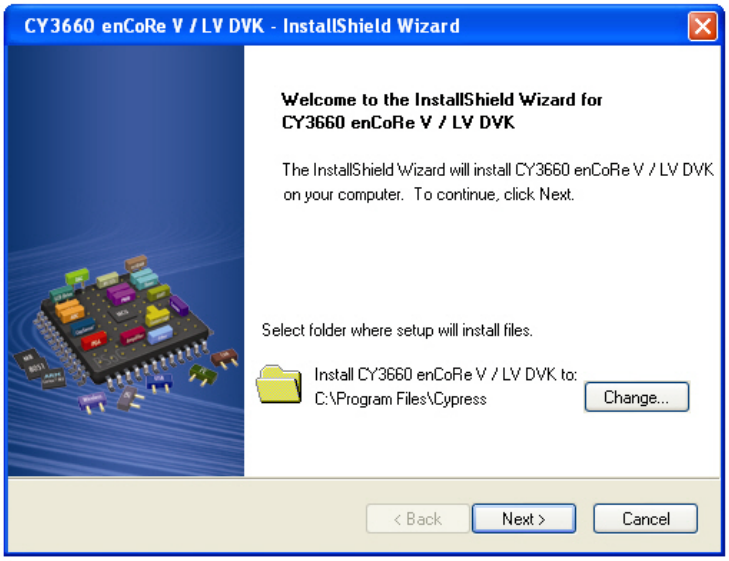

6. In the **Product Installation Overview** screen, select the installation type that best suits your requirement. The drop-down menu has three options - **Typical, Complete,** and **Custom,** as shown in Figure 2-4.
7. Click **Next** to start the installation.

Figure 2-4. Installation Type Options

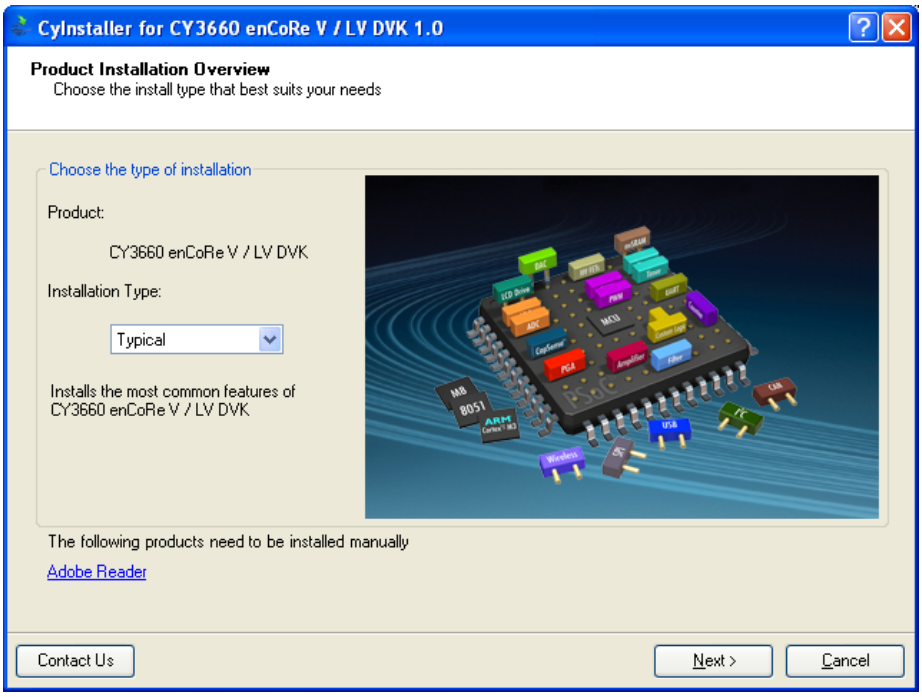

8. When the installation begins, a list of packages appear on the **Installation Page**. A green check mark appears next to every package that is downloaded and installed, as shown in Figure 2-5.
9. Wait until all the packages are downloaded and installed successfully.

Figure 2-5. Installation Page

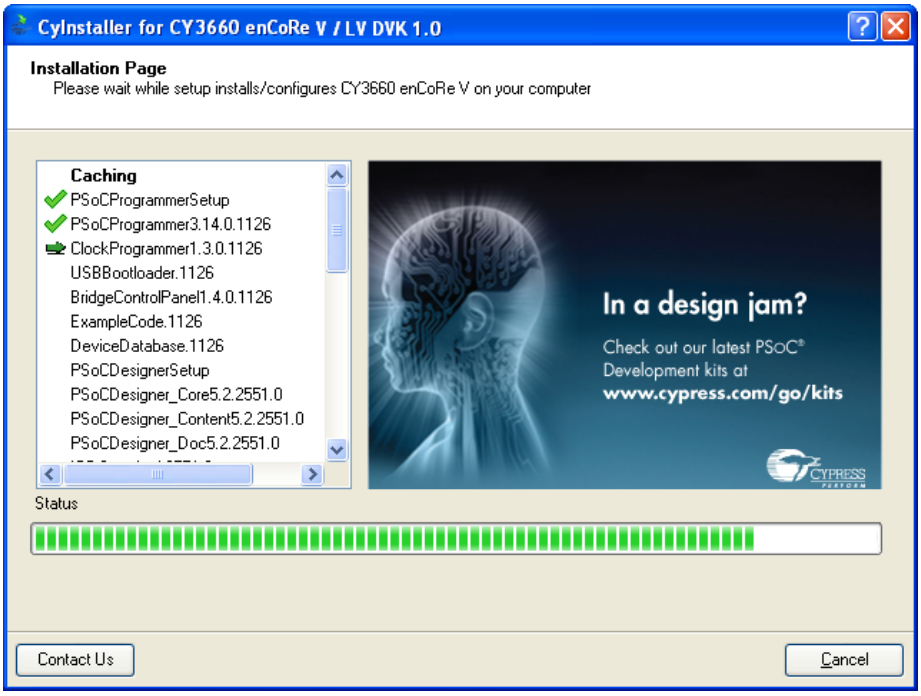

10. Click **Finish** to complete the installation.

Figure 2-6. Installation Completion Page

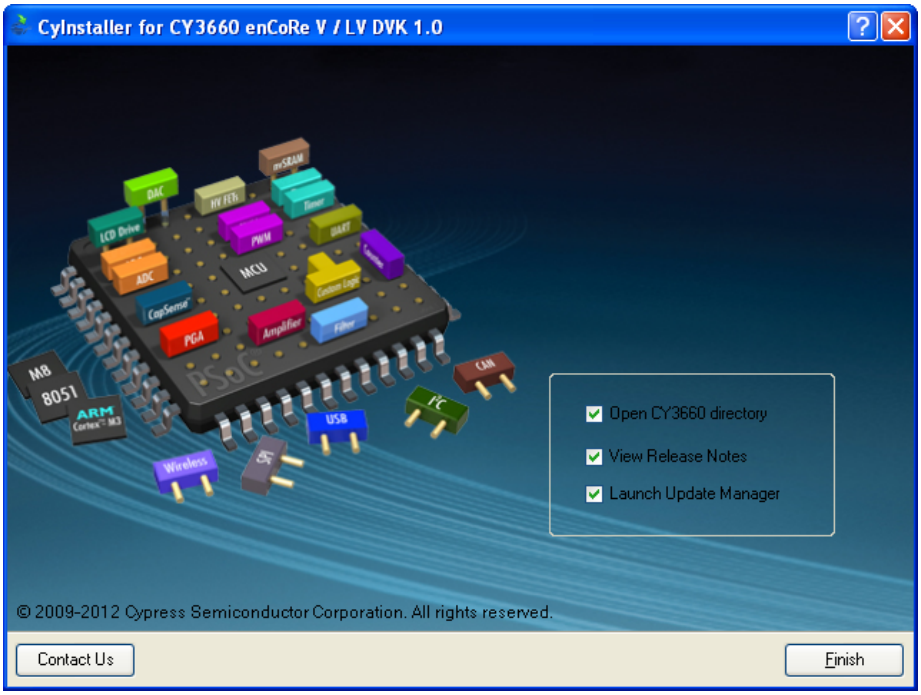

2.2 PSoC Designer

11. Click **Start** > **All Programs** > **Cypress** > **PSoC Designer <ver.>** > **PSoC Designer <ver.>**.
12. Click **File** > **Create New Project** to create new project; click **File** > **Open Project/Workspace** to work with an existing project.

Figure 2-7. PSoC Designer Interconnect View

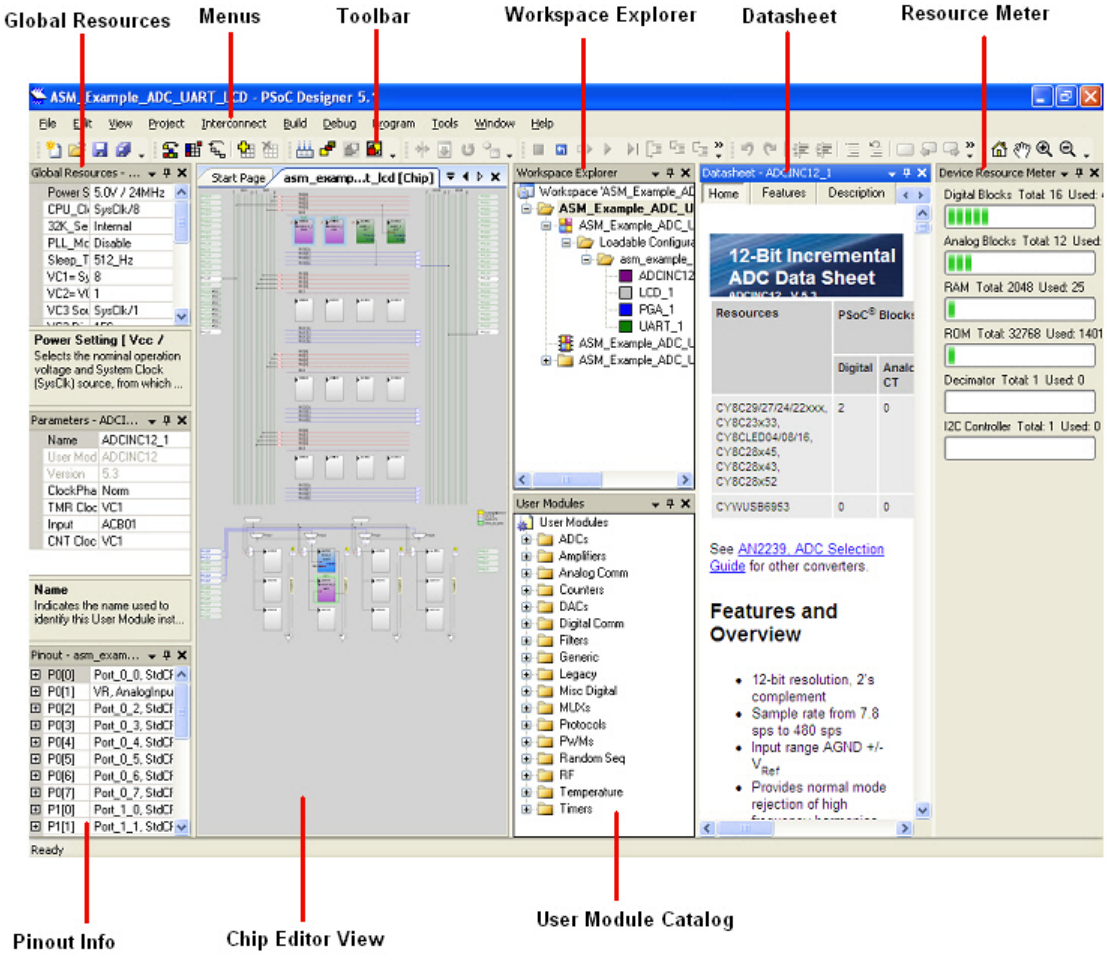

13. To experiment with the code examples, go to Code Examples chapter on page 29.

Note For more details on PSoC Designer, see the PSoC Designer IDE Guide at: `<Install_directory>\Cypress\PSoC Designer\<version>\Documentation`.

2.3 PSoC Programmer

1. Click **Start** > **All Programs** > **Cypress** > **PSoC Programmer <ver.>** > **PSoC Programmer <ver.>**.
2. Select the MiniProg from the port selection, as shown in Figure 2-8.

Figure 2-8. PSoC Programmer Window

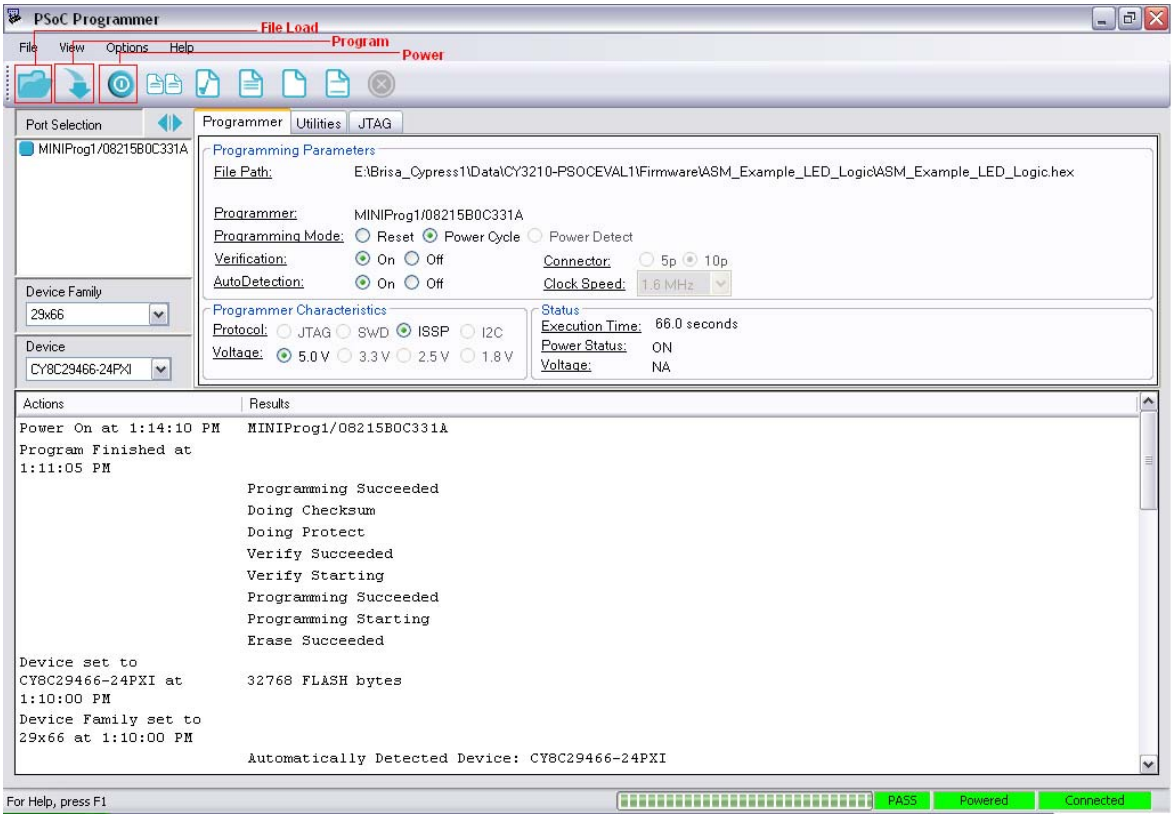

3. Click the **File Load** button from Programmer menu bar navigate and select hex file to load.
4. Use **Program** button to program the hex file on to the chip.
5. When programming is successful, Programming Succeeded appears in the Actions pane.
6. Close PSoC Programmer.

Note For more details on PSoC Programmer, go to Programmer user guide at: `<Install_directory>\Cypress\Programmer\<version>\Documents`.

2.4 Install Hardware

No hardware installation is required for this kit.

3. Kit Operation

3.1 Default Jumper Setting

The following is the default jumper setting for the CY3660 enCoRe V DVK board.

- J1, place a jumper
- J2, place a jumper between VREG and VDD
- J5, place a jumper between Pin 2 and 3.3 V
- J12, place a jumper
- J13, place a jumper
- Leave other jumpers open

Figure 3-1. CY3660 enCoRe V DVK Board

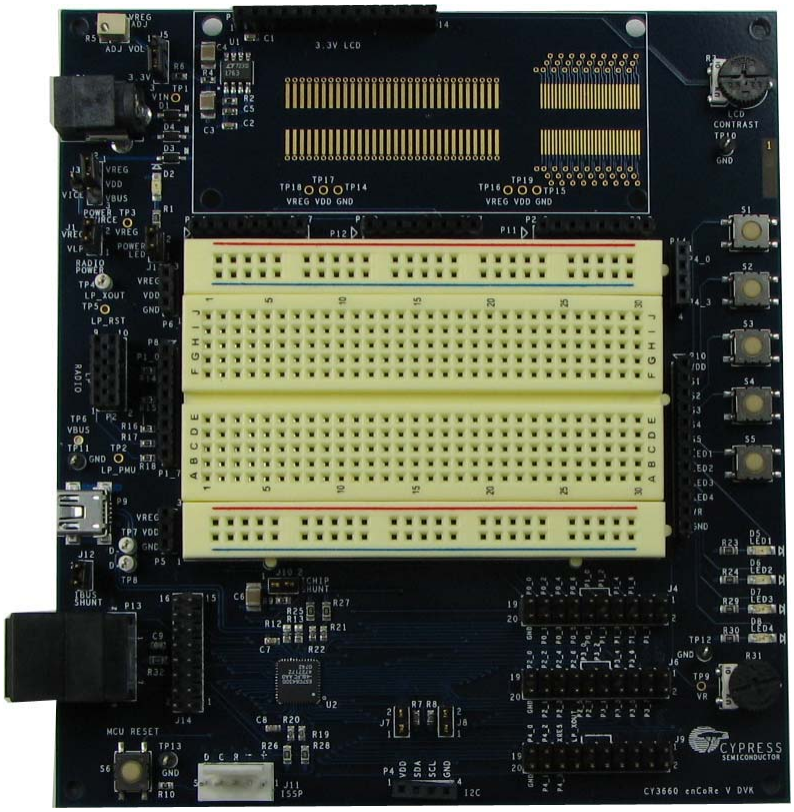

3.2 Programming and Emulation Procedures

The following procedure provides a quick programming and emulation overview.

Note: The PSoC MiniProg or the ICE-Cube is used for programming. The ICE-Cube is required for emulation. The ICE-Cube is available in the PSoC development kit and can be ordered from Cypress's online store (PSoC Development Kit, CY3215-DK).

3.2.1 Programming Steps

1. Launch "PSoC Programmer". If the LP Radio Module is connected to P2, remove it before the next step to avoid 5 V being applied to the LP Radio Module.
2. Connect the USB cable to the PSoC MiniProg and to the PC.
3. Connect the PSoC MiniProg to the 5-pin ISSP header on the CY3660 enCoRe V DVK board.

Figure 3-2. PSoC MiniProg

4. In PSoC Programmer, click **File** > **Load** to load the desired binary (hex) file.
5. Select the MiniProg port.
6. For Programming Mode, select **Power Cycle**. Ensure the AC adapter is removed from P1, and the USB cable is unplugged from P9.
7. From the Device Family menu, select **64300**.
8. From the Device menu, select **CY7C64300**.
9. Click **Program**. PSoC Programmer goes through programming and verification modes.
10. When programming is finished, remove the MiniProg from the CY3660 enCoRe V DVK board.

Figure 3-3. PSoC Programmer

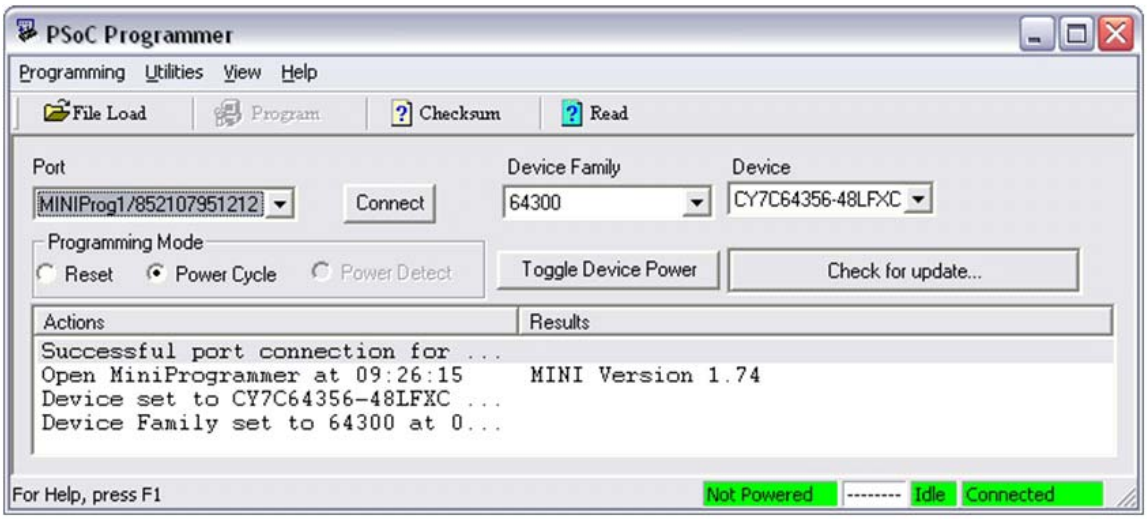

3.2.2 Debugging Using Emulator

The steps for emulation are as follows:

1. Launch the desired .SOC project file project from the `PSoC Designer\Examples\CY7C64300\<example name>\[PSoC Project or application name\]`.
2. Connect one end of the blue CAT 5e cable to the ICE-Cube.
3. Connect the other end of the blue CAT 5e cable to the CY3660 enCoRe V DVK board.
4. Select **Config** > **Generate Application**, or click the **Generate Application** icon.
5. Select **Build** > **Build**, press [F7], or select the above icon.
6. Configure the debug port setting. Select **Project** > **Settings** > **Debugger** then select USB as the ICE connected to port.
7. Select **Build** > **Start Debug**, press [CTL] + [F5], or select the **Start Debug** icon.
8. Select **Debug** > **Connect**, or select the **Connect** icon.
9. Select **Debug** > **Download to Emulator**, or select the **Download to Emulator** icon.
10. Select **Debug** > **Go**, press [F5], or select the **Go** icon.

Figure 3-4. PSoC Designer's Toolbar

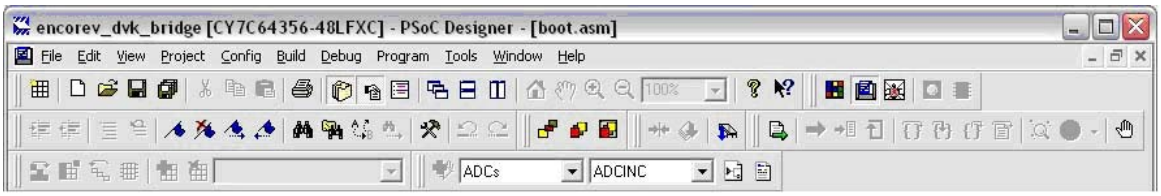

4. Hardware

4.1 System Block Diagram

The CY3660 enCoRe V and enCoRe V LV DVK has the following sections:

- Power supply system
- enCoRe V Chip
- ISSP Connector
- I2C Connector
- Mini B USB Connector
- Power LED
- LEDs and Push Buttons
- Reset Switch
- Debug Port
- LCD Interface
- Potentiometer
- LP Radio interface
- Bread board Area
- Voltage Regulator

Figure 4-1. System Block Diagram

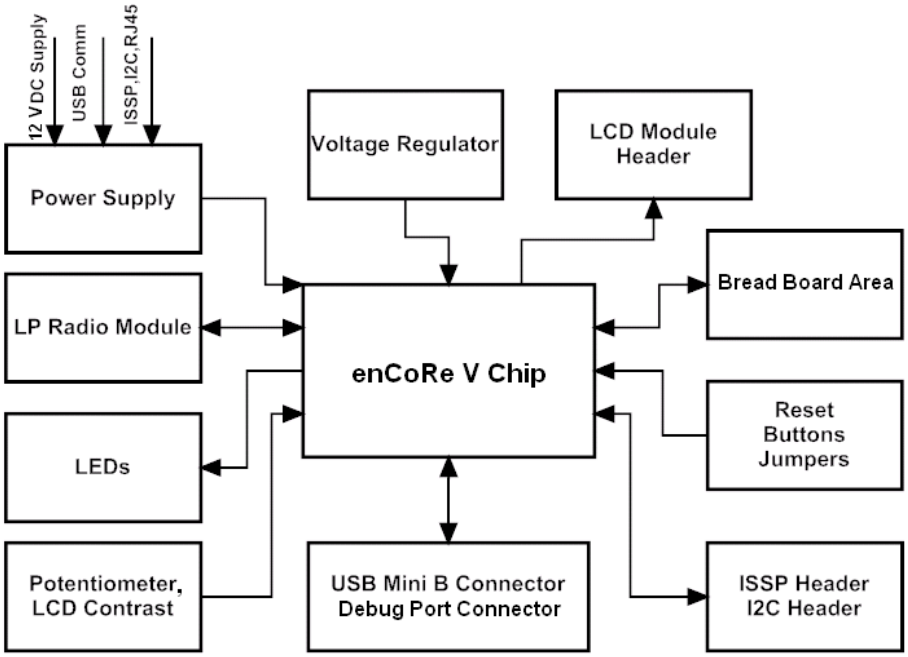

4.2 Functional Description

The following figure shows the different functional blocks on the CY3660 enCoRe V and LV Development board.

Figure 4-2. Functional Blocks of CY3660 enCoRe V / LV Development Board

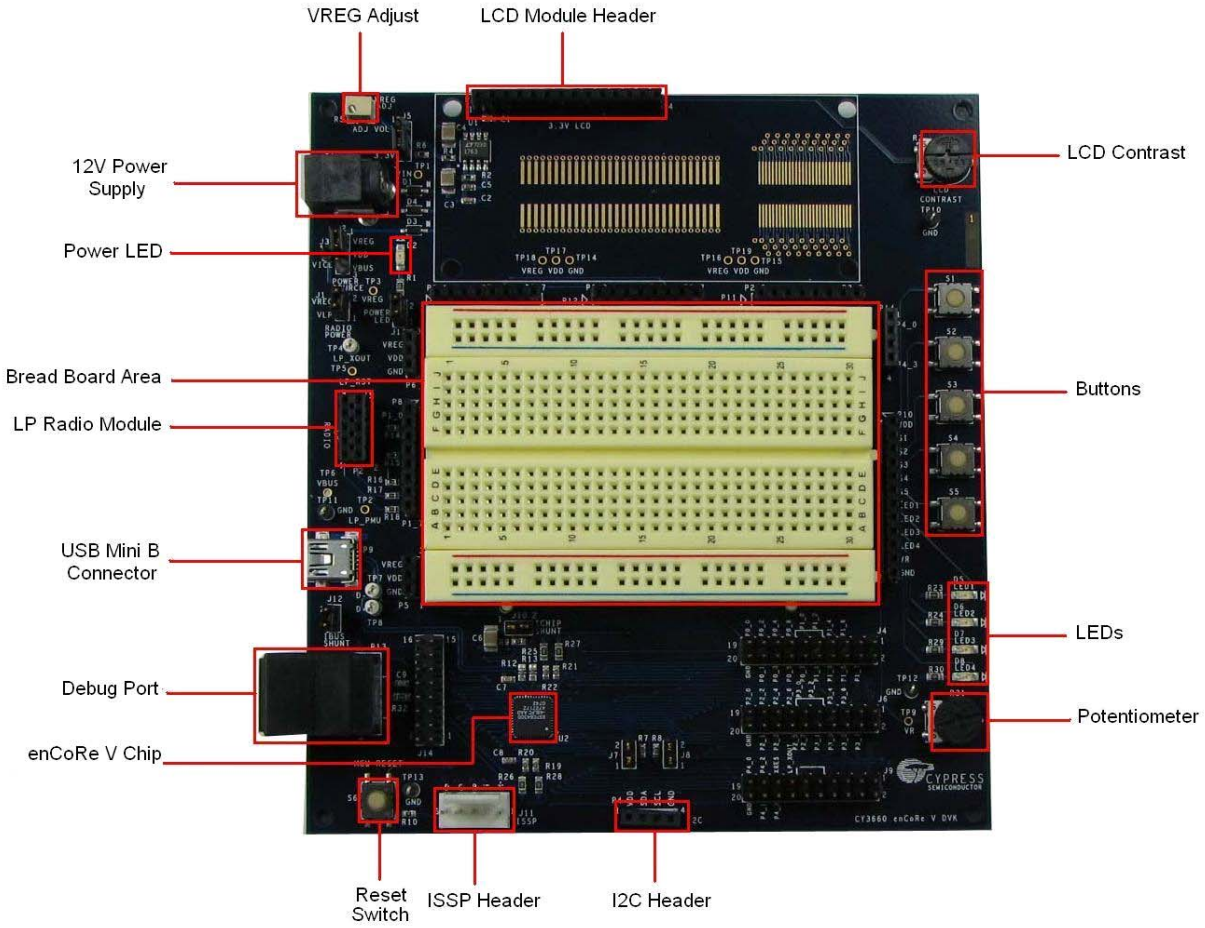

4.2.1 Power Supply System

The power supply system on this board is versatile. It takes input supply from the following sources:

- 12 V DC input
- USB power from communications section
- Power from ISSP header
- Power from I2C header
- Power from debug port - RJ45

Figure 4-3. Power Supply System Block Diagram

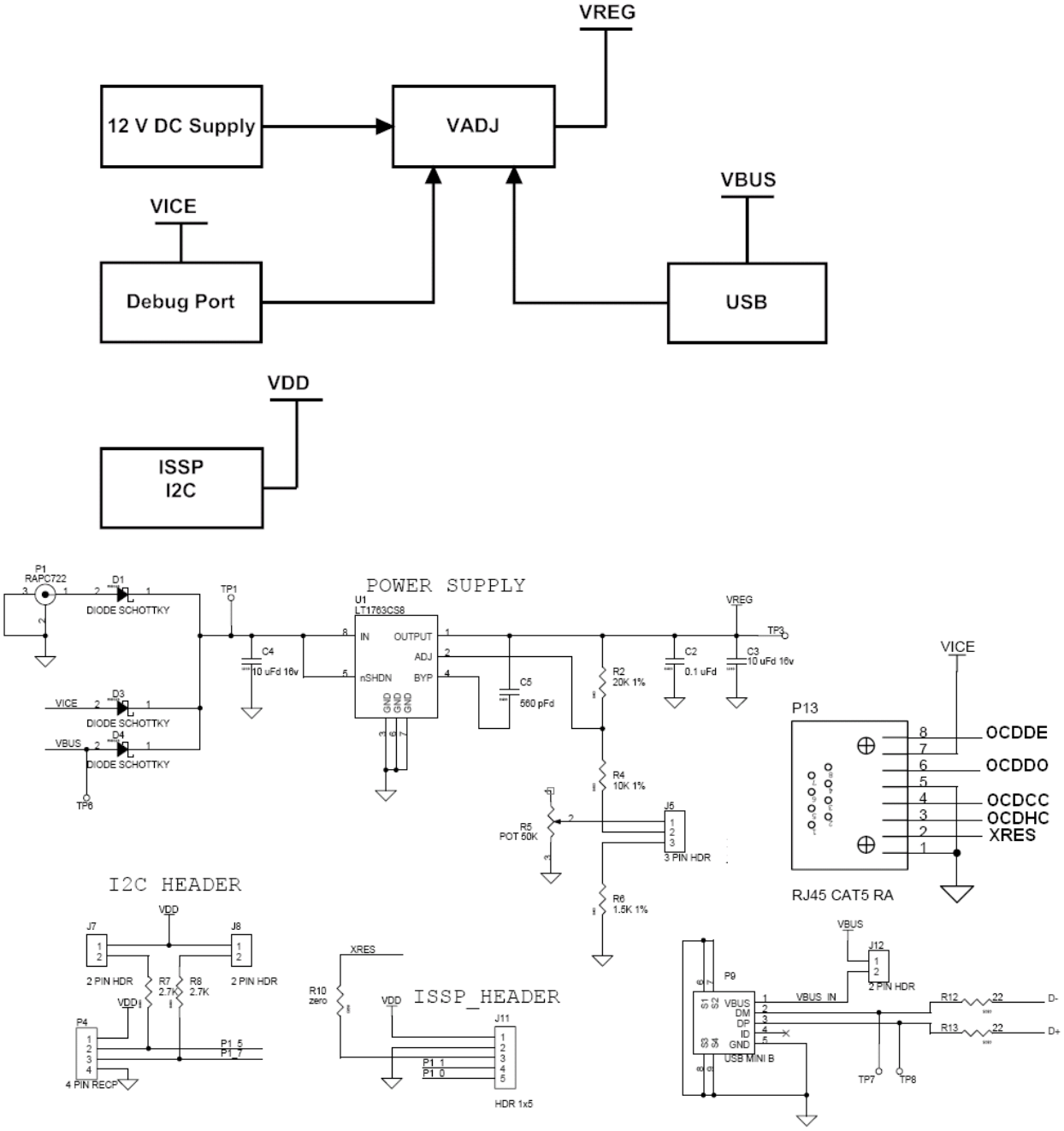

4.2.1.1 *Power Supply Jumper Settings*

The following is the default jumper setting for the CY3660 board.

- J1, place a jumper
- J2, place a jumper between VREG and VDD
- J5, place a jumper between pin 2 and 3.3.
- J12, place a jumper
- J13, place a jumper
- Leave other jumpers open

4.2.2 enCoRe V Chip

Cypress's enCoRe V Full-Speed USB peripheral microcontrollers (MCUs) and enCoRe V LV (low voltage) wireless MCUs are highly-integrated families with up to 32 KB of flash memory, three 16-bit timers, and up to 36 general purpose I/Os (GPIOs) to accommodate enhanced multimedia features in human interface devices (HIDs). The families are supported by the CY3660 enCoRe V / LV development kit, which shortens the design time of laser mice, gaming controllers and keyboards, wireless dongles, remote controls, mobile handset accessories, and point-of-sales devices.

The in-system reprogrammable enCoRe V and enCoRe V LV MCUs provide design flexibility with a 10-bit ADC, flash memory with EEPROM emulation, and small form-factor packages. The enCoRe V devices also include eight USB endpoints. The enCoRe V LV family operates in the full range of 1.7 V to 3.6 V, with low power consumption for prolonged battery life in wireless applications, especially when paired with Cypress's low-power WirelessUSB™ LP 2.4-GHz radio. All enCoRe MCUs include Cypress's patented crystal-less oscillator and integrated pull-up resistor to reduce component count and BOM cost.

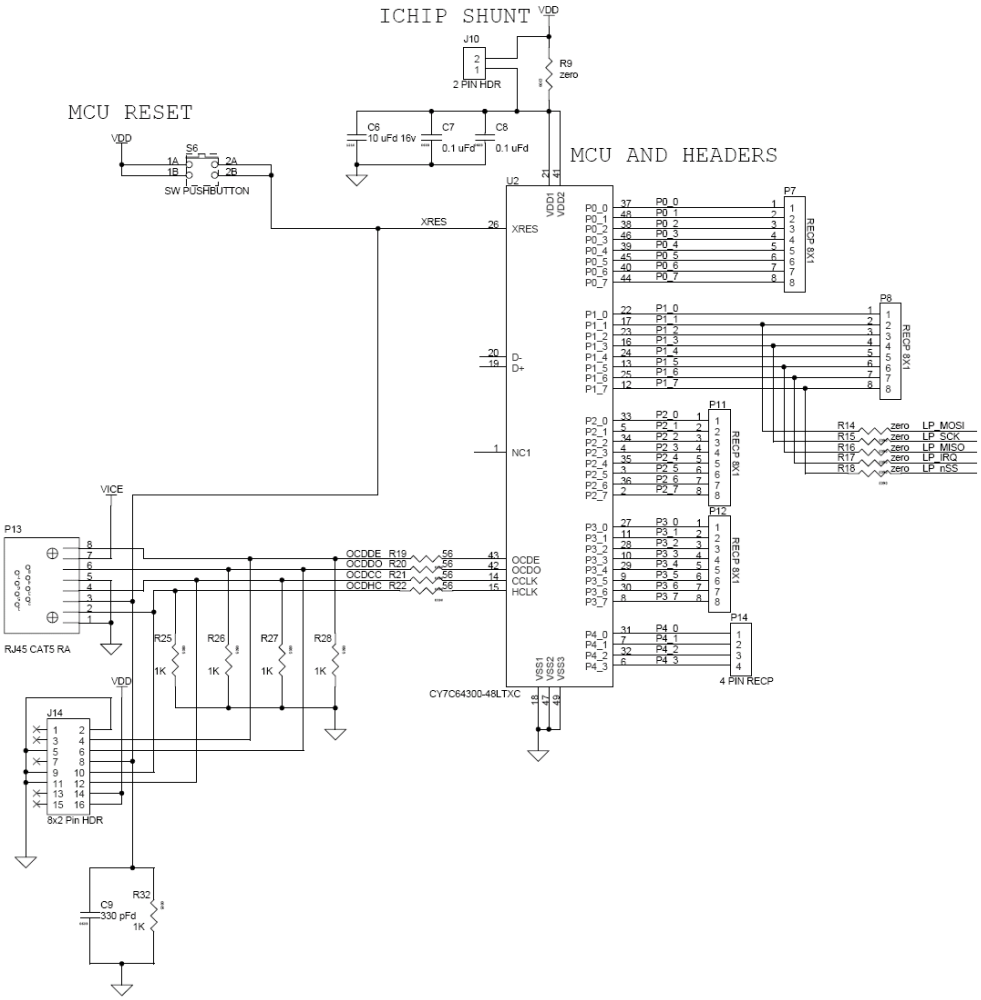

4.2.2.1 Pin Description of CY8C20066A-24LTXI

Pin No.	Name	Description	Connected to
1	NC	No connection	
2	P2[7]	Digital I/O	P11
3	P2[5]	Digital I/O, crystal out (Xout)	P11
4	P2[3]	Digital I/O, crystal in (Xin)	P11
5	P2[1]	Digital I/O	P11
6	P4[3]	Digital I/O	P14
7	P4[1]	Digital I/O	P14
8	P3[7]	Digital I/O	P12
9	P3[5]	Digital I/O	P12
10	P3[3]	Digital I/O	P12
11	P3[1]	Digital I/O	P12
12	P1[7]	Digital I/O, I2C SCL, SPI SS	P8
13	P1[5]	Digital I/O, I2C SDA, SPI MISO	P8
14	NC	No connection	
15	NC	No connection	
16	P1[3]	Digital I/O, SPI CLK	P8
17	P1[1][5, 6]	Digital I/O, ISSP CLK, I2C SCL, SPI MOSI	P8
18	VSS	Supply ground	
19	D+	USB	P9
20	D–	USB	P9
21	VDD	Supply voltage	
22	P1[0][5, 6]	Digital I/O, ISSP DATA, I2C SDA, SPI CLK	P8
23	P1[2]	Digital I/O	P8
24	P1[4]	Digital I/O, optional external clock input (EXTCLK)	P8
25	P1[6]	Digital I/O	P8
26	Ext Reset	Active high external reset with internal pull down	
27	P3[0]	Digital I/O	P12
28	P3[2]	Digital I/O	P12
29	P3[4]	Digital I/O	P12
30	P3[6]	Digital I/O	P12
31	P4[0]	Digital I/O	P14
32	P4[2]	Digital I/O	P14
33	P2[0]	Digital I/O	P11
34	P2[2]	Digital I/O	P11
35	P2[4]	Digital I/O	P11
36	P2[6]	Digital I/O	P11
37	P0[0]	Digital I/O	P7
38	P0[2]	Digital I/O	P7
39	P0[4]	Digital I/O	P7
40	P0[6]	Digital I/O	P7

Pin No.	Name	Description	Connected to
41	VDD	Supply voltage	
42	NC	No connection	
43	NC	No connection	
44	P0[7]	Digital I/O	P7
45	P0[5]	Digital I/O	P7
46	P0[3]	Digital I/O	P7
47	VSS	Supply ground	
48	P0[1]	Digital I/O	P7
	VSS	Ensure the center pad is connected to ground	

4.2.3 ISSP Connector

In-system serial programmer (ISSP) is used to program the device using the MiniProg programmer device and the USB cable. This interface is faster and the ISSP/I2C programming is done through the 5-pin connector.

The pin mapping for the ISSP connector is shown in the following figure.

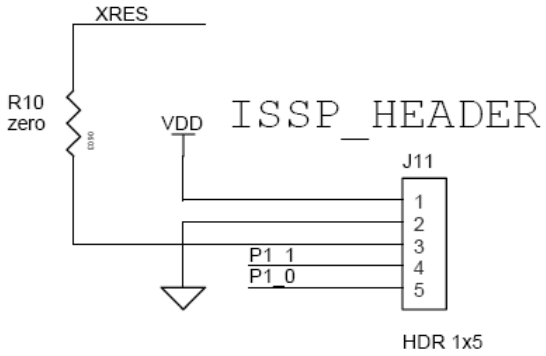

4.2.4 I2C Connector

CY3660 enCoRe V and LV development board is provided with an I2C connector.

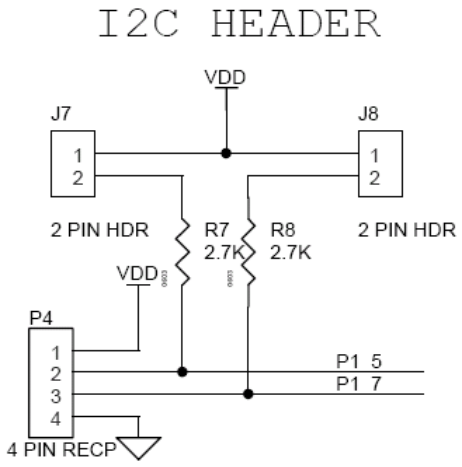

4.2.5 Mini B USB Connector

The USB Mini B Connector is a mini port that communicates between the PC and the board. It is also used to power up the controller, supplying 5 V voltage. Protection diode D5 is present so that the 5 V from the board does not flow to the USB connector. CY3660 DK is mainly used for HID applications, USB is used to interface the device.

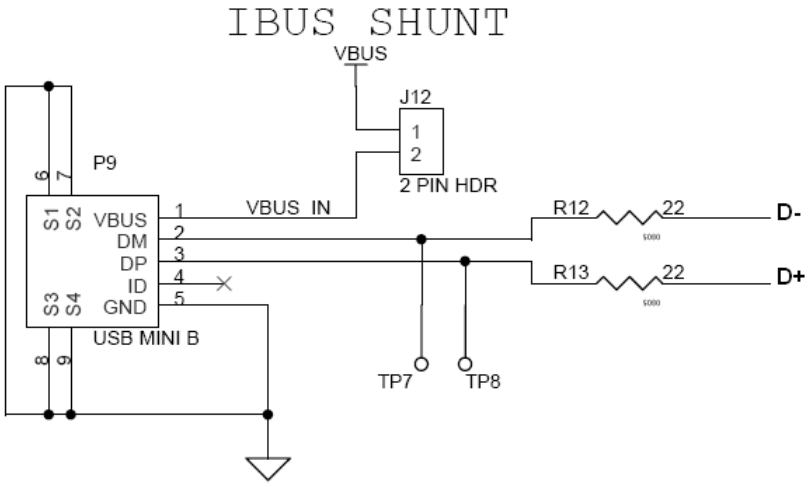

4.2.6 Power LED

The power LED D2 (Red) is used to indicate the power status of the board.

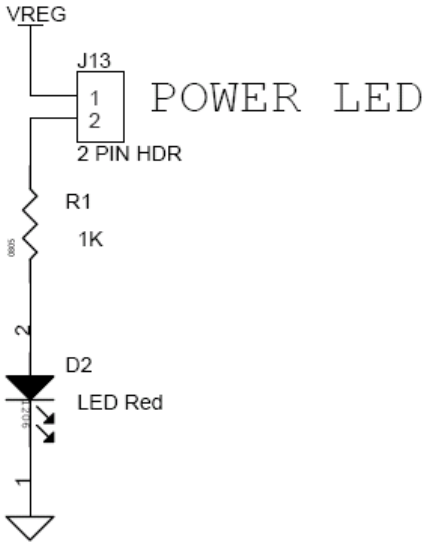

4.2.7 LEDs and Push Buttons

These buttons are provided to supply input to the board.

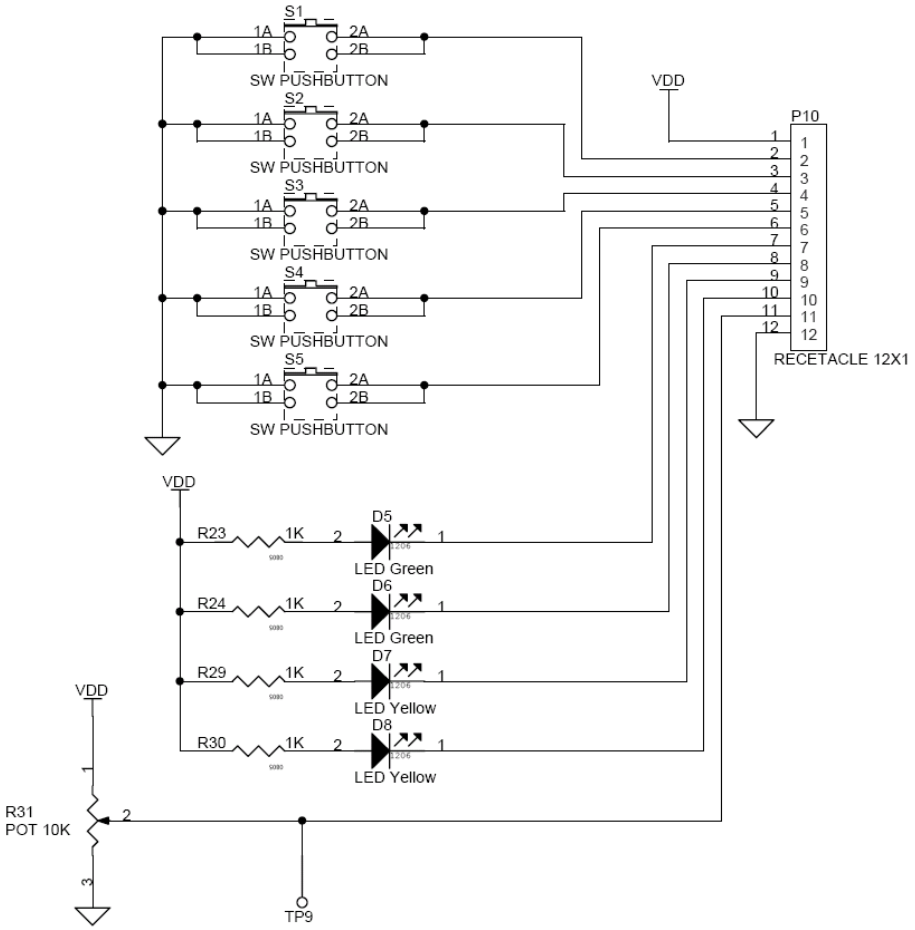

4.2.8 Reset Switch

This switch resets enCoRe V back to its original state.

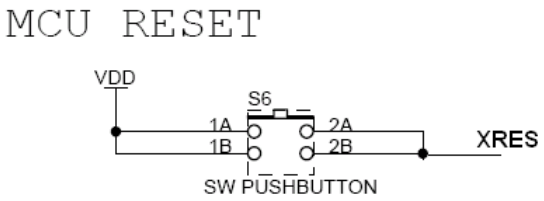

4.2.9 Debug Port

The ICE-Cube debugger allows to debug and view the content of specific memory locations. The ICE-Cube debugger can be connected to the RJ45 connector on the board to connect to the on-chip debugger (OCD) device to enable debugging.

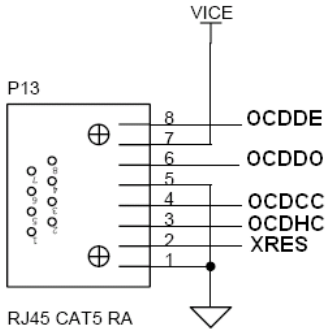

4.2.10 LCD Interface

The LCD interface connector is used to connect an LCD. It is a two-line 16-character LCD. The contrast of the LCD can be varied using the LCD contrast potentiometer.

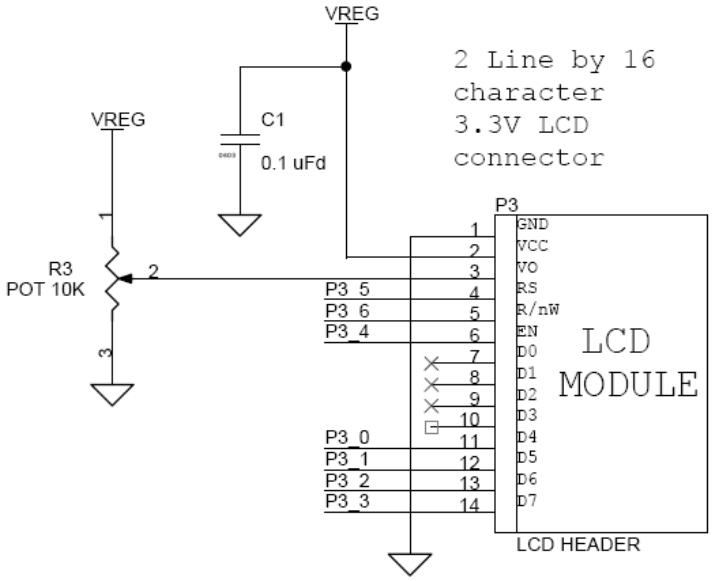

4.2.11 Potentiometer

This potentiometer is used for varying the voltage to the ADC input.

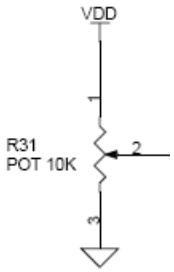

4.2.12 LP Radio Interface

This interface is used to plug the WirelessUSB LP radio module.

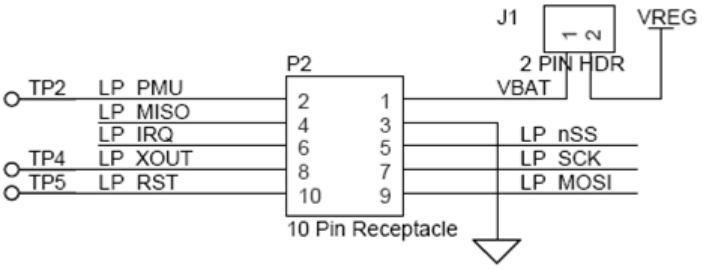

4.2.13 Bread Board Area

This area on the board is used for prototyping.

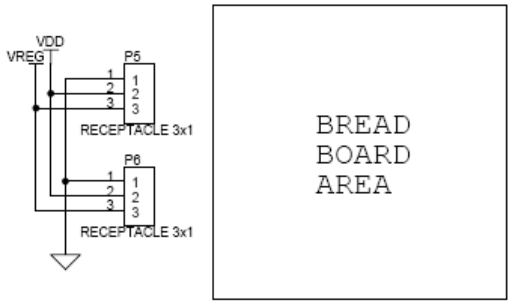

4.2.14 Voltage Regulator

The CY3660 enCoRe V and enCoRe V LV DVK board has a voltage regulator; a 50-K potentiometer is used to vary the output from the IC U1. VREG can be varied from 1.63 V to 3.66 V using this potentiometer. Connect a jumper between pins 1 and 2 of J5 to use this regulated power VREG.

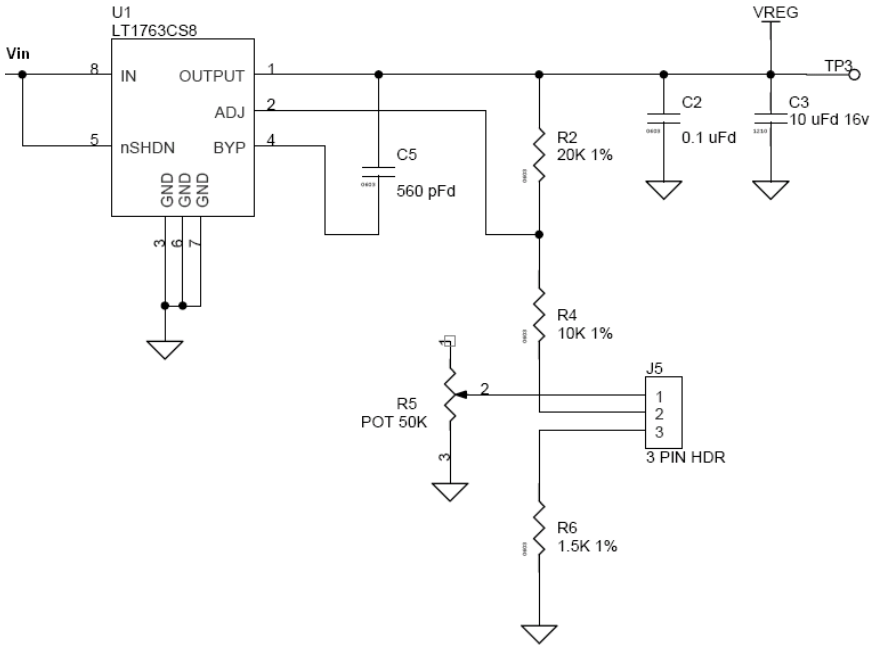

5. Code Examples

5.1 Code Example 1: HID Mouse

5.1.1 Project Description

This project demonstrates the basic functionality of a USB HID Mouse. A complete USB HID descriptor is provided, which allows enumerations on any USB host that supports a HID device.

5.1.2 Hardware Connections

1. Wire up the S1 button. On the CY3660 enCoRe V DVK board, attach a wire from P0_0 on P7 to S1on P10.
2. Place a jumper on J12.
3. Place a jumper between VDD and VREG on J2.
4. J5 is used to select the fixed 3.3 V VREG or Adjustable VREG from 3.66 V to 1.63 V. In the beginning, it is suggested to use fixed 3.3 V VREG.
5. Connect the mini-B side of the USB A/Mini-B cable to the CY3660 enCoRe V DVK board.
6. Connect the A side of the USB A/Mini-B cable to the PC.

Figure 5-1. Board Details

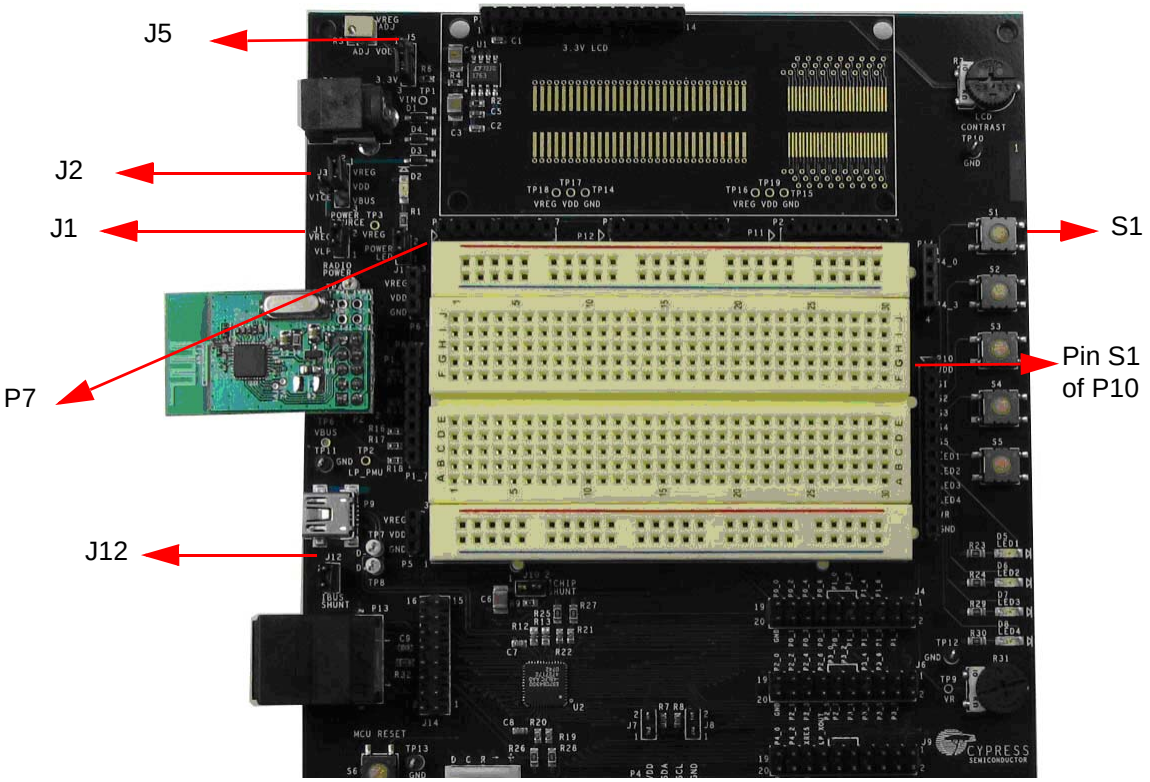

5.1.3 Project Flowchart

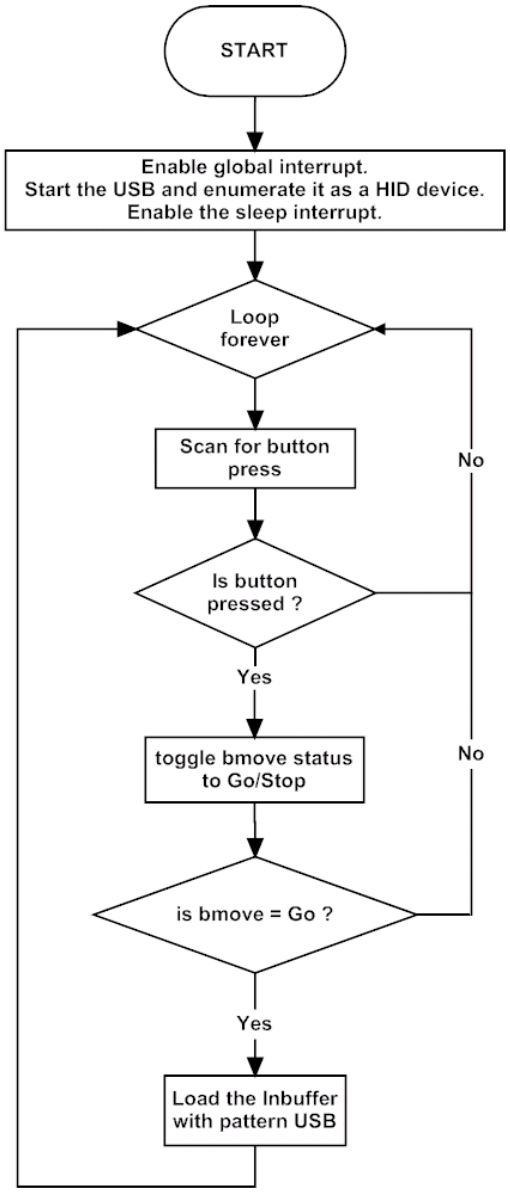

5.1.4 Verify Output

The HID_Example enumerates in the Device Manager as a HID-compliant device. It transmits mouse down and mouse movement commands to the PC over the USB interrupt pipe. Press button S1 on the DVK board to toggle the drawing in Paint. The word ‘USB’ is drawn when the S1 button is pressed. Press the S1 button again to stop drawing. When using any of the enCoRe V examples provided, a USB analyzer can be used to inspect the USB transactions.

5.2 Code Example 2: Bulk Loop

5.2.1 Project Description

The BULK_Example shows the simplicity of accessing SRAM directly from the enCoRe V USB SIE. This example uses the BulkLoop application to send and receive data over the Bulk IN and OUT endpoints.

5.2.2 Hardware Connections

Program the CY3660 enCoRe V DVK board with the hex file located at <installed directory>\Cypress\CY3660 enCoRe V DVK\<ver>\Firmware\BULK_Example\BULK_FW\.

1. Select **Program > Program Part** in PSoC Designer
2. Place a jumper on J12.
3. Place a jumper between VDD and VREG on J2.
4. J5 is used to select the fixed 3.3 V VREG or Adjustable VREG from 3.66 V to 1.63 V. In the beginning, it is suggested to use fixed 3.3 V VREG.
5. Connect the mini-B side of the USB A/Mini-B cable to the CY3660 enCoRe V DVK board.
6. Connect the A side of the USB A/Mini-B cable to the PC.
7. After connecting USB cable to PC, Windows Hardware wizard pops up.In Win XP(32/64) OS. Select **"Yes, this time only"** and click **Next**. In Windows Vista/7 machine choose "Browse My computer for driver software"
8. Choose **"Install from a list or specific location"** and click **Next**.Then choose **"Don't search. I will choose the driver to install"** and click **Next**.Select **"USB Controllers"** from the list of devices.In the next window select Click **Have Disk**.
9. To select the driver matching VID/PID in the *BULK_FW.hex* select the *cyusb3660dvk.inf* file located at *<Installed_Directory>\Cypress\CY3660 enCoRe V DVK\ <version>\Drivers*. In Windows Vista/7 machines browse directly after step-6 to matching Driver information file as mentioned below. User need to select the *cyusb3660dvk.inf* and *cyusb.sys* file combination relevant to Windows OS version to which the USB cable is connected. Following are paths:
   a. WinXP-32-bit:wxp\x86
   b. WinXP-64-bit:wxp\x64
   c. WinVista-32-bit:wlh-vista\x86
   d. WinVista-64-bit:wlh-vista\x64
   e. Win7-32-bit:wlh-win7\x86
   f. Win7-64-bit:wlh-win7\x64
10. Open Device Manager by typing **"devmgmt.msc"** in Windows-->Start Button-->Run. Expand the list of USB controllers and observe enCoRe V DVK enumerated and listed as **"Cypress enCoRe V LV DVK Bulk Example(3.4.5.000)".**
11. The *cyusb3660dvk.inf* and *cyusb.sys*, and *cyusb3660dvk.cat* are signed driver packages for all 6 Windows OS platforms-WinXP(32/64),Win Vista(32/64) and Win-7(32/64).Any modification to the *cyusb3660dvk.inf* file would result in Invalid driver signature. The supplied package should be used without modification to validate only the examples provided with the kit.
12. .The cyusb3660dvk.inf(italic) contains Bulk examples VID/PID-0x04B4/0x07B3.To modify the .INF during development reboot PC and press F8.Select **"Disable Driver signature enforcement"**.This will enable loading of unsigned driver packages in Windows PC.This modification will not propogate till next reboot.Windows Hardware certification program is designed to certify USB drivers for custom designed hardware based on Cypress Encore V IC. The VID/PID combination used in BULK_Example firmware and driver package(*cyusb3660dvk.inf and*

cyusb.sys) should be modified before submission to Microsoft.Refer to "Windows Hardware Certification" for more details.

Note: If the driver matching sequence (selecting *cyusb3660dvk.inf* and *cyusb.sys* of anyone of examples-Bulk Example and ISOC Example is performed earlier then the remaining example's step 6-9 can be avoided as the *cyusb3660dvk.inf* file contains VID/PID entries of both these firmware examples.

Figure 5-2. Board Details

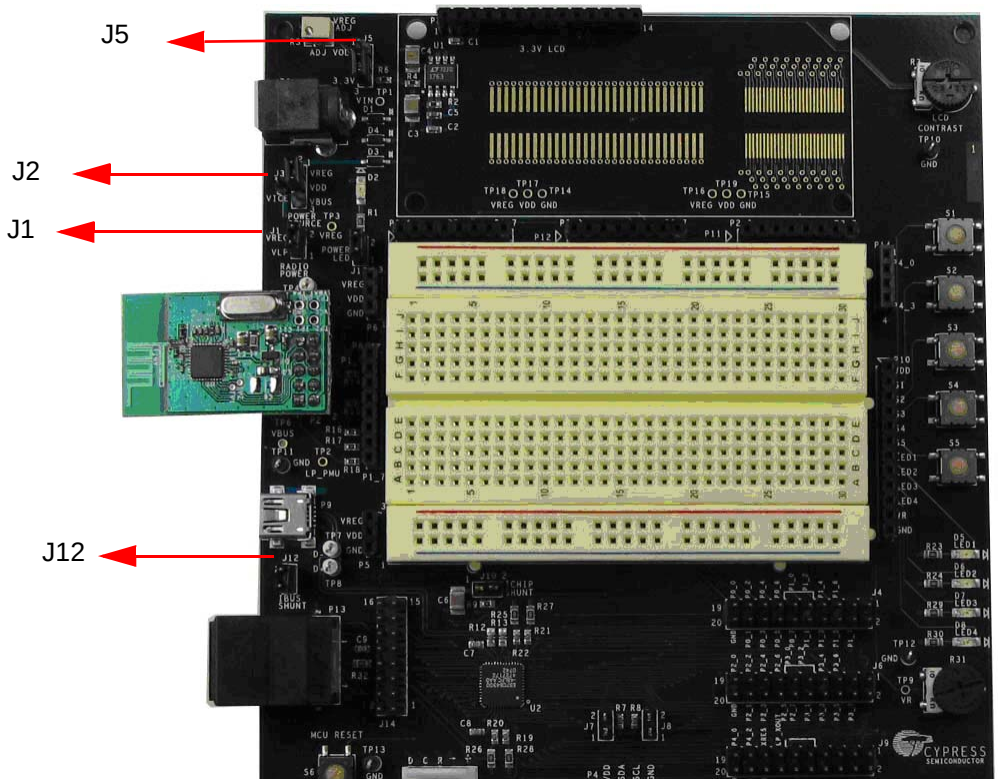

5.2.3 Project Flowchart

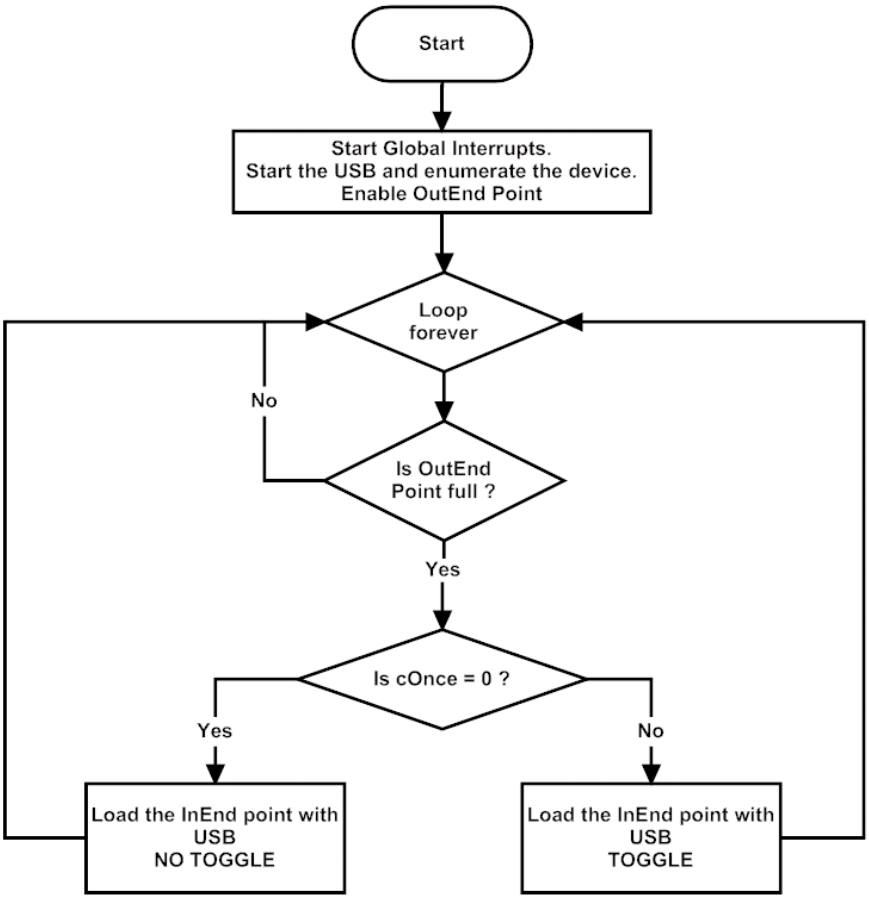

5.2.4 Verify Output

- Launch the BulkLoop.exe application located at <installed directory>:\Cypress\CY3660 enCoRe V DVK\1.0\Examples\BULK_Example\PC_Host_App\BulkLoop.exe
- Using the BulkLoop.exe application provided, data can be transferred to and from the CY3660 enCoRe V DVK board.

5.3 Code Example 3: ISOC

5.3.1 Project Description

The ISOC_Example shows how to create an alternate interface for isochronous applications. This example uses the Streamer application to send data over the ISOC IN Endpoint.

5.3.2 Hardware Connections

Program the CY3660 enCoRe VDVK board with the hex file located at <installed directory>\Cypress\CY3660 enCoRe V DVK\<ver>\Firmware\ISOC_Example\ISOC_FW\.

1. Select **Program > Program Part** in PSoC Designer
2. Place a jumper on J12.
3. Place a jumper between VDD and VREG on J2.
4. J5 is used to select the fixed 3.3 V VREG or Adjustable VREG from 3.66 V to 1.63 V. In the beginning, it is suggested to use fixed 3.3 V VREG.
5. Connect the mini-B side of the USB A/Mini-B cable to the CY3660 enCoRe VDVK board.
6. Connect the A side of the USB A/Mini-B cable to the PC.
7. After connecting USB cable to PC, Windows Hardware wizard pops up .In Win XP(32/64) OS select **"Yes, this time only"** and click **Next**.In Windows Vista/7 machine choose **"Browse My computer for driver software"**.
8. Choose **“Install from a list or specific location”** and click **Next**. Then choose **“Don’t search. I will choose the driver to install”** and click **Next**.Select **"USB Controllers"** from the list of devices.In the next window select Click **“Have Disk”**.
9. To select the driver matching VID/PID in the ISOC_FW.hex select the *cyusb3660dvk.inf* file located at *<Installed_Directory>\Cypress\CY3660 enCoRe V DVK\<version>\Drivers*. In Windows Vista/7 machines browse directly after step-6 to matching Driver information file as mentioned below. User need to select the *cyusb3660dvk.inf* and *cyusb.sys* file combination relevant to Windows OS version to which the USB cable is connected. Following are paths:
   a. WinXP-32-bit:wxp\x86
   b. WinXP-64-bit:wxp\x64
   c. WinVista-32-bit:wlh-vista\x86
   d. WinVista-64-bit:wlh-vista\x64
   e. Win7-32-bit:wlh-ws\x86
   f. Win7-64-bit:wlh-ws\x64
10. Open Device Manager by typing **“devmgmt.msc”** in Windows-->Start Button-->Run. Expand the list of USB controllers and observe enCoRe V DVK enumerated and listed as **“Cypress enCoRe V LV DVK ISOC Example (3.4.5.000)”**.
11. The *cyusb3660dvk.inf* and *cyusb.sys*, and *cyusb3660dvk.cat* are signed driver packages for all 6 Windows OS platforms-WinXP(32/64),Win Vista(32/64) and Win-7(32/64).Any modification to the *cyusb3660dvk.inf* file would result in Invalid driver signature. The supplied package should be used without modification to validate only the examples provided with the kit.
12. The cyusb3660dvk.inf(italic) contains ISOC examples VID/PID-0x04B4/0x07B4.To modify the .INF during development reboot PC and press F8 .Select **“Disable Driver signature enforcement”**.This will enable loading of unsigned driver packages in Windows PC. This modification will not propogate till next reboot.Windows Hardware certification program is designed to certify USB drivers for custom designed hardware based on Cypress Encore V IC. The VID/PID combination used in ISOC_Example firmware and driver package(*cyusb3660dvk.inf and cyusb.sys*) should be modified before submission to Microsoft. Refer to "Windows Hardware

Certification" for more details.

Note: If the driver matching sequence (selecting *cyusb3660dvk.inf* and *cyusb.sys* of anyone of examples-Bulk Example and ISOC Example is performed earlier then the remaining example's step 6-9 can be avoided as the *cyusb3660dvk.inf* file contains VID/PID entries of both these firmware examples.

Figure 5-3. Board Details

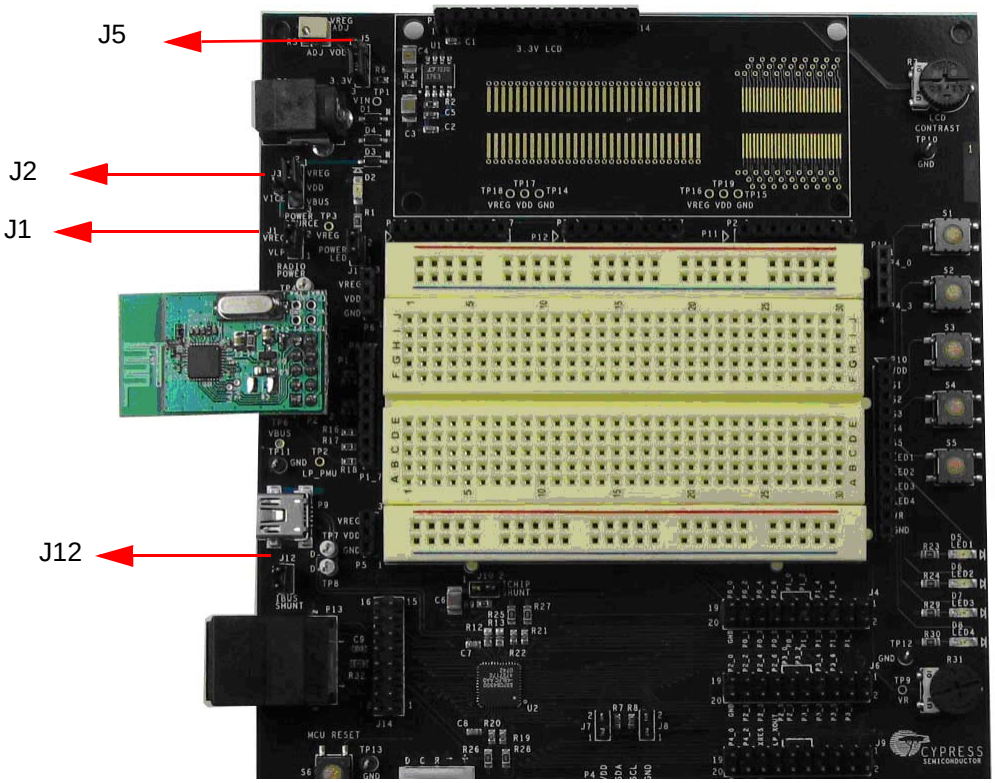

5.3.3 Project Flowchart

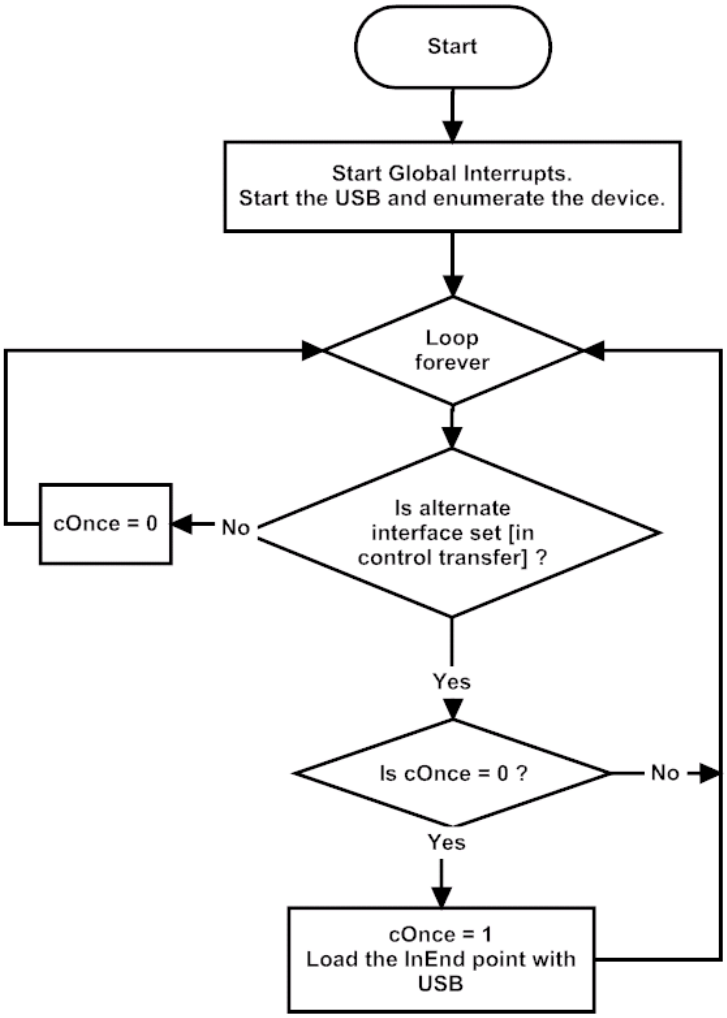

5.3.4 Verify Output

- Launch the Streamer application located at <installed directory>:\Cypress\CY3660 enCoRe V DVK\1.0\Examples\ISOC_Example\PC_Host_App\Streamer.exe.
- The ISOC_Example demonstrates the correct behavior of an USB isochronous device by enumerating with a default interface that consumes no bandwidth. Then, when data is ready to be streamed to or from the USB device, the host application selects the alternate interface with the ischronous endpoint descriptor. Using the Streamer application provided, isochronous data can be streamed from the CY3660 DVK board.

5.4 Code Example 4: Wireless USB

5.4.1 Project Description

The WUSB_Example demonstrates the functionality of a WirelessUSB HID keyboard. Two development boards with LP radio modules are used for this example. One board is used as a bridge, which enumerates on the PC as a bus-powered USB composite device supporting keyboard and mouse. The other board is used as a keyboard, which simulates a simple keyboard with three keys (Num Lock key, Caps Lock key, and Scroll Lock key) and three LEDs (Num Lock LED, Caps Lock LED, and Scroll Lock LED).

5.4.2 Hardware Connections

5.4.2.1 Wireless USB Bridge

Program the CY3660 enCoRe V DVK board with the hex file located at <installed directory>\Cypress\CY3660 enCoRe V DVK\<ver>\Firmware\WUSB_Example\enCoReV_dvk_bridge.

1. Select **Program > Program Part** in PSoC Designer.
2. Attach the WirelessUSB LP Radio module to P2.
3. Wire the S1 button as a bind button. On the CY3660 DVK board, attach a wire from P0_2 on P7 to S1on P10.
4. Wire LED1 and LED2. On the CY3660 DVK board, attach wires from P0_0 on P7 to LED1 on P10 and from P0_1 on P7 to LED2 on P10 separately.
5. Place a jumper on J1 and another jumper on J12.
6. Place a jumper between VDD and VREG on J2.
7. J5 is used to select the fixed 3.3 V VREG or Adjustable VREG from 3.66 V to 1.63 V. In the beginning, it is suggested to use fixed 3.3 V VREG.
8. Connect the mini-B side of the USB A/Mini-B cable to the CY3660 enCoRe V DVK board.
9. Connect the A side of the USB A/Mini-B cable to the PC.

Figure 5-4. Board Details

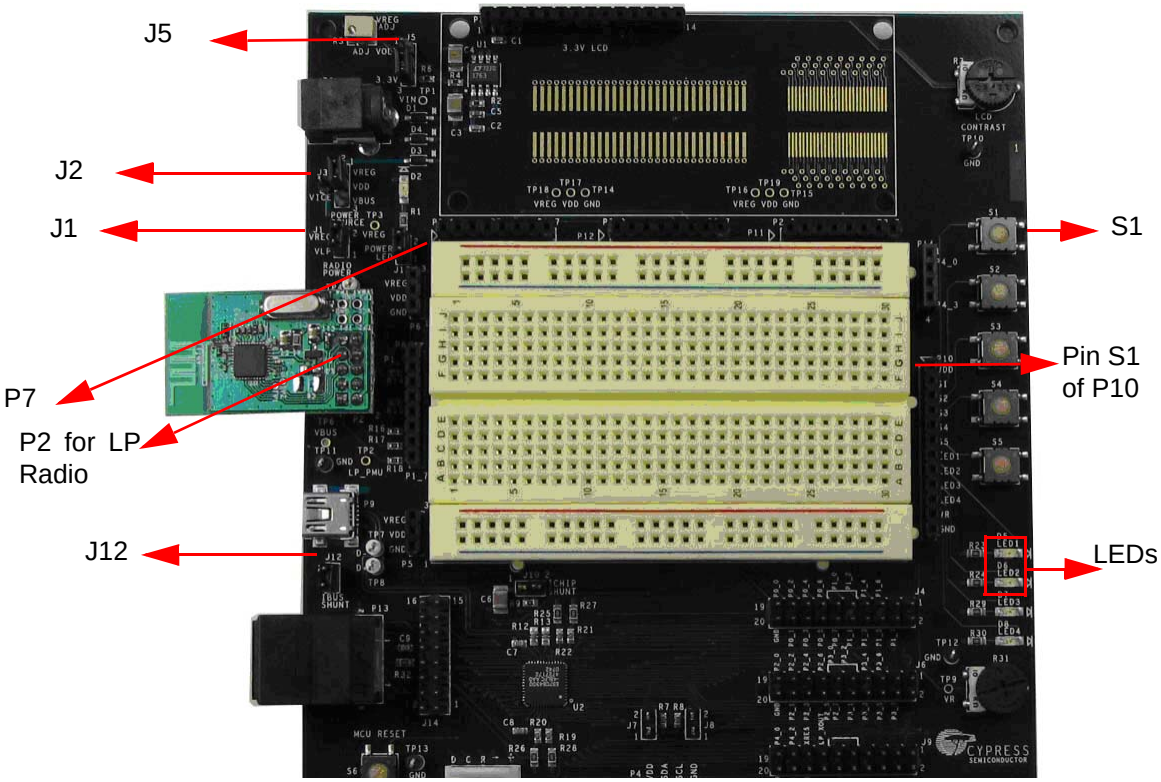

5.4.2.2 *Wireless USB Keyboard*

Program the CY3660 enCoRe V DVK board with the hex file located at <installed directory>\Cypress\CY3660 DVK\<ver>\Firmware\WUSB_Example\enCoReV_dvk_keyboard\.

1. Select the **Program > Program Part** in PSoC Designer.
2. Attach the WirelessUSB LP Radio module to P2.
3. Wire the S5 button as a bind button. On the CY3660 DVK board, attach a wire from P0_6 on P7 to S5 on P10.
4. Wire S1 button S1 as a Num Lock key, S2 button as a Caps Lock key, and S3 button as a Scroll Lock Key. On the CY3660 DVK board, attach wires from P0_3 on P7 to S1 on P10, from P0_4 on P7 to S2 on P10, and from P0_5 on P7 to S3 on P10 separately.
5. Wire LED1 as a Num Lock LED, LED2 as a Caps Lock LED, and LED3 as a Scroll Lock LED. On the CY3660 DVK board, attach wires from P0_0 on P7 to LED1 on P10, from P0_1 on P7 to LED2 on P10, and from P0_2 on P7 to LED3 on P10 separately
6. Place a jumper on J1.
7. Place a jumper between VDD and VREG on J2.
8. J5 is used to select the fixed 3.3 V VREG or Adjustable VREG from 3.66 V to 1.63 V. In the beginning, it is suggested to use fixed 3.3 V VREG.
9. Connect AC adapter to P1.

Figure 5-5. Board Details

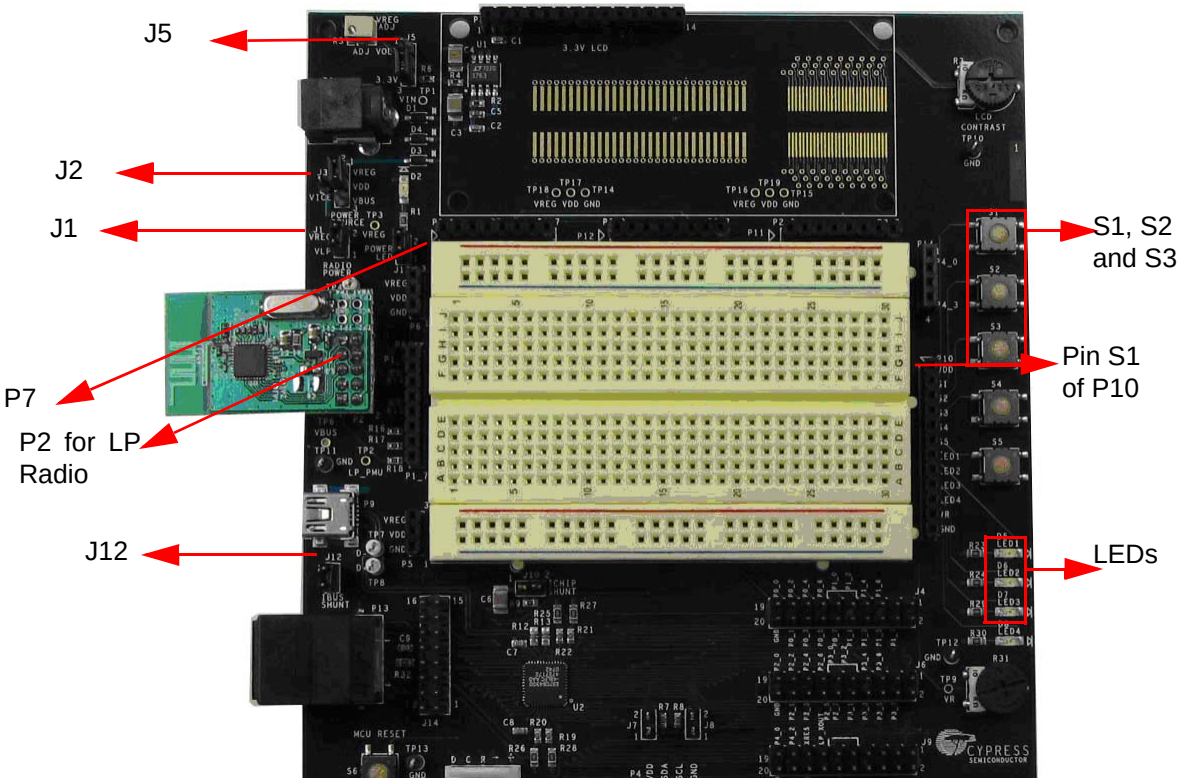

5.4.3 Project Flowchart

5.4.3.1 Wireless USB Bridge

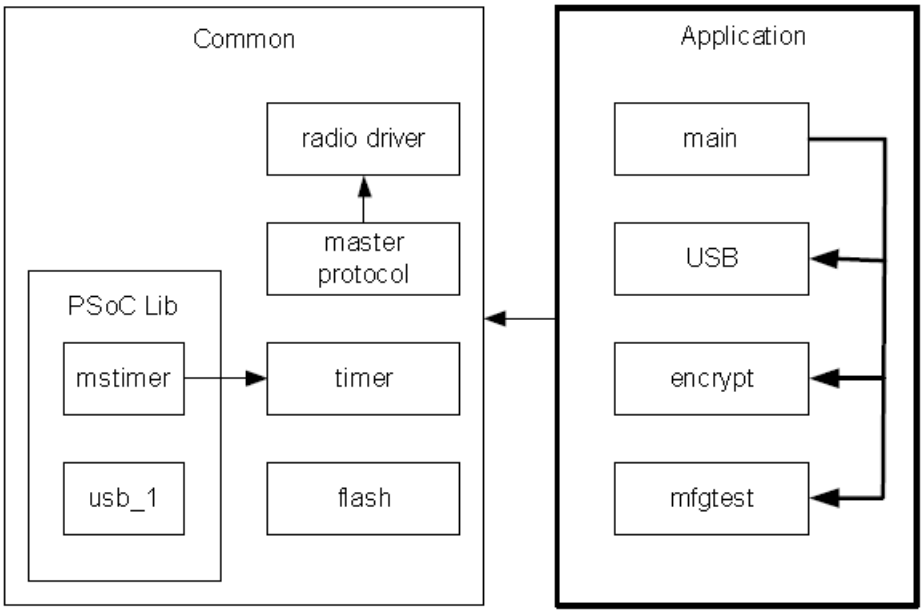

5.4.3.2 *Wireless USB Keyboard*

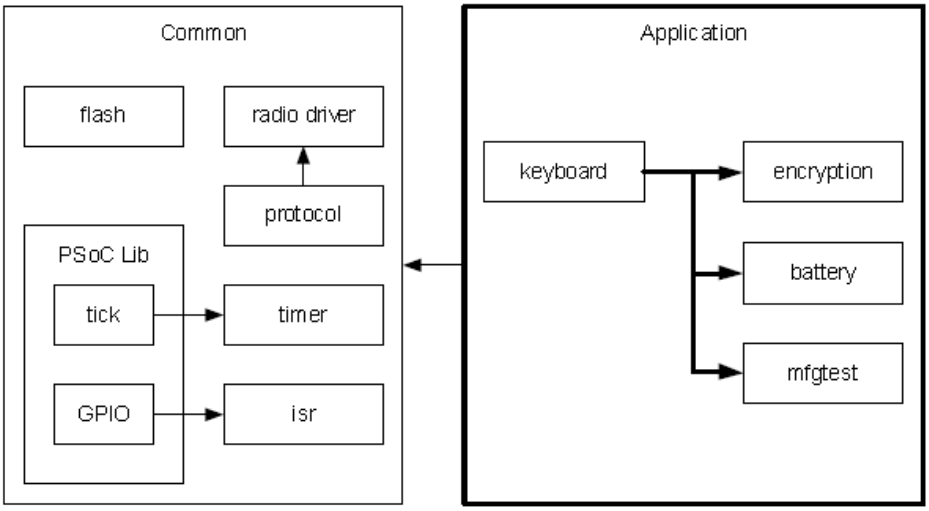

5.4.4 Verify Output

Results for Bind

After the bridge is enumerated and the LEDs are off, press the bind button S1 on the bridge and the bind button S5 on the keyboard to complete the 'binding' process. While in the bind mode, the LED2 on the bridge blinks until the bind button is pushed on the keyboard. The bridge LED2 stops blinking to indicate the keyboard is now ready for normal operation. Note that the bridge LED2 also stops blinking after 20 seconds timeout without receiving any bind request from the keyboard.

Results for Key Pressing

Press a button on the keyboard that represent Num Lock key (S1), Caps Lock key (S2), or Scroll Lock key (S3). The keystroke data is sent through the air to the bridge, which transfers this data to the PC. After receiving the data from the bridge, the PC processes the Num, Caps, and Scroll Lock data and returns the LED information to the bridge and then the keyboard. Finally, the keyboard OCD chip turns on/off the corresponding LEDs.

A. Appendix

A.1 Schematic

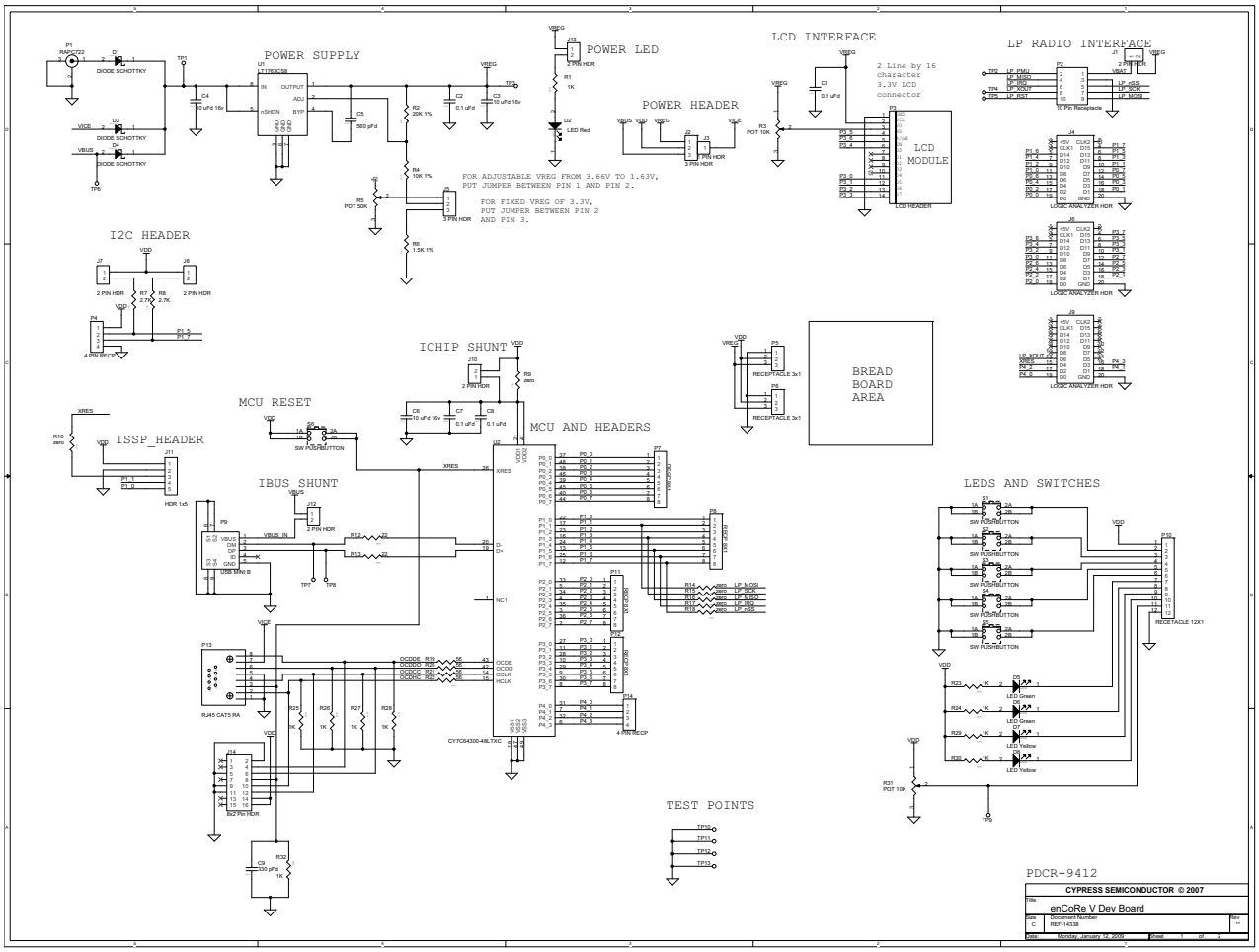

A.2 Schematic - LP Radio

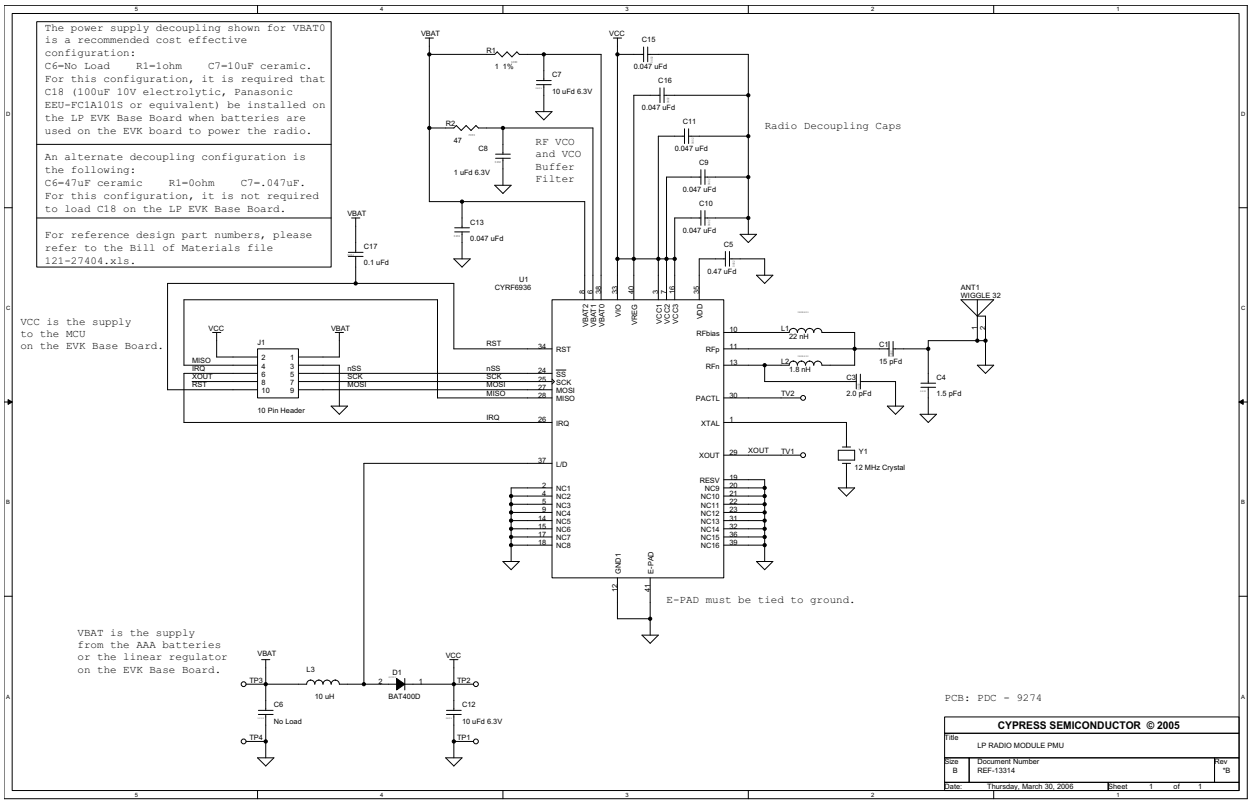

A.3 Board Layout

Gerber files are located at `<installed directory>\Cypress\CY3660 enCoRe V DVK\<ver>\Hardware`

A.3.1 Top View

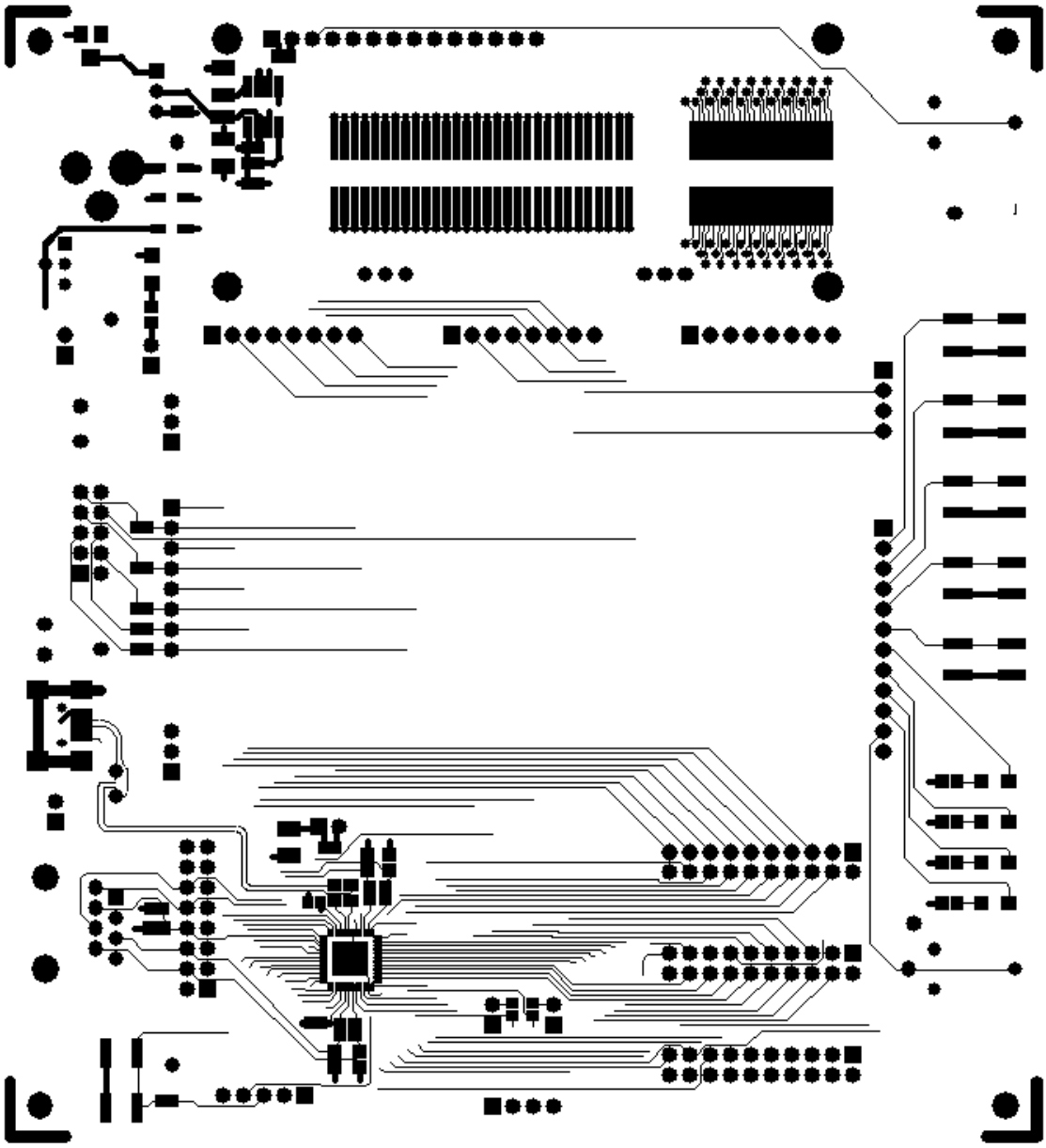

A.3.2 Bottom View

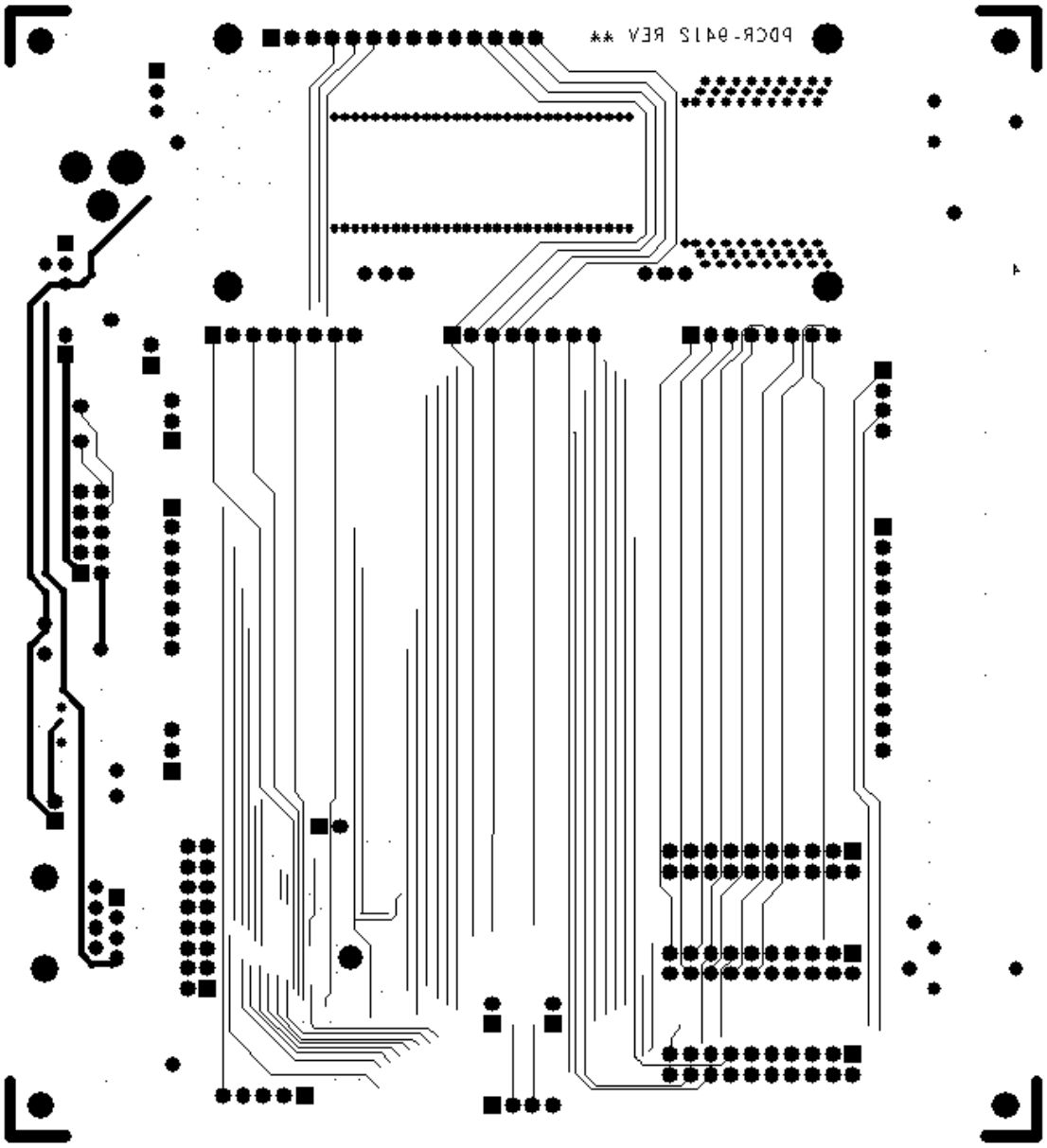

A.4 BOM

Table A-1. Bill of Materials

Item	Qty.	Reference	Description	Manufacturer	Mfr Part Number
1	4	C1,C2,C7,C8	CAP 10UF 16V CERAMIC X7R 0603	Kemet	C0603C104J4RACTU
2	3	C3,C4,C6	CAP 10UF 16V CERAMIC X5R 1210	Panasonic - ECG	ECJ-4YB1C106K
3	1	C5	CAP 560PF 50V CERAMIC NPO 0603	Panasonic - ECG	ECJ-1VC1H561J
4	1	C9	CAP 330PF 50V CERAMIC NPO 0603	Kemet	C0603C331J5GACTU
5	3	D1,D3,D4	DIODE SCHOTTKY 0.5A 20V SOD-123	Fairchild Semiconductor	MBR0520L
6	1	D2	LED HI EFF RED CLEAR 1206 SMD	Chicago Miniature Lamp, Inc	CMD15-21VRC/TR8
7	2	D5,D6	LED GREEN CLEAR 1206 SMD	Chicago Miniature Lamp, Inc	CMD15-21VGC/TR8
8	2	D7,D8	LED YELLOW CLEAR 1206 SMD	CML Innovative Technolo-gies Inc	CMD15-21VYC/TR8
9	6	J1,J7,J8,J10,J12,J13	CONN HEADER VERT 2POS .100 30AU	AMP Division of TYCO	1-87215-0
10	2	J5,J2	CONN HEADR BRKWAY .100 03POS STR	Tyco Electronics/Amp	9-146280-0-03
11	1	J3	CONN HEADR BRKWAY .100 01POS STR	Tyco Electronics/Amp	9-146280-0-01
12	3	J4,J6,J9	CONN HDR BRKWAY .100 20POS VERT	Tyco Electronics/Amp	9-146256-0-10
13	1	J11	CONN HEADER 5POS 0.1 VERT KEYED	Molex	22-23-2051
14	1	J14	CONN HEADER 16POS .100" STR TIN	Molex/Waldom Electronics Corp	90131-0128
15	1	P1	CONN 2.1MM PWRJACK RT ANGLE PCB	Switchcraft Inc.	RAPC722
16	1	P2	CONN RCPT .100 DUAL STR 10POS	3M	929852-01-05-RA
17	1	P3	CONN REC .100 14POS for LCM-S01602DTR/A-3	3M	929850-01-14-RA
18	2	P14,P4	CONN RECP 4POS STR AU PCB	Samtec	SSQ-104-21-G-S
19	2	P5,P6	RECEPTACLE .100 SNGL STR 3POS	3M Electronics	929850-01-03-RA
20	4	P7,P8,P11,P12	CONN RECT 8POS .100" VERT	3M	929850-01-08-RA
21	1	P9	CONN USB MINI B SMT RIGHT ANGLE	TYCO	1734035-2
22	1	P10	RECEPTACLE .100 SNGL STR 12POS	3M	929850-01-12-RA
23	1	P13	CONN MOD JACK 8-8 RT/A PCB 50AU	AMP	5558343-1
24	10	R1,R23,R24,R25,R26,R27, R28,R29,R30,R32	RES 1.0K OHM 1/8W 5% 0805 SMD	Rohm	MCR10EZHJ102
25	1	R2	RES CHIP 20.0K OHM 1/16W 1% 0603 SMD	Yageo Corporation	RC0603FR-0720KL
26	2	R3,R31	10K OHM THUMBWH CERM ST POT	Bourns Inc.	3352E-1-103-LF
27	1	R4	RES CHIP 10.0K OHM 1/16W 1% 0603 SMD	Yageo Corporation	RC0603FR-0710KL
28	1	R5	50K OHM POTENTIOMETER TOP ADJ	Bourns Inc.	3214W-1-503E
29	1	R6	RES CHIP 1.50K OHM 1/16W 1% 0603 SMD	Yageo Corporation	RC0603FR-071K5L
30	2	R7,R8	RES 2.7K OHM 1/16W 5% 0603 SMD	Panasonic - ECG	ERJ-3GEYJ272V
31	7	R9,R10,R14,R15,R16,R17, R18	RES ZERO OHM 1/16W 5% 0603 SMD	Panasonic - ECG	ERJ-3GEY0R00V
32	2	R13,R12	RES 22 OHM 1/10W 5% 0805 SMD	Panasonic - ECG	ERJ-6GEYJ220V
33	4	R19,R20,R21,R22	RES 56 OHM 1/10W 5% 0603 SMD	Panasonic - ECG	ERJ-3GEYJ560V
34	6	S1,S2,S3,S4,S5,S6	LT SWITCH 6MM 160GF H=2.5MM SMD	Panasonic - ECG	EVQ-QWS02W
35	3	TP4,TP7,TP8	TEST POINT 43 HOLE 65 PLATED WHITE	Keystone Electronics	5002

Item	Qty.	Reference	Description	Manufacturer	Mfr Part Number
36	4	TP10,TP11,TP12,TP13	TEST POINT 43 HOLE 65 PLATED BLACK	Keystone Electronics	5001
37	1	U1	IC ADJ REGULATOR LDO 500MA SO8	Linear Technology	LT1763CS8#PBF
38	1	U2	IC Encore V QFN 48	Cypress Semiconductor	CY7C64300
39	4	"SEE ASSEMBLY DRAW-ING"	foot pad, .50W X.23H, square WHITE	3M	SJ5518
40	1	"SEE ASSEMBLY NOTES"	SOLDERLESS BREADBOARD 3.25 x 2.125 400 POINTS	Jameco Valuepro	WBU-301-R
41	1	PCB	Printed Circuit Board	Cypress Semiconductor	PDCR-9412 Rev2
42	1	LABEL1	Serial Number		
43	1	LABEL2	PCA LABEL		121R-41200 Rev2
DO NOT INSTALL					
44	116	TV1-TV116	TEST VIA 36 HOLE 20 PLATED	NA	NA
45	1	U4	PROTO AREA 56-pin 25mil pitch	NA	NA
46	1	U5	PROTO AREA 60-pin 50mil pitch	NA	NA
47	12	TP1,TP2,TP3,TP5,TP6,TP9, TP14,TP15,TP16,TP17,TP18, TP19	TEST POINT 43 HOLE 65 PLATED	NA	NA

A.5 BOM - LP Radio

Table A-2. BOM - LP Radio

Item	Qty	Reference	Description	Manufacturer	Mfr Part Number
1	1	ANT1	2.5GHZ H-STUB WIGGLE ANTENNA FOR 32MIL PCB	NA	NA
2	1	C1	CAP 15PF 50V CERAMIC NPO 0402	Panasonic	ECJ-0EC1H150J
3	1	C3	CAP 2.0 PF 50V CERAMIC NPO 0402	Kemet	C0402C209C5GACTU
4	1	C4	CAP 1.5PF 50V CERAMIC NPO 0402 SMD	PANASONIC	ECJ-0EC1H1R5C
5	1	C5	CAP 0.47 uF 50V CERAMIC X5R 0402	Murata	GRM155R60J474KE19D
6	2	C12,C7	CAP CERAMIC 10UF 6.3V X5R 0805	Kemet	C0805C106K9PACTU
7	1	C8	CAP 1 uF 6.3V CERAMIC X5R 0402	Panasonic	ECJ-0EB0J105M
8	6	C9,C10,C11,C13,C15,C16	CAP 0.047 uF 50V CERAMIC X5R 0402	AVX	0402YD473KAT2A
9	1	C17	CAP 0.1 uF 50V CERAMIC X5R 0402	Kemet	C0402C104K8PACTU
10	1	D1	DIODE SCHOTTKY 0.5A 40V SOT23	DIODES INC	BAT400D-7-F
11	1	J1	CONN HDR VERT 10POS .100 GOLD	Molex/GC/Waldom Inc.	10-89-1101
12	1	L1	INDUCTOR 22NH 2% FIXED 0603 SMD	Panasonic - ECG	ELJ-RE22NGF2
13	1	L2	INDUCTOR 1.8NH +-.3NH FIXED 0402 SMD	Panasonic - ECG	ELJ-RF1N8DF
14	1	L3	COIL 10UH 1100MA CHOKE 0805	Newark	30K5421
15	1	R1	RES 1.00 OHM 1/8W 1% 0805 SMD	Yageo	9C08052A1R00FKHFT
16	1	R2	RES 47 OHM 1/16W 5% 0402 SMD	Panasonic - ECG	ERJ-2GEJ470X
17	1	U1	IC, LP 2.4 GHz RADIO SoC QFN-40	Cypress Semiconductor	CYRF6936 Rev A5
18	1	Y1	CRYSTAL 12.00MHZ HC49 SMD	eCERRA	GF-1200008
19	1	PCB	PRINTED CIRCUIT BOARD	Cypress Semiconductor	PDC-9274 *A
20	1	LABEL1	Serial Number	XXXXXX	
21	1	LABEL2	PCA #	121-27404 **	