LED Driver

BCR 402U E6327

Datasheet

Revision 2.3, 2022-12-08

Power & Sensor Systems

Edition 2022-12-08

Published by
Infineon Technologies AG
81726 Munich, Germany

© 2022 Infineon Technologies AG
All Rights Reserved.

Legal Disclaimer

The information given in this document shall in no event be regarded as a guarantee of conditions or characteristics. With respect to any examples or hints given herein, any typical values stated herein and/or any information regarding the application of the device, Infineon Technologies hereby disclaims any and all warranties and liabilities of any kind, including without limitation, warranties of non-infringement of intellectual property rights of any third party.

Information

For further information on technology, delivery terms and conditions and prices, please contact the nearest Infineon Technologies Office (**www.infineon.com**).

Warnings

Due to technical requirements, components may contain dangerous substances. For information on the types in question, please contact the nearest Infineon Technologies Office.

Infineon Technologies components may be used in life-support devices or systems only with the express written approval of Infineon Technologies, if a failure of such components can reasonably be expected to cause the failure of that life-support device or system or to affect the safety or effectiveness of that device or system. Life support devices or systems are intended to be implanted in the human body or to support and/or maintain and sustain and/or protect human life. If they fail, it is reasonable to assume that the health of the user or other persons may be endangered.

Revision History	
Page or Item	**Subjects (major changes since previous revision)**
Revision 2.3, 2022-12-08	
Page 17	Updated Figure 5-3

Trademarks of Infineon Technologies AG

AURIX™, C166™, CanPAK™, CIPOS™, CIPURSE™, EconoPACK™, CoolMOS™, CoolSET™, CORECONTROL™, CROSSAVE™, DAVE™, DI-POL™, EasyPIM™, EconoBRIDGE™, EconoDUAL™, EconoPIM™, EconoPACK™, EiceDRIVER™, eupec™, FCOS™, HITFET™, HybridPACK™, I²RF™, ISOFACE™, IsoPACK™, MIPAQ™, ModSTACK™, my-d™, NovalithIC™, OptiMOS™, ORIGA™, POWERCODE™; PRIMARION™, PrimePACK™, PrimeSTACK™, PRO-SIL™, PROFET™, RASIC™, ReverSave™, SatRIC™, SIEGET™, SINDRION™, SIPMOS™, SmartLEWIS™, SOLID FLASH™, TEMPFET™, thinQ!™, TRENCHSTOP™, TriCore™.

Other Trademarks

Advance Design System™ (ADS) of Agilent Technologies, AMBA™, ARM™, MULTI-ICE™, KEIL™, PRIMECELL™, REALVIEW™, THUMB™, µVision™ of ARM Limited, UK. AUTOSAR™ is licensed by AUTOSAR development partnership. Bluetooth™ of Bluetooth SIG Inc. CAT-iq™ of DECT Forum. COLOSSUS™, FirstGPS™ of Trimble Navigation Ltd. EMV™ of EMVCo, LLC (Visa Holdings Inc.). EPCOS™ of Epcos AG. FLEXGO™ of Microsoft Corporation. FlexRay™ is licensed by FlexRay Consortium. HYPERTERMINAL™ of Hilgraeve Incorporated. IEC™ of Commission Electrotechnique Internationale. IrDA™ of Infrared Data Association Corporation. ISO™ of INTERNATIONAL ORGANIZATION FOR STANDARDIZATION. MATLAB™ of MathWorks, Inc. MAXIM™ of Maxim Integrated Products, Inc. MICROTEC™, NUCLEUS™ of Mentor Graphics Corporation. MIPI™ of MIPI Alliance, Inc. MIPS™ of MIPS Technologies, Inc., USA. muRata™ of MURATA MANUFACTURING CO., MICROWAVE OFFICE™ (MWO) of Applied Wave Research Inc., OmniVision™ of OmniVision Technologies, Inc. Openwave™ Openwave Systems Inc. RED HAT™ Red Hat, Inc. RFMD™ RF Micro Devices, Inc. SIRIUS™ of Sirius Satellite Radio Inc. SOLARIS™ of Sun Microsystems, Inc. SPANSION™ of Spansion LLC Ltd. Symbian™ of Symbian Software Limited. TAIYO YUDEN™ of Taiyo Yuden Co. TEAKLITE™ of CEVA, Inc. TEKTRONIX™ of Tektronix Inc. TOKO™ of TOKO KABUSHIKI KAISHA TA. UNIX™ of X/Open Company Limited. VERILOG™, PALLADIUM™ of Cadence Design Systems, Inc. VLYNQ™ of Texas Instruments Incorporated. VXWORKS™, WIND RIVER™ of WIND RIVER SYSTEMS, INC. ZETEX™ of Diodes Zetex Limited.

Last Trademarks Update 2011-11-11

Table of Contents

Table of Contents 4
List of Figures 5
List of Tables 6
1 LED Driver 7
1.1 Features 7
1.2 Applications 7
1.3 General Description 7
2 Electrical Characteristics 9
3 Typical characteristics 10
4 Application hints 16
5 Package 17
Terminology 18

List of Figures

Figure 1-1 Pin configuration and typical application . . . 8
Figure 3-1 Total Power Dissipation $P_{tot} = f(T_S)$ . . . 10
Figure 3-2 Permissible Pulse Load $R_{thJS} = f(t_p)$ . . . 10
Figure 3-3 Permissible Pulse Load $P_{totmax} / P_{totDC} = f(t_p)$ . . . 11
Figure 3-4 Output Current versus V_S $I_{out} = f(V_S)$, $V_S - V_{out} = 1.4$ V, R_{ext} = Parameter . . . 12
Figure 3-5 Supply Current versus V_S $I_S = f(V_S)$, T_A = Parameter . . . 12
Figure 3-6 Output Current versus V_S $I_{out} = f(V_S)$, $V_S - V_{out}$ = Parameter . . . 13
Figure 3-7 Output Current versus V_S $I_{out} = f(V_S)$, $V_S - V_{out} = 1.4$ V, T_A = Parameter . . . 13
Figure 3-8 Output Current versus R_{ext} $I_{out} = f(R_{ext})$, $V_S = 10$ V, $V_S - V_{out} = 1.4$ V, T_A = Parameter . . . 14
Figure 3-9 Output Current versus T_S $I_{out} = f(T_S)$, $V_S = 10$ V, $V_S - V_{out} = 1.4$ V, R_{ext} = Parameter . . . 14
Figure 3-10 Reference Voltage V_{drop} vs I_{out} $V_{drop} = f(I_{out})$, I_{out} = 10 µA to 10 mA . . . 15
Figure 3-11 Reference Voltage V_{drop} vs I_{out} $V_{drop} = f(I_{out})$, I_{out} = 10 mA to 65 mA . . . 15
Figure 4-1 Application Circuit: Stand alone current source . . . 16
Figure 4-2 Application Circuit: Boost mode current source with external power transistor . . . 16
Figure 5-1 Package Outline for SC74 (dimensions in mm) . . . 17
Figure 5-2 Package Footprint for SC74 (dimensions in mm) . . . 17
Figure 5-3 Tape and Reel Information for SC74 (dimensions in mm) . . . 17

List of Tables

Table 2-1 Maximum Ratings at T_A = 25 °C, unless otherwise specified 9
Table 2-2 Thermal Resistance at T_A = 25 °C, unless otherwise specified. 9
Table 2-3 Electrical Characteristics at T_A = 25 °C, unless otherwise specified 9
Table 2-4 DC Characteristics with stabilized LED load at T_A = 25 °C, unless otherwise specified 9

1 LED Driver

1.1 Features

- LED drive current preset to 20 mA
- Output current adjustable up to 65 mA with an external resistor
- Easy paralleling of drivers to increase current
- Supply voltage up to 40 V
- High current accuracy at supply voltage variation
- Low voltage overhead of 1.4 V
- Up to 750 mW power dissipation in a small SC74 package
- Negative thermal coefficient of -0.2 %/K reduces output current at higher temperatures
- RoHS compliant (Pb-free) package
- Automotive qualified according AEC Q101

SC74-3D

1.2 Applications

- Channel letters for advertising, LED strips for decorative lighting
- Aircraft, train, ship illumination
- Retrofits for general lighting, white goods like refrigerator lighting
- Medical lighting
- Automotive applications like CHMSL and rear combination lights

1.3 General Description

The BCR 402U E6327 is a cost efficient LED driver to drive low power LEDs. The advantages towards resistor biasing are:

- homogenous light output despite varying forward voltages in different LED strings
- homogenous light output of LEDs despite voltage drop across long supply lines
- homogenous light output independent from supply voltage variations
- longer lifetime of the LEDs due to reduced output current at higher temperatures (negative thermal coefficient)

The advantages towards discrete solutions are:

- lower assembly cost
- smaller form factor
- higher reliability due to less soldering joints
- higher output current accuracy due to pretested LED drivers

Dimming is possible by using an external digital transistor at the ground pin.

The BCR 402U E6327 can be operated at higher supply voltages by putting LEDs between the supply voltage V_S and the power supply pin of the LED driver. You can find further details in our application notes.

The BCR 402U E6327 is a perfect fit for numerous low power LED applications by combining small form factor with low cost. These LED drivers offer several advantages to resistors like significantly higher current control at very low voltage drop ensuring high lifetime of LEDs.

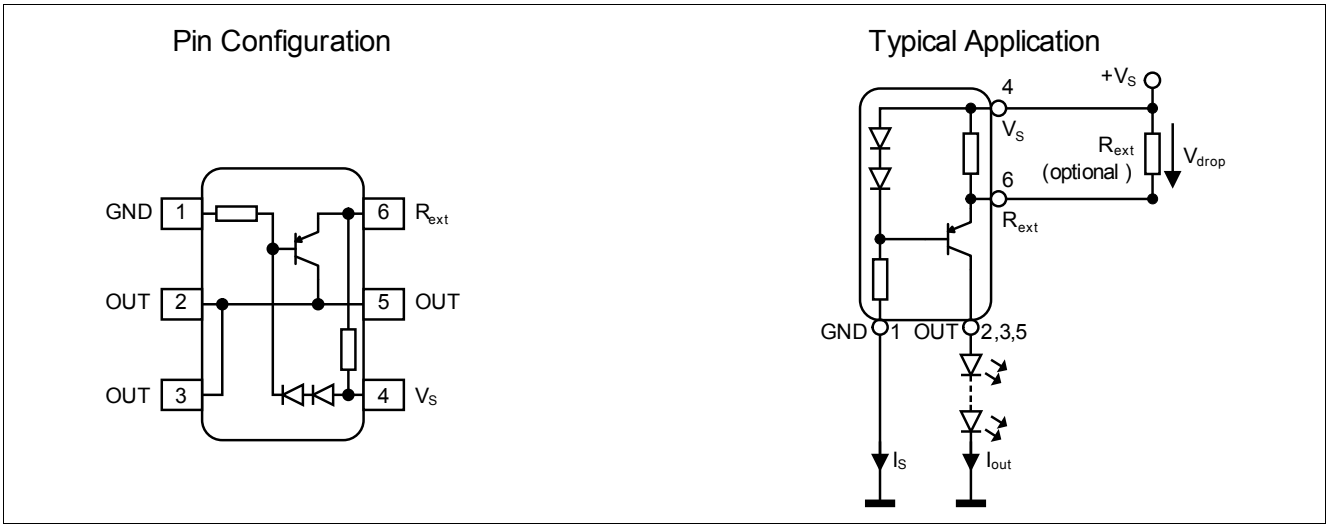

Figure 1-1 Pin configuration and typical application

Sales Name	Marking	Pin Configuration				Package
BCR 402U E6327	L2s	1 = GND	2; 3; 5 = OUT	4 = V_S	6 = R_{ext}	SC74

2 Electrical Characteristics

Table 2-1 Maximum Ratings at T_A = 25 °C, unless otherwise specified

Parameter	Symbol	Values			Unit	Note / Test Condition
		Min.	Typ.	Max.		
Supply voltage	V_S	-	-	40	V	
Output current	I_{out}	-	-	65	mA	
Output voltage	V_{out}	-	-	40	V	
Reverse voltage between all terminals	V_R	-	-	0.5	V	
Total power dissipation	P_{tot}	-	-	750	mW	T_S ≤ 112.5 °C
Junction temperature	T_J	-	-	150	°C	
Storage temperature range	T_{STG}	-65	-	150	°C	

Attention: Stresses above the max. values listed here may cause permanent damage to the device. Exposure to absolute maximum rating conditions for extended periods may affect device reliability. Maximum ratings are absolute ratings; exceeding only one of these values may cause irreversible damage to the integrated circuit.

Table 2-2 Thermal Resistance at T_A = 25 °C, unless otherwise specified

Parameter	Symbol	Values			Unit	Note / Test Condition
		Min.	Typ.	Max.		
Junction - soldering point[1)]	R_{thJS}	-	-	50	K/W	

1) For calculation of R_{thJA} please refer to Application Note AN077 (Thermal Resistance Calculation)

Table 2-3 Electrical Characteristics at T_A = 25 °C, unless otherwise specified

Parameter	Symbol	Values			Unit	Note / Test Condition
		Min.	Typ.	Max.		
Collector-emitter breakdown voltage	$V_{BR(CEO)}$	40	-	-	V	I_C = 1 mA, I_B = 0
Supply current	I_S	340	420	500	µA	V_S = 10 V
DC current gain	h_{FE}	100	220	470	-	I_C = 50 mA, V_{CE} = 1 V
Internal resistor	R_{int}	38	44	52	Ω	I_{Rint} = 10 mA
Output current	I_{out}	18	20	22	mA	V_S = 10 V V_{out} = 8.6 V
Voltage drop (V_{Rext})	V_{drop}	0.8	0.85	0.9	V	I_{out} = 20 mA

Table 2-4 DC Characteristics with stabilized LED load at T_A = 25 °C, unless otherwise specified

Parameter	Symbol	Values			Unit	Note / Test Condition
		Min.	Typ.	Max.		
Lowest sufficient supply voltage overhead	V_{Smin}	-	1.4	-	V	I_{out} > 18 mA
Output current change versus T_A	$\Delta I_{out}/I_{out}$	-	-0.2	-	%/K	V_S = 10 V
Output current change versus V_S	$\Delta I_{out}/I_{out}$	-	1	-	%/V	V_S = 10 V

3 Typical characteristics

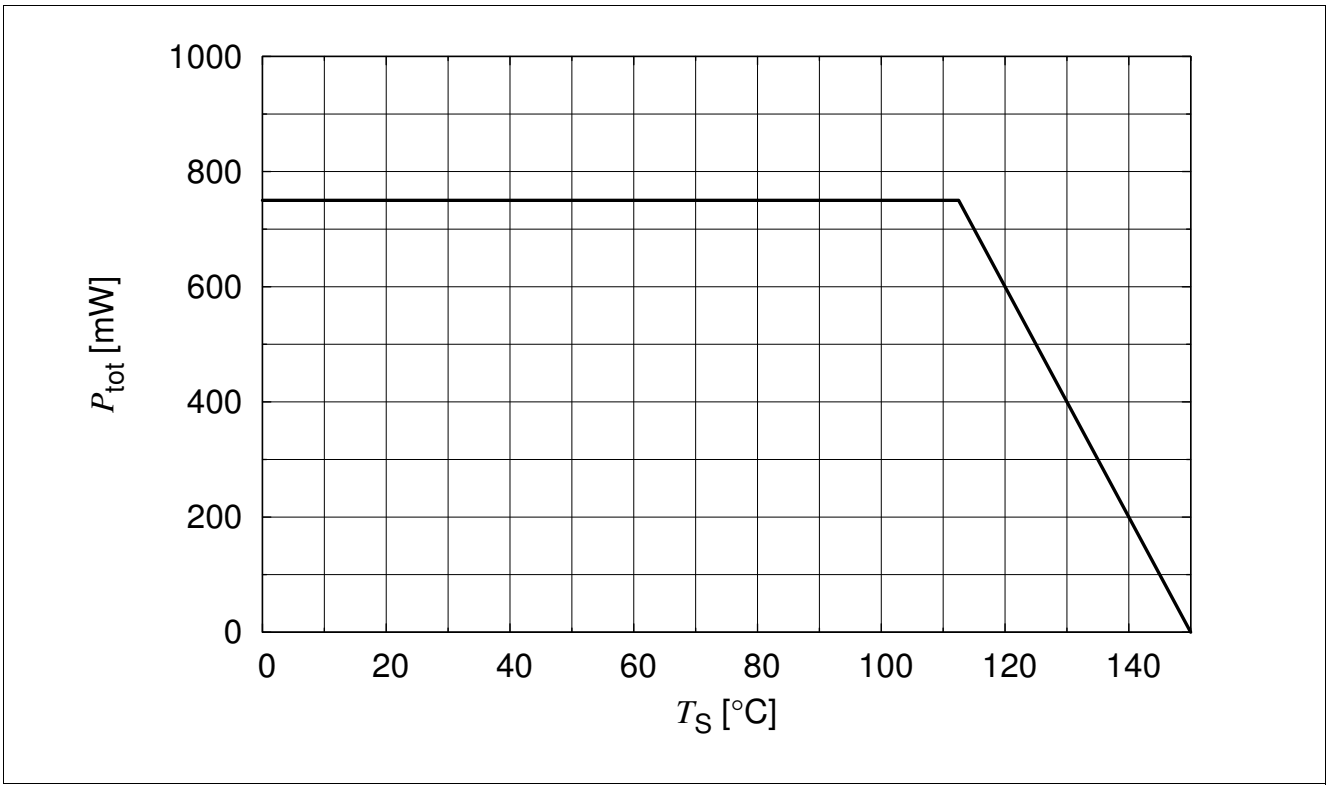

Figure 3-1 Total Power Dissipation $P_{tot} = f(T_S)$

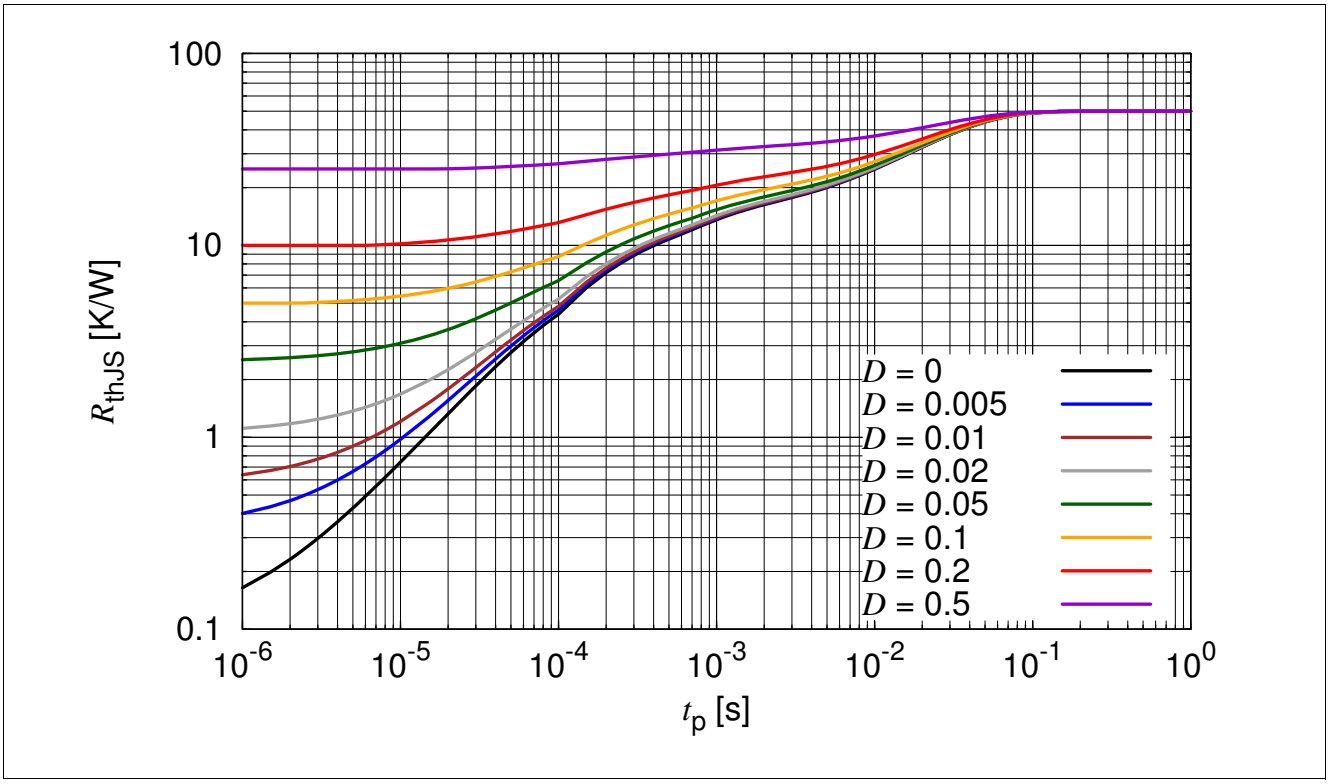

Figure 3-2 Permissible Pulse Load $R_{thJS} = f(t_p)$

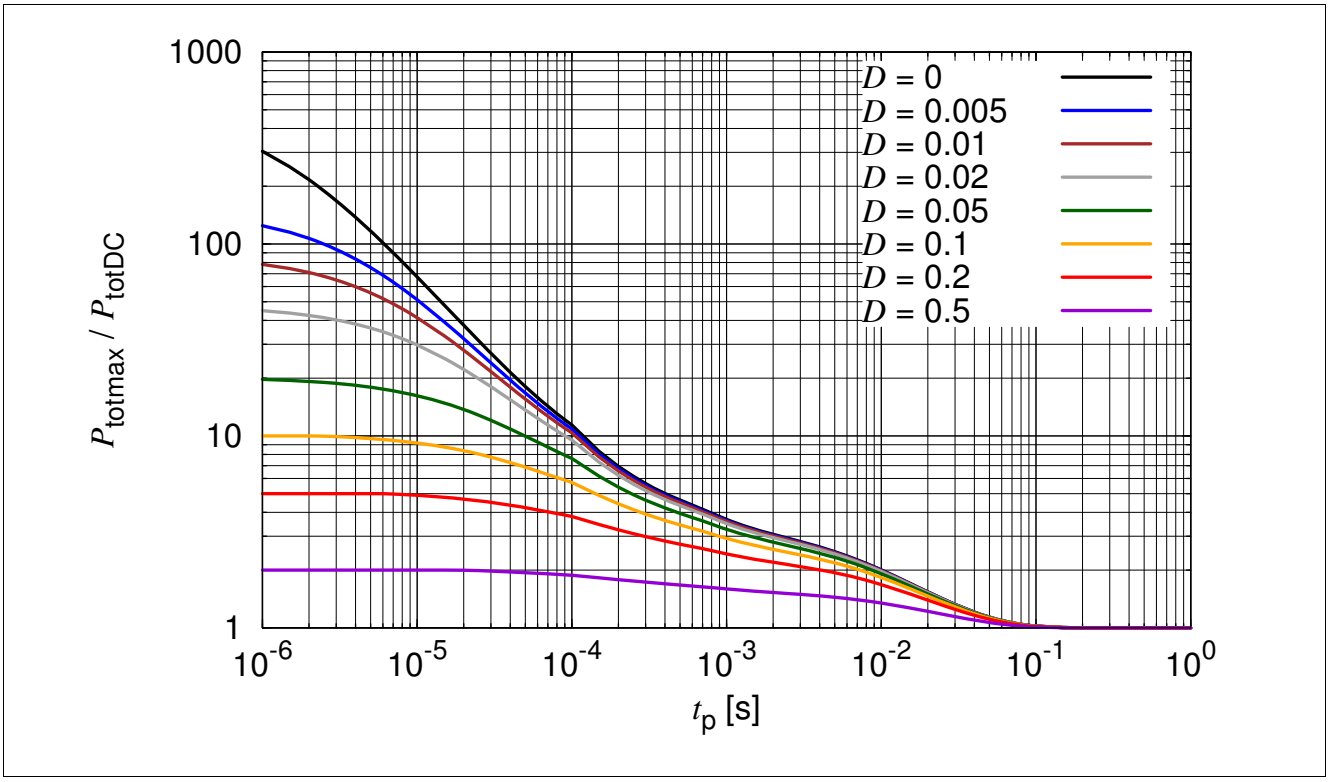

Figure 3-3 Permissible Pulse Load P_{totmax} / P_{totDC}= $f(t_p)$

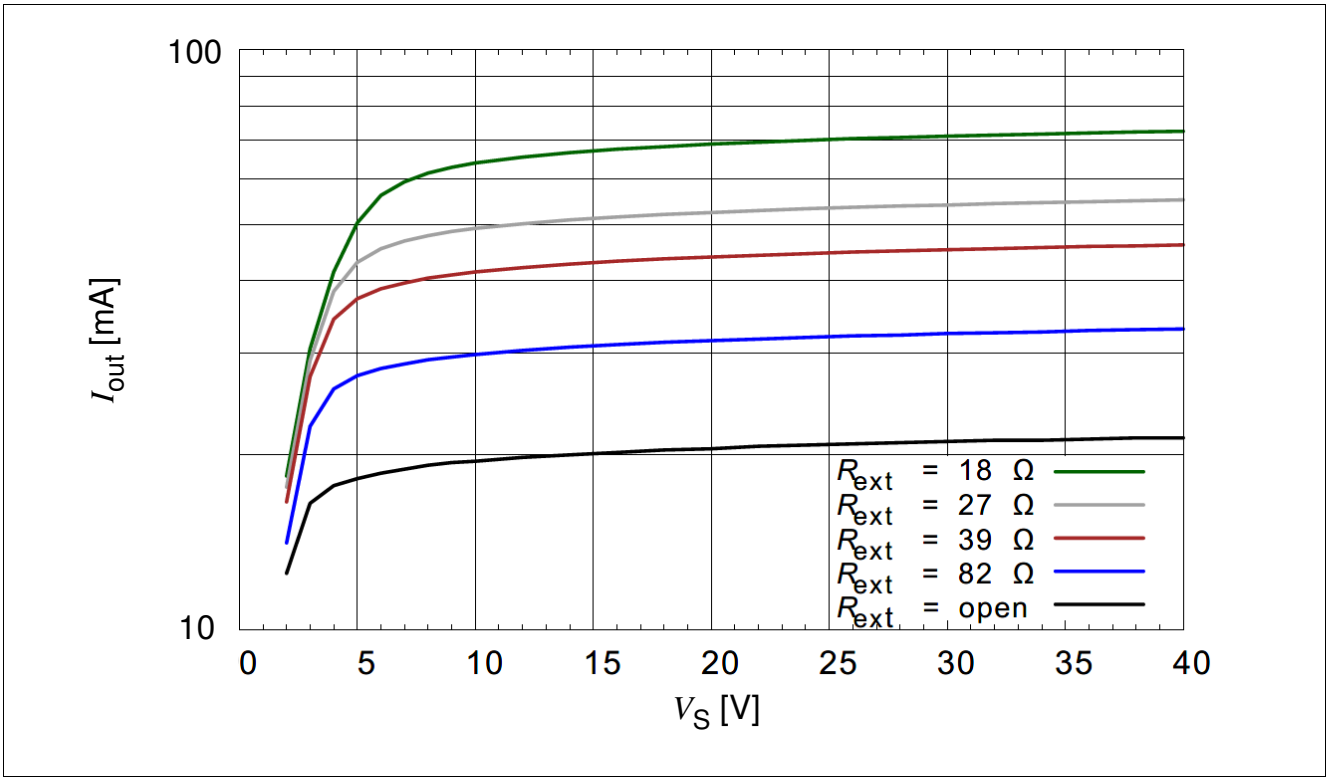

Figure 3-4 Output Current versus V_S $I_{out} = f(V_S)$, V_S - V_{out} = 1.4 V, R_{ext} = Parameter

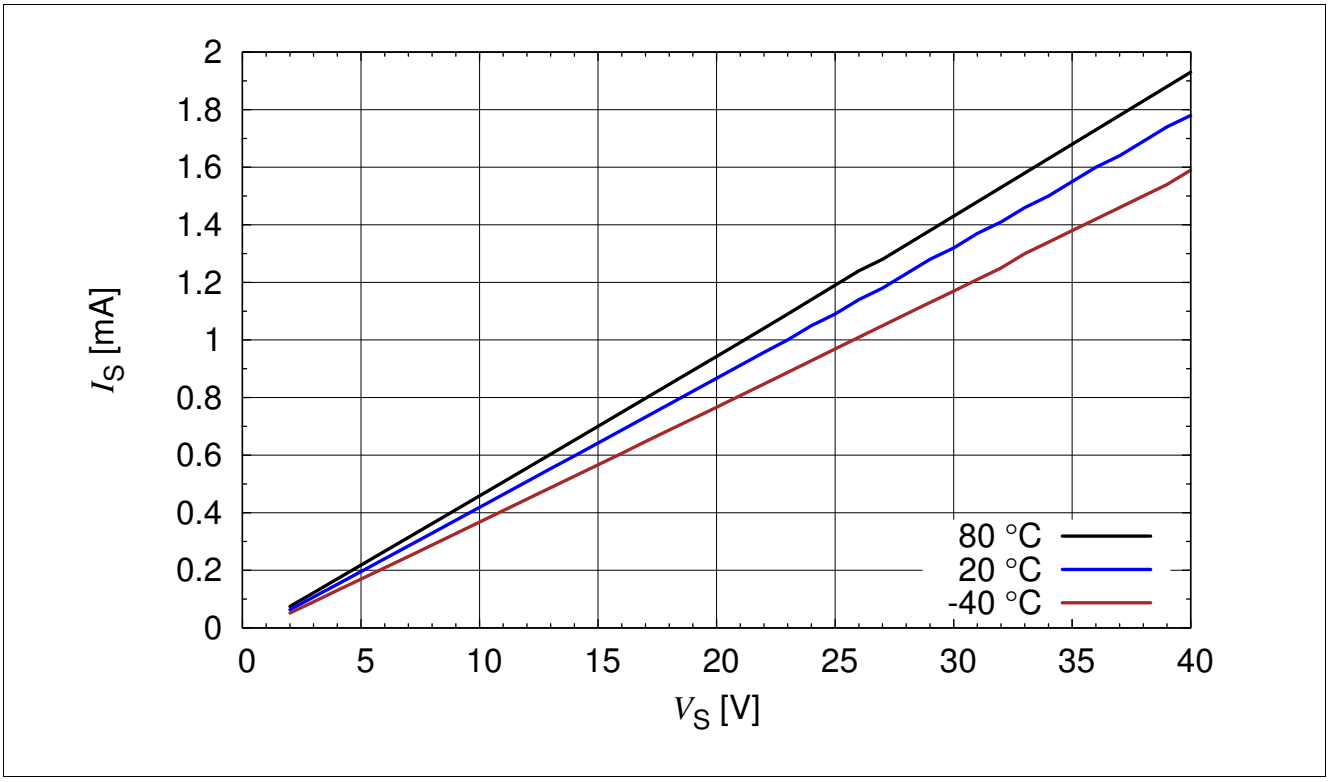

Figure 3-5 Supply Current versus V_S $I_S = f(V_S)$, T_A = Parameter

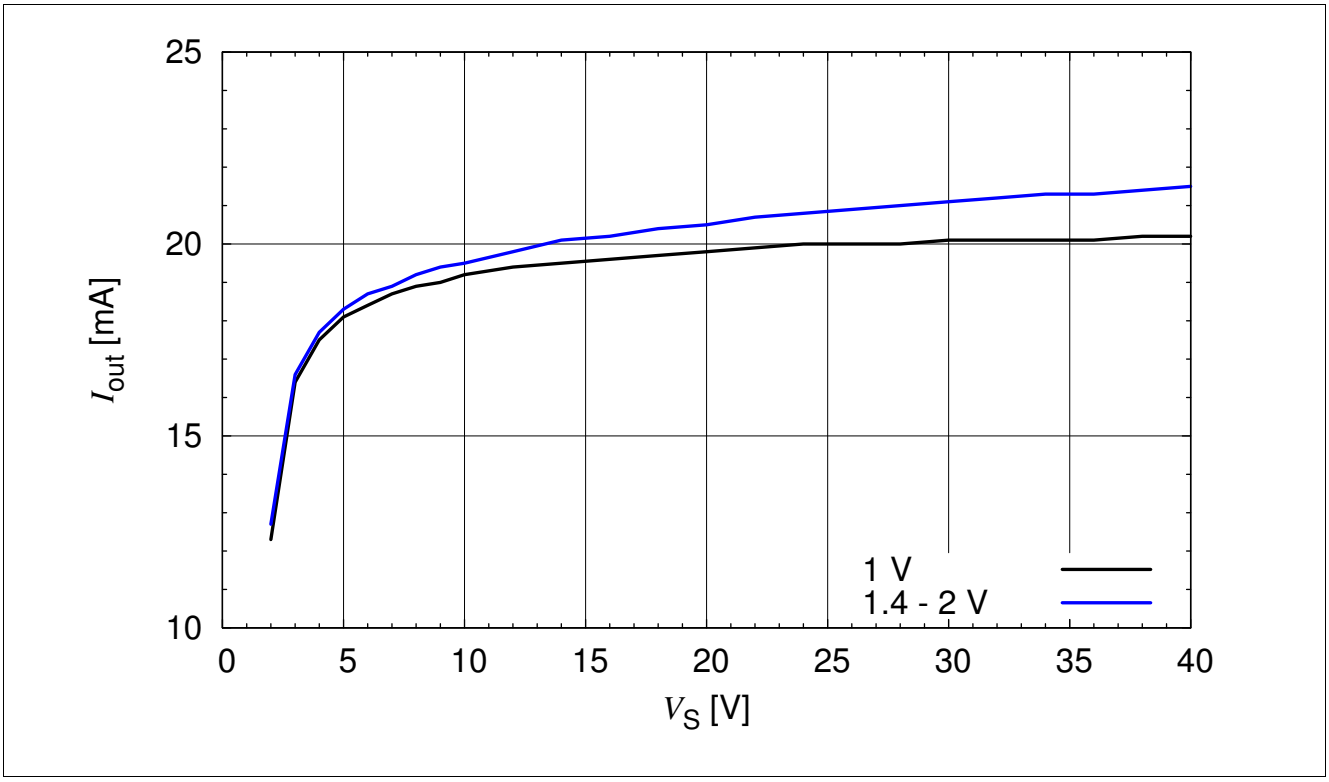

Figure 3-6 Output Current versus V_S $I_{out} = f(V_S)$, $V_S - V_{out}$ = Parameter

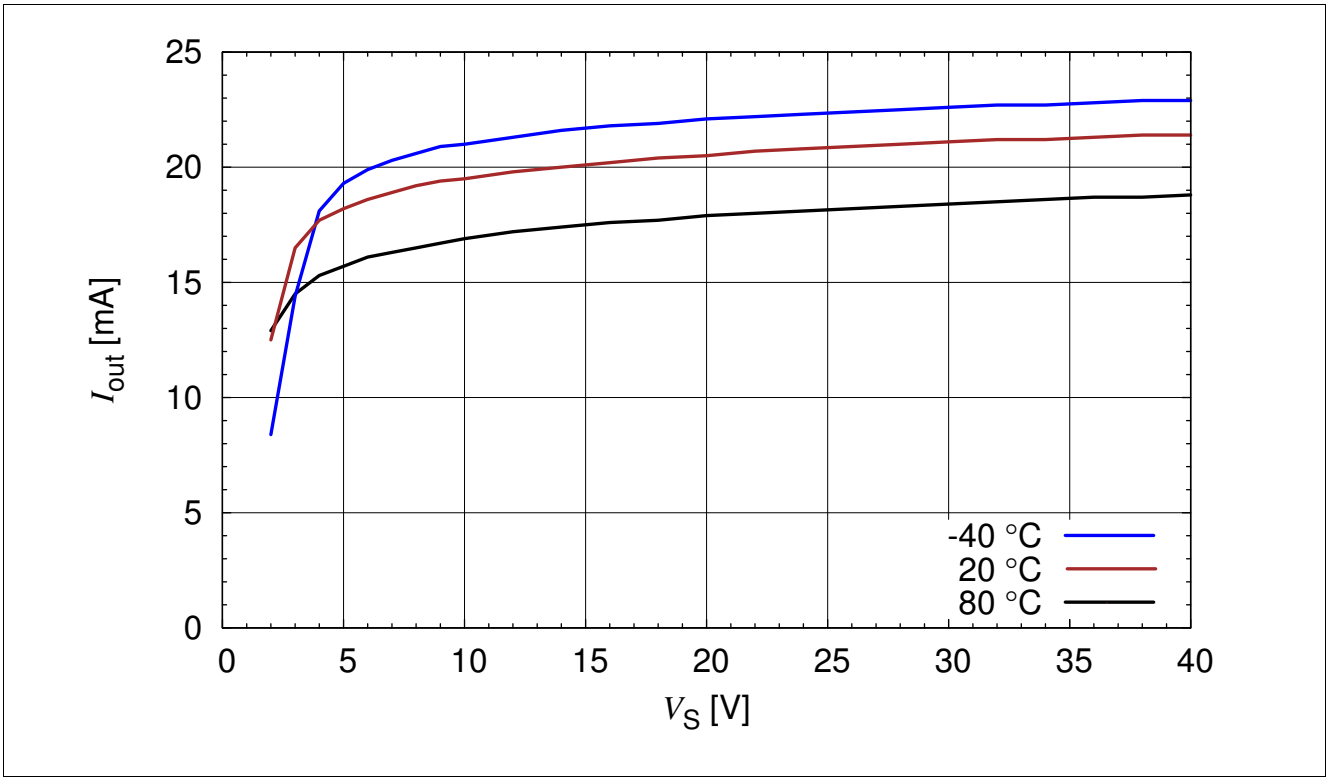

Figure 3-7 Output Current versus V_S $I_{out} = f(V_S)$, $V_S - V_{out}$ = 1.4 V, T_A = Parameter

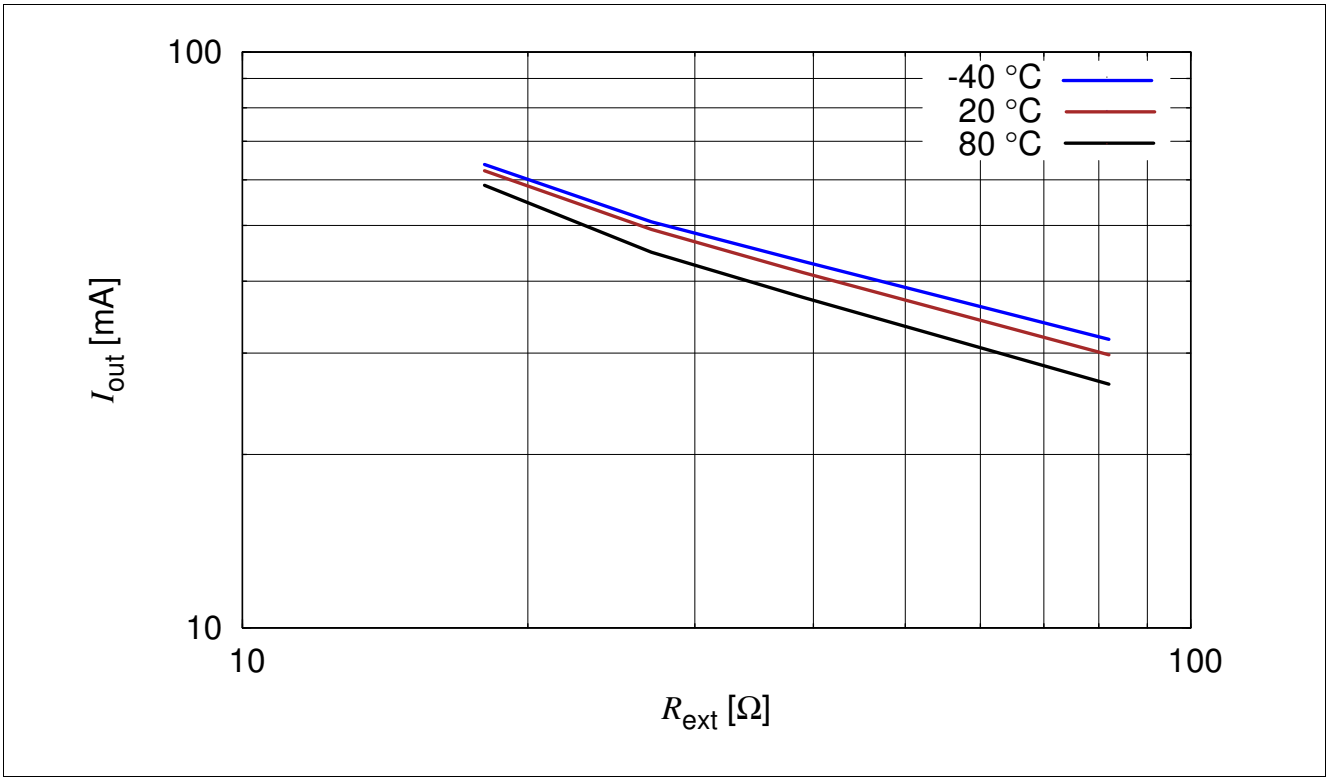

Figure 3-8 Output Current versus R_{ext} $I_{out} = f(R_{ext})$, V_S = 10 V, V_S - V_{out} = 1.4 V, T_A = Parameter

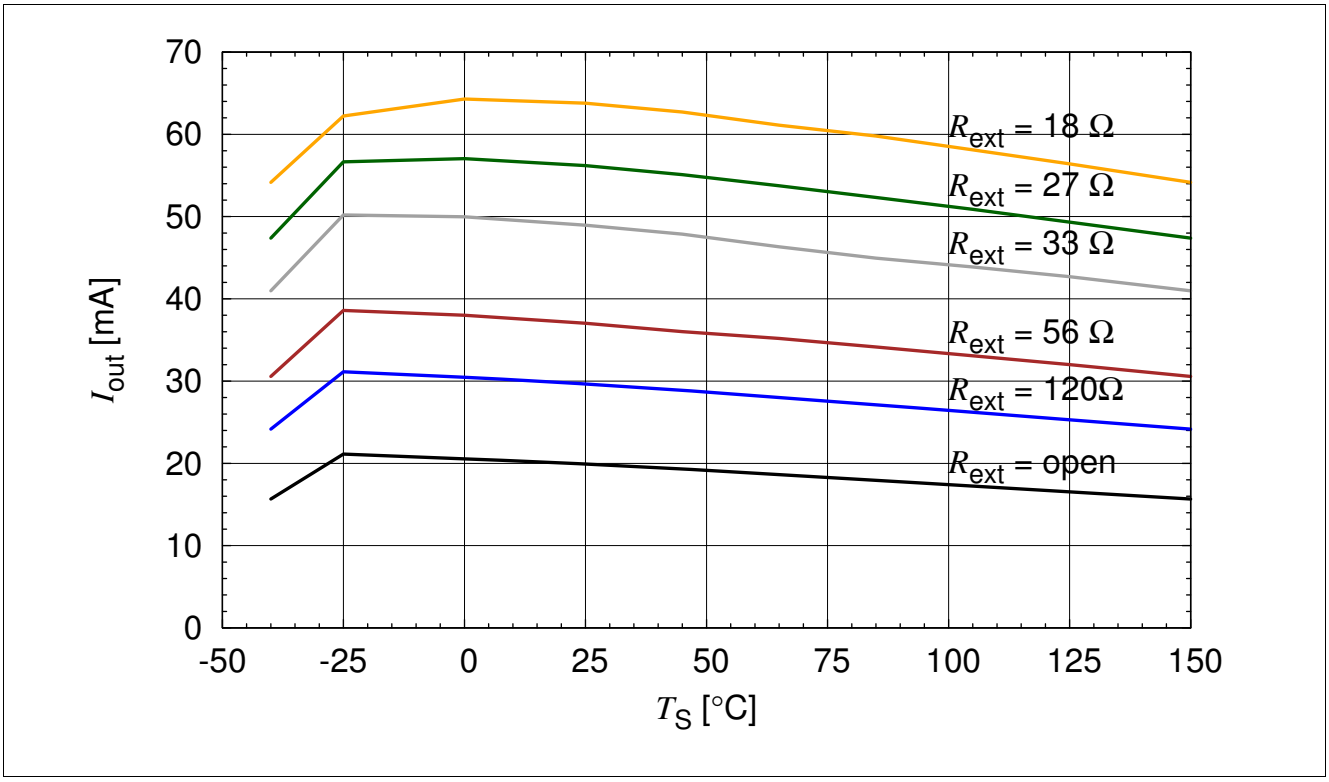

Figure 3-9 Output Current versus T_S $I_{out} = f(T_S)$, V_S = 10 V, V_S - V_{out} = 1.4 V, R_{ext} = Parameter

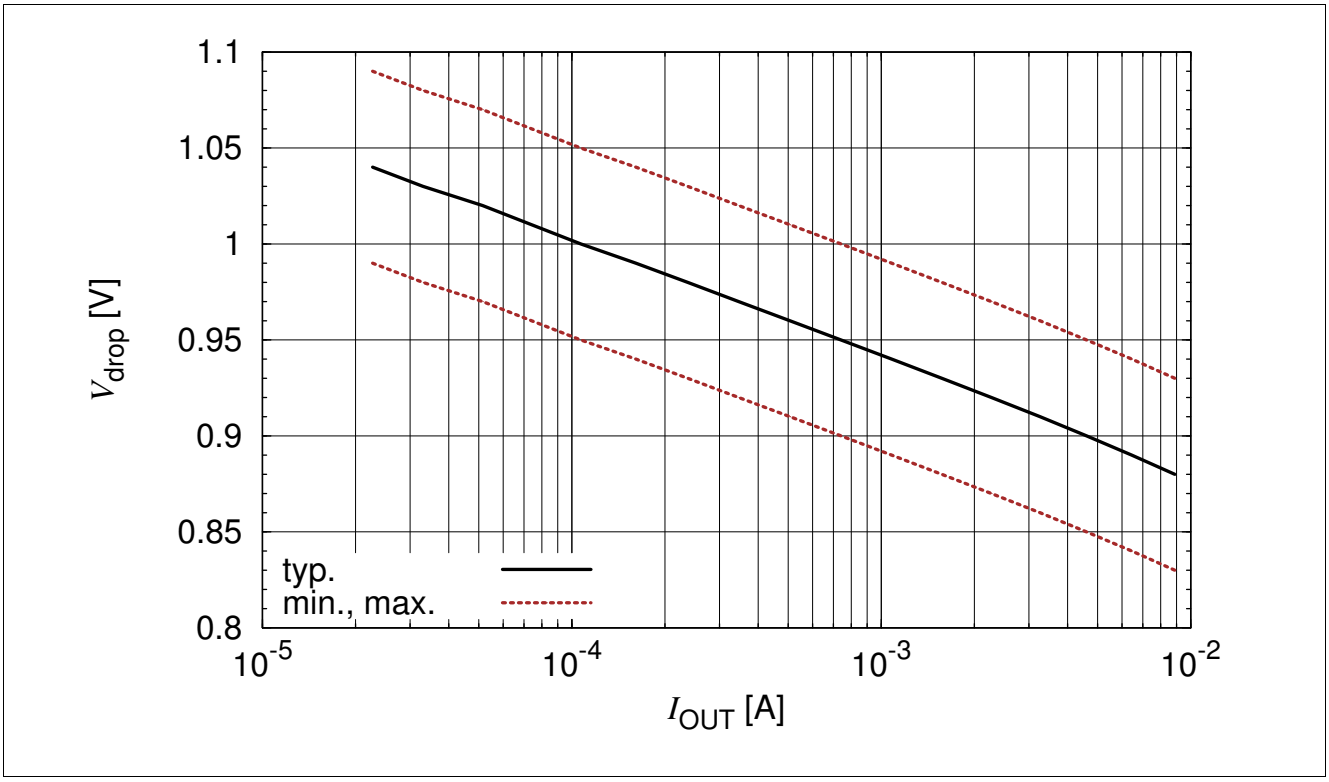

Figure 3-10 Reference Voltage V_{drop} vs I_{out} $V_{drop} = f(I_{out})$, I_{out} = 10 µA to 10 mA

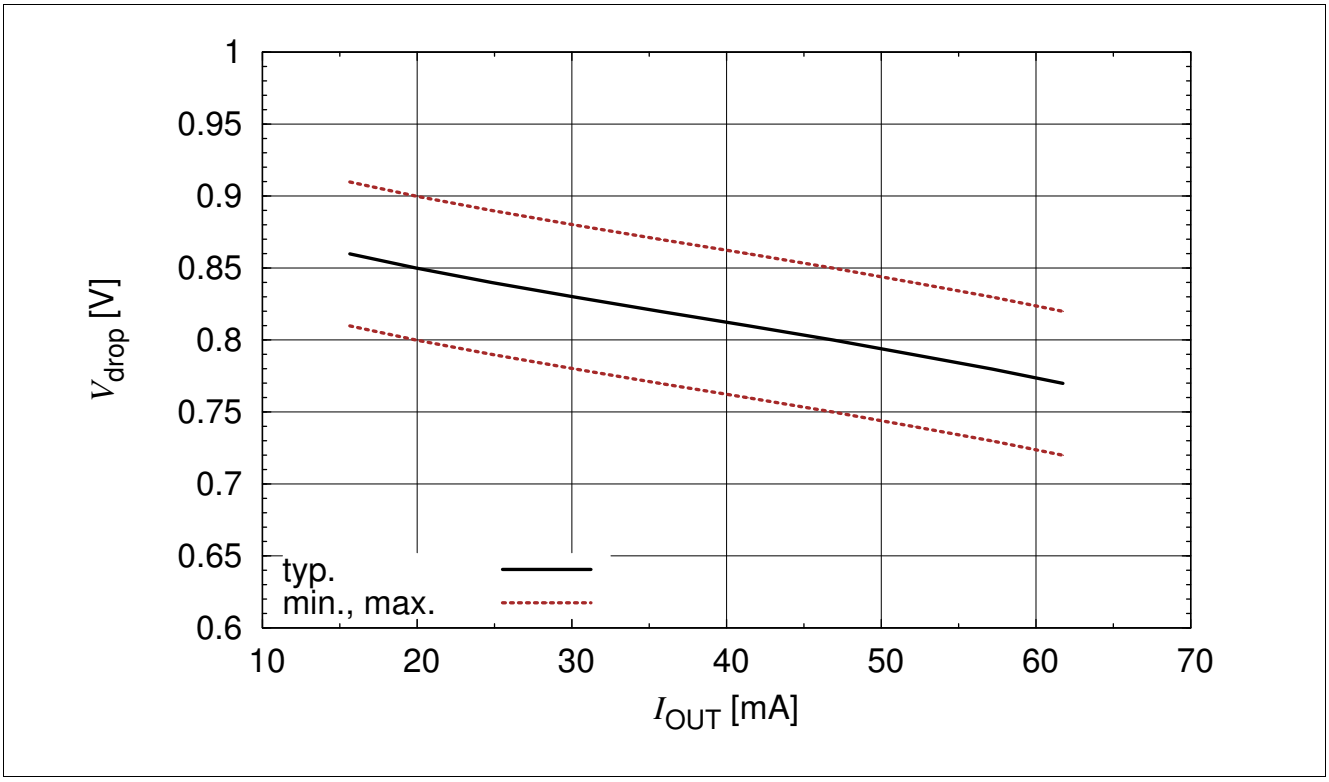

Figure 3-11 Reference Voltage V_{drop} vs I_{out} $V_{drop} = f(I_{out})$, I_{out} = 10 mA to 65 mA

4 Application hints

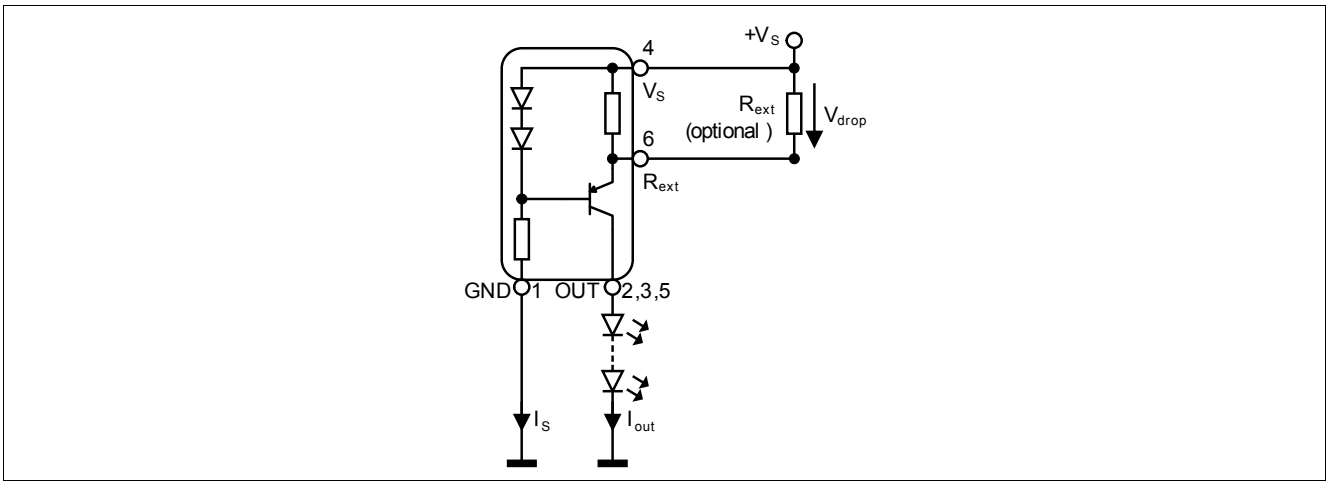

Figure 4-1 Application Circuit: Stand alone current source

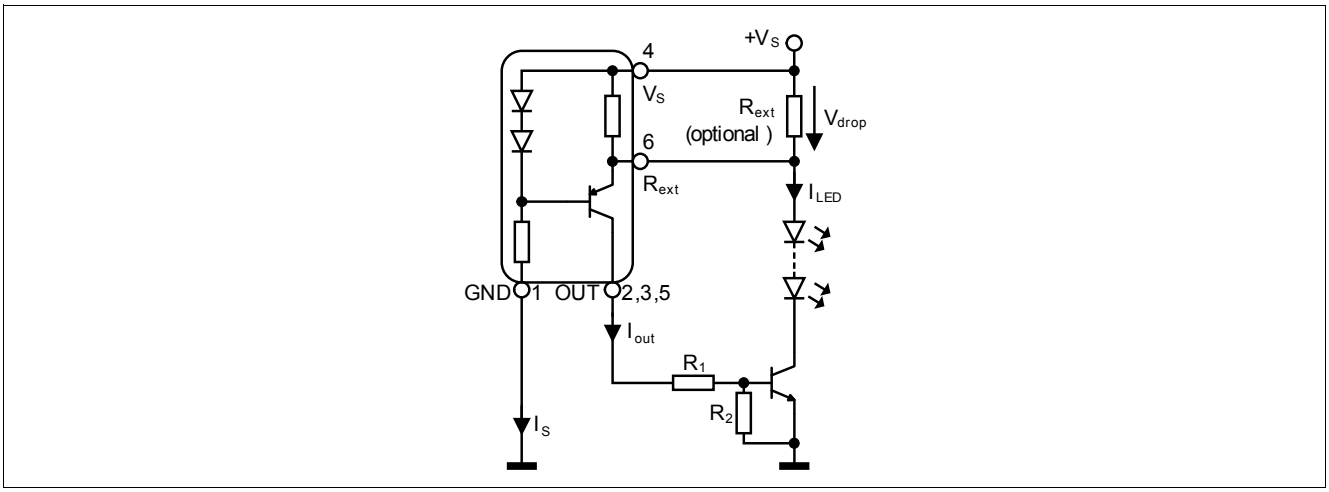

Figure 4-2 Application Circuit: Boost mode current source with external power transistor

Application hints

BCR 402U E6327 serves as an easy to use constant current source for LEDs. In stand alone application an external resistor R_{ext} can be connected to adjust the current between 20 mA and 65 mA. R_{ext} can be determined by using **Figure 3-8**. Connecting a low tolerance resistor R_{ext} will improve the overall accuracy of the current sense resistance formed by the parallel connection of R_{int} and R_{ext} leading to an improved current accuracy. Please take into account that the resulting output currents will be slightly lower due to the self heating of the component and the negative thermal coefficient.

In boost mode configuration the LED current can be extended to drive high power LEDs. Please visit our web site **www.infineon.com/lowcostleddriver** for detailed application notes.

5 Package

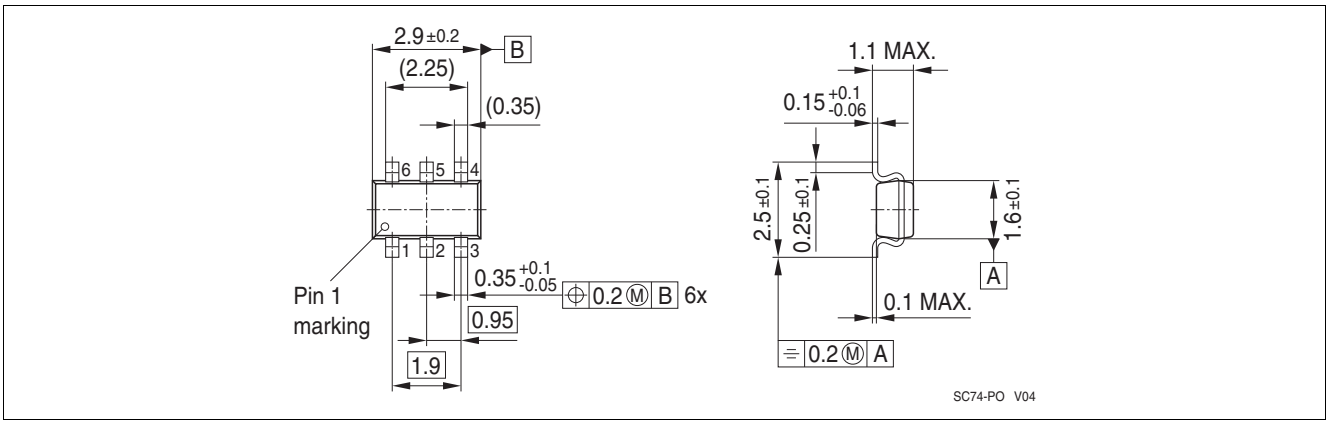

Figure 5-1 Package Outline for SC74 (dimensions in mm)

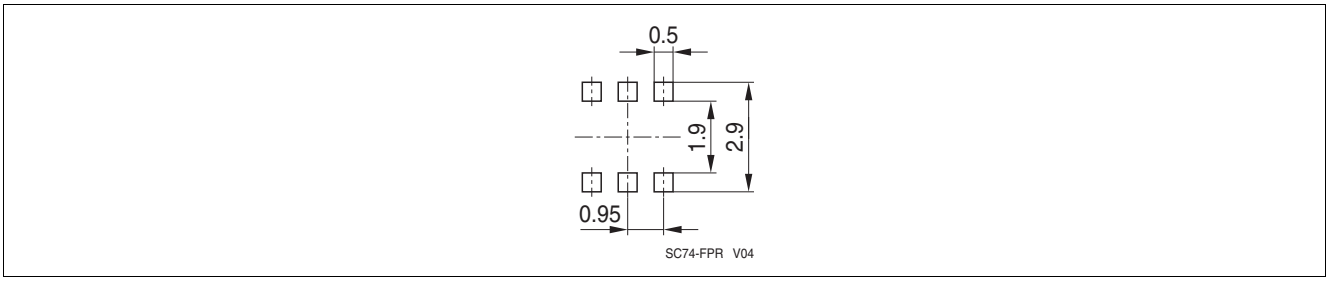

Figure 5-2 Package Footprint for SC74 (dimensions in mm)

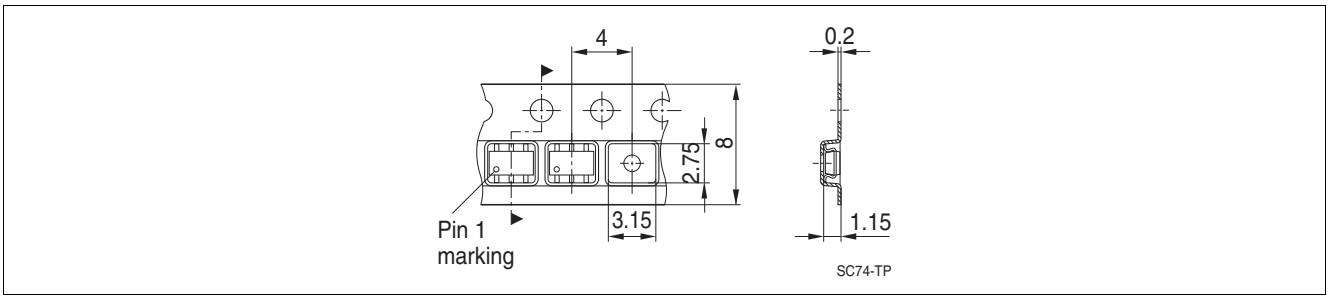

Figure 5-3 Tape and Reel Information for SC74 (dimensions in mm)

Terminology

$\Delta I_{out}/I_{out}$	Output current change
h_{FE}	DC current gain
I_{EN}	Enable current
I_{LED}	LED current
I_{out}	Output current
I_R	Reverse current
LED	Light Emitting Diode
PCB	Printed Circuit Board
P_{tot}	Total power dissipation
PWM	Pulse Width Modulation
R_B	Bias resistor
R_{ext}	External resistor
R_{int}	Internal resistor
RoHs	Restriction of Hazardous Substance directive
R_{thJS}	Thermal resistance junction to soldering point
T_A	Ambient temperature
T_J	Junction temperature
T_S	Soldering point temperature
T_{stg}	Storage temperature
$V_{BR(CEO)}$	Collector-emitter breakdown voltage
V_{BR}	Breakdown voltage
V_{drop}	Voltage drop
V_{EN}	Enable voltage
V_{out}	Output voltage
V_R	Reverse voltage
V_S	Supply voltage
V_{Smin}	Lowest sufficient supply voltage overhead

w w w . i n f i n e o n . c o m

Published by Infineon Technologies AG