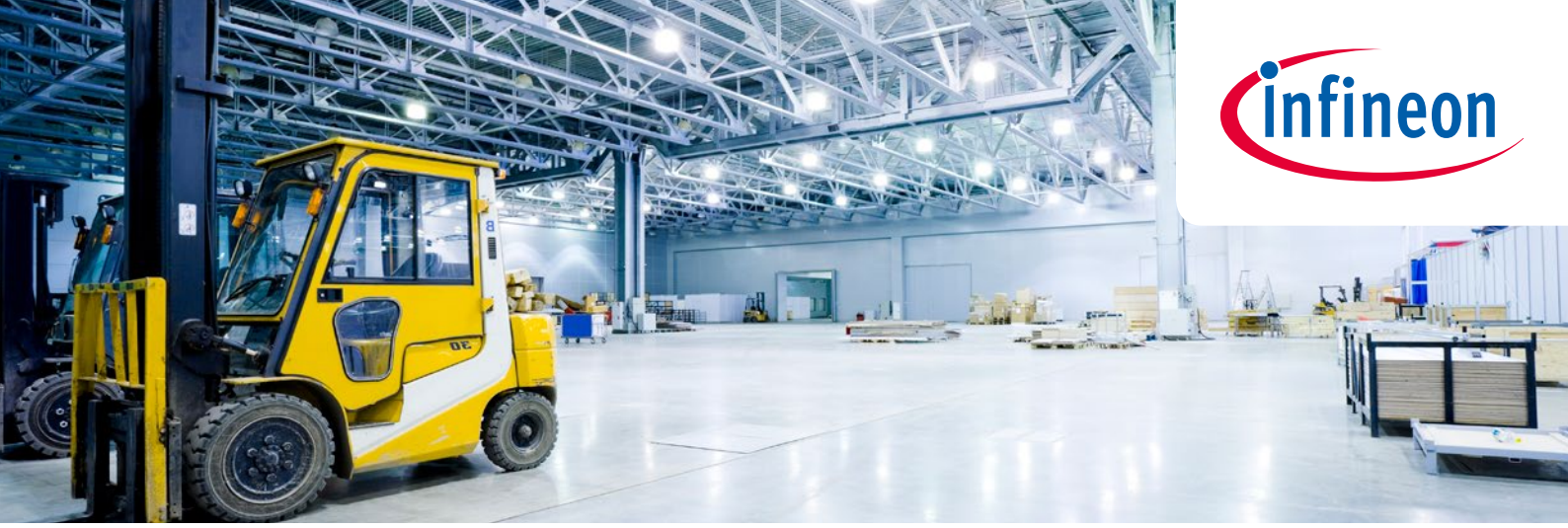

Application Brief

Infineon's System Solution for Battery Powered Motor Drives

Based on industry leading technology, the highest quality and manufacturing expertise, Infineon provides a variety of innovative power semiconductors which enable designers to develop highly reliable and efficient solutions for all kinds of drive applications.

Key enabling products are:

- Low Voltage Power MOSFETs – OptiMOS™
- Gate Drivers – EiceDRIVER™ Compact
- Microcontrollers – XMC
- Magnetic Sensors

Infineon offers a comprehensive portfolio to address a broad range of battery powered motor control applications such as Forklift, e-Scooter, Pedelecs, Low Speed Cars and many others.

Power MOSFETs

Driver ICs

Micro-controller

Magnetic Sensors

Benefits of Infineon components

- Reliable and robust products for highest system durability and reliability
- Lowest $R_{DS(on)}$ 0.7mΩ in TOLL and highest current 300A capability for highest system efficiency
- Small form factors for compact design e.g. SuperS08 30mm², TOLL 115mm² leading to reduction of overall system size and cost
- Evaluation boards for fast prototyping and testing and in-depth system support enable reduction of development time and cost

Further Information

- www.infineon.com/optimos
- www.infineon.com/xmc
- www.infineon.com/eicedriver
- www.infineon.com/sensors

www.infineon.com/motorcontrol

Infineon's System Solution for Battery Powered Motor Drives

Typical Low Voltage Application: Battery Powered 3-Phase System

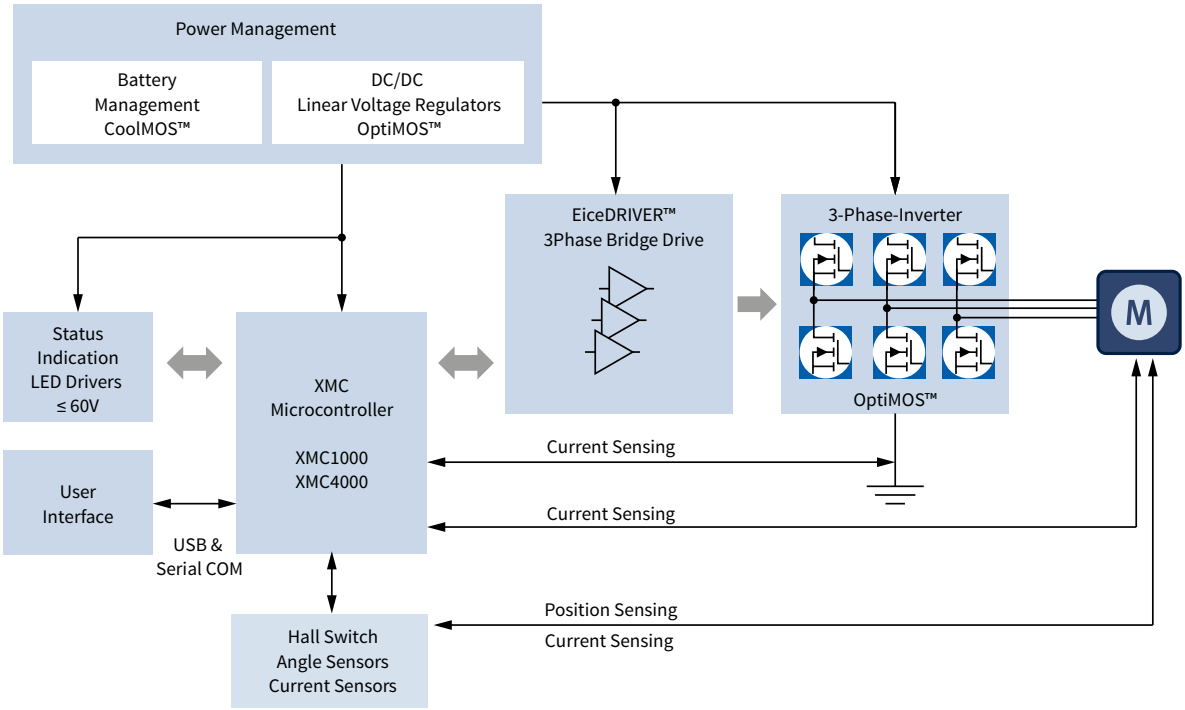

For more detailed information, please explore our broad portfolio: www.infineon.com

To shorten customer development cycle time and cost we offer a complete portfolio of low-voltage motor control application kits:

XMC1000 Motor Control Application Kit	XMC4000 Motor Control Application Kit	300W Motor Control Application Kit	Evaluation Board 5kW TO-Leadless
		www.infineon.com/motorcontrolapplicationkit	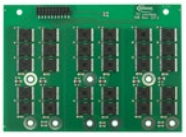 www.infineon.com/to-leadless-evaluationboard

Published by
Infineon Technologies Austria AG
9500 Villach, Austria

© 2014 Infineon Technologies AG.
All Rights Reserved.

Visit us:
www.infineon.com

Order Number: B111-H9882-X-X-7600-DB2014-0003
Date: 07 / 2014

Attention please!
The information given in this document shall in no event be regarded as a guarantee of conditions or characteristics ("Beschaffenheitsgarantie"). With respect to any examples or hints given herein, any typical values stated herein and/or any information regarding the application of the device, Infineon Technologies hereby disclaims any and all warranties and liabilities of any kind, including without limitation warranties of non-infringement of intellectual property rights of any third party.

Information
For further information on technology, delivery terms and conditions and prices please contact your nearest Infineon Technologies Office (www.infineon.com).

Warnings
Due to technical requirements components may contain dangerous substances. For information on the types in question please contact your nearest Infineon Technologies Office. Infineon Technologies Components may only be used in life-support devices or systems with the express written approval of Infineon Technologies, if a failure of such components can reasonably be expected to cause the failure of that life-support device or system, or to affect the safety or effectiveness of that device or system. Life support devices or systems are intended to be implanted in the human body, or to support and/or maintain and sustain and/or protect human life. If they fail, it is reasonable to assume that the health of the user or other persons may be endangered.