XDPL8220-50W_V53.SchDoc

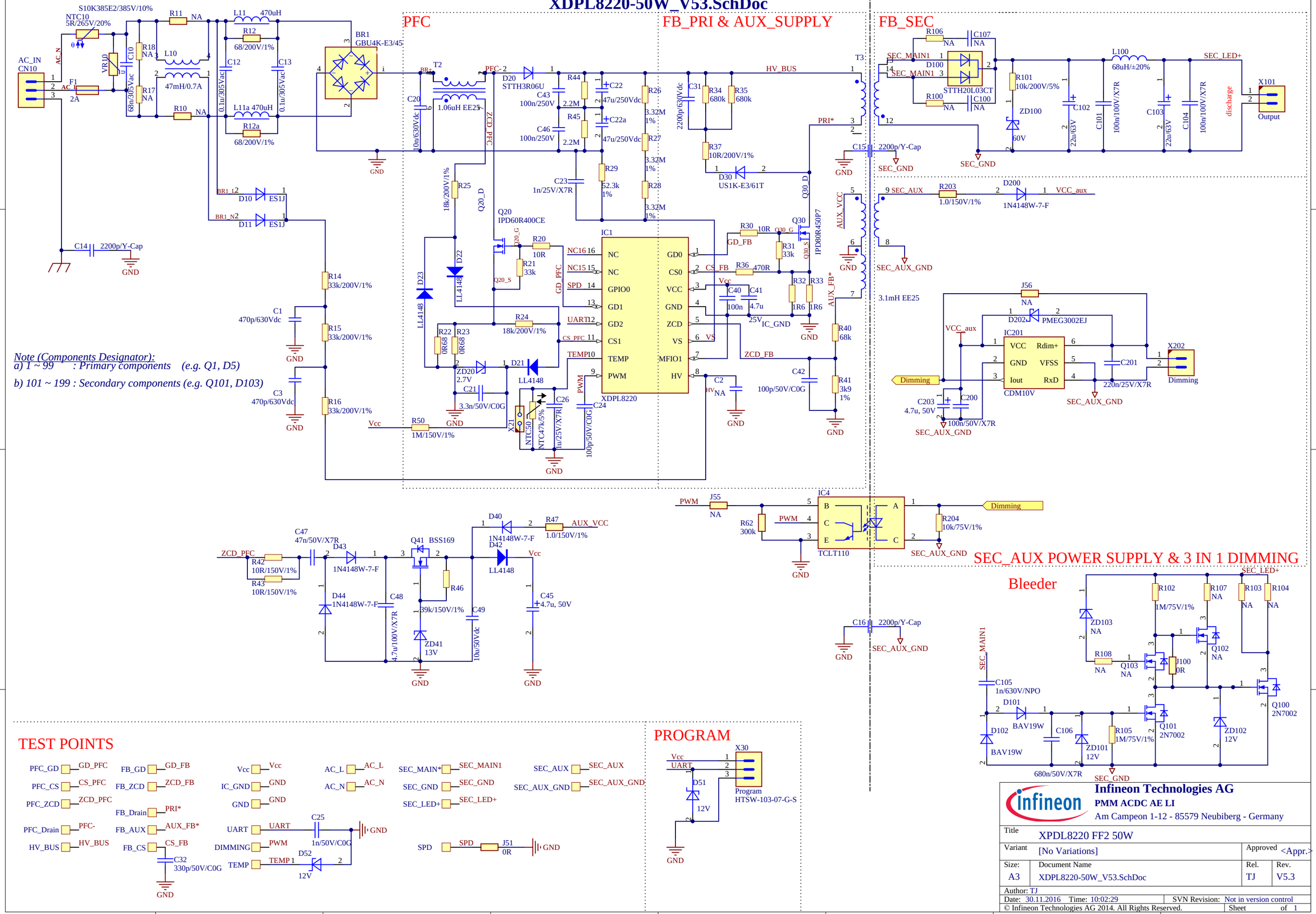

Note (Components Designator):
a) 1 ~ 99 : Primary components (e.g. Q1, D5)
b) 101 ~ 199 : Secondary components (e.g. Q101, D103)

Infineon Technologies AG
PMM ACDC AE LI
Am Campeon 1-12 - 85579 Neubiberg - Germany

Title	XPDL8220 FF2 50W		
Variant	[No Variations]	Approved	<Appr.>
Size: A3	Document Name: XDPL8220-50W_V53.SchDoc	Rel. TJ	Rev. V5.3
Author: TJ			
Date: 30.11.2016 Time: 10:02:29	SVN Revision: Not in version control		

© Infineon Technologies AG 2014. All Rights Reserved.
Sheet of 1