Product Brief

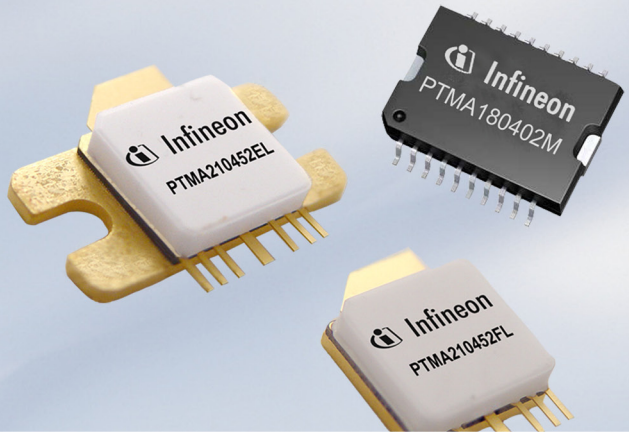

Integrated RF Power Amplifiers

700 MHz to 2200 MHz

Infineon's family of LDMOS integrated RF power amplifiers consists of two-stage 15 W, 30 W, 40 W and 45 W internally-matched single-chip ICs covering all typical cellular base station modulation formats from 700 MHz to 2.2 GHz. Thermally-enhanced ceramic open-cavity and molded-plastic packages offer cool and reliable operation.

Features

- Wide RF modulation bandwidths and low memory effects
- Operation from 700 MHz to 2.2 GHz
- High gain and broadband on-chip matching
- Excellent thermal stability
- RoHS-compliant
- Integrated ESD protection
- Reference circuits available

Product Summary

Product	Operating Frequency [MHz]	P_{1dB} Typ [W]	Gain Typ [dB]	PAE Typ [%]	P_{OUT} Avg [W]	Test Signal	θJC [°C/W]	Package Type
PTMA080152M	700–1000	20	30	34	8	GSM/EDGE	8.5/2.5	PG-DSO-20-63
PTMA080302M	700–1000	30	31	36	15	GSM/EDGE	6.7/1.7	PG-DSO-20-63
PTMA080304M	700–1000	2x15	30	33	8	GSM/EDGE	8.5/2.5	PG-DSO-20-63
PTMA180402EL	1800–2000	40	30	14	4	CDMA	3.5/1.1	H-33265-8
PTMA180402FL	1800–2000	40	30	14	4	CDMA	3.5/1.1	H-34265-8
PTMA180402M	1800–2000	40	30	16	5	CDMA	3.6/1.5	PG-DSO-20-63
PTMA210152M	1800–2000	20	28.5	33	7	WCDMA	10.7/2.9	PG-DSO-20-63
PTMA210452EL	1900–2200	45	28	10.5	3.2	WCDMA	3.5/1.3	H-33265-8
PTMA210452FL	1900–2200	45	28	10.5	3.2	WCDMA	3.5/1.3	H-34265-8

Note: Typical supply voltage is at 28 V

[www.infineon.com/rfpower]

Integrated RF Power Amplifiers

700 MHz to 2200 MHz

Broadband Performance

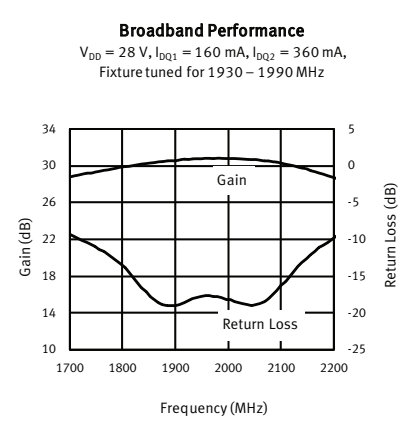

PTMA180402M

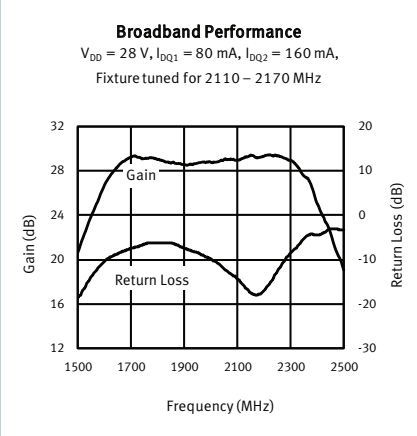

PTMA210152M

Available Packages

Molded Plastic

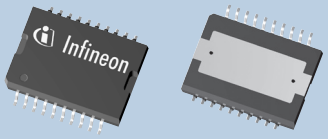

PG-DSO-20-63

Open Cavity

H-33265-8 H-34265-8

PTMA080304M

Dual (2x15 W) Integrated Amplifiers

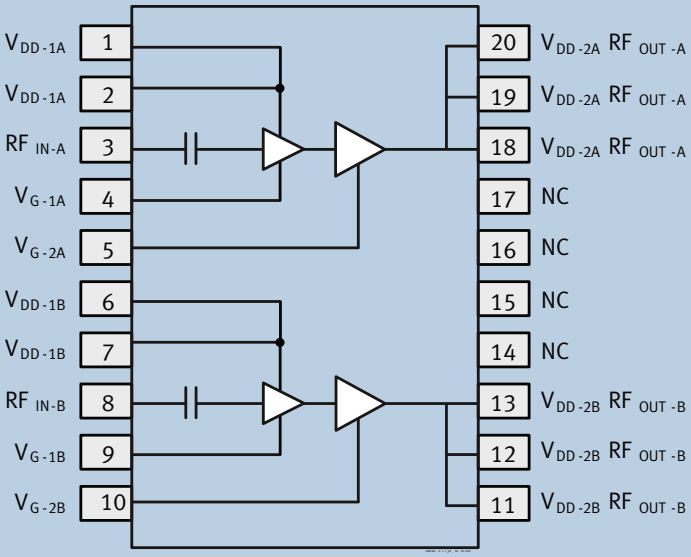

Source: Plated copper heatslug on backside of package

Features

- Typical channel isolation = 20 dB
- Typical CW single channel performance, 960 MHz, 28 V
  - P_{OUT} = 20 W
  - Efficiency = 50%
- Typical GSM / EDGE performance of each channel, 960 MHz, 28 V
  - Average output power = 8 W
  - Gain = 30 dB
  - Efficiency = 33%
  - EVM = 1.91%
  - ACPR @ 400 KHz = –63 dBc
  - ACPR @ 600 KHz = –76 dBc
- Capable of handling 10:1 VSWR @ 28 V, 15 W (CW) output power
- Integrated ESD protection. Meets HBM Class 1B (minimum), per JESD22-A114F
- RoHS-compliant

Published by
Infineon Technologies AG
85579 Neubiberg, Germany

© 2012 Infineon Technologies AG.
All Rights Reserved.

Visit us:
www.infineon.com

Order Number: B154-H9241-G2-X-7600
Date: 02 / 2012

ATTENTION PLEASE!
The information given in this document shall in no event be regarded as a guarantee of conditions or characteristics ("Beschaffenheitsgarantie"). With respect to any examples or hints given herein, any typical values stated herein and/or any information regarding the application of the device, Infineon Technologies hereby disclaims any and all warranties and liabilities of any kind, including without limitation warranties of non-infringement of intellectual property rights of any third party.

INFORMATION
For further information on technology, delivery terms and conditions and prices please contact your nearest Infineon Technologies Office (www.infineon.com).

WARNINGS
Due to technical requirements components may contain dangerous substances. For information on the types in question please contact your nearest Infineon Technologies Office. Infineon Technologies Components may only be used in life-support devices or systems with the express written approval of Infineon Technologies, if a failure of such components can reasonably be expected to cause the failure of that life-support device or system, or to affect the safety or effectiveness of that device or system. Life support devices or systems are intended to be implanted in the human body, or to support and/or maintain and sustain and/or protect human life. If they fail, it is reasonable to assume that the health of the user or other persons may be endangered.