Main Inverter

Infineon's virtual show 2020

Electrification – the way forward to Zero C02
Let's make E-Mobility work!

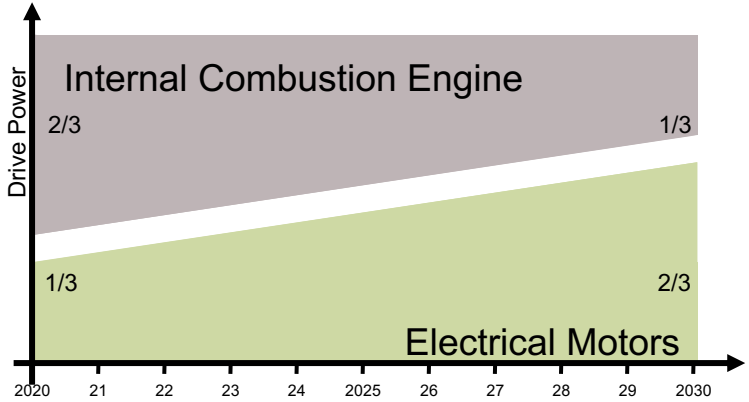

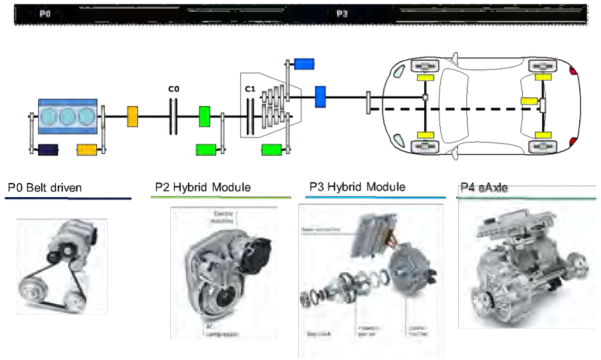

- **Regionally different** approaches to grow xEV share. Legislations and subsidies are vital.
- Cost delta of **ICE / xEV is getting closer**, quickly. xEV now in mainstream market segments.
- **Charging infrastructures** are growing fast (7m WW.2019).
- Improvements on **driving range and efficiency** are ongoing. Further declines in battery cost expected.

From 100% ICE to electrification

Impact to developing an xEV as well as the supply chain roles

… to 100% EV with ICE extension

Copyright © Infineon Technologies AG 2020. All rights reserved.

Main Inverter
Value Drivers

Value Drivers	Increase Efficiency	Cost Reduction	Performance Increase	Functional Safety
Solutions	› Next gen power technologies IGBT/SiC › Gate driver slew rate control	› Motor position signal acquisition › Replacement of resolver IC › Function integration	› Multi-core enables parallel development › Increased Power module density	› Implementation of safety measures in HW › ISO26262 Processes

Electrification of powertrain

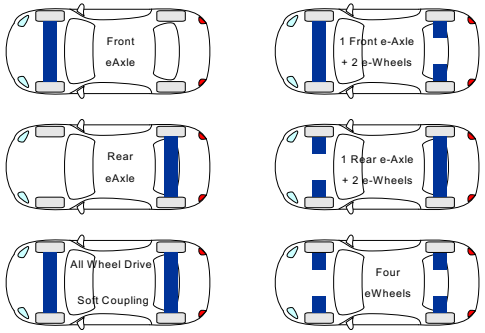

Integration & Sharing

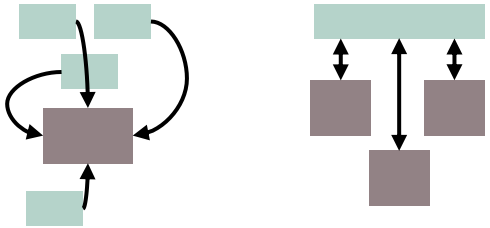

Copyright © Infineon Technologies AG 2020. All rights reserved.

Motion Ctrl., Electric Energy Mgmt., and Thermal Mgmt.
The "application" is the complete drive train

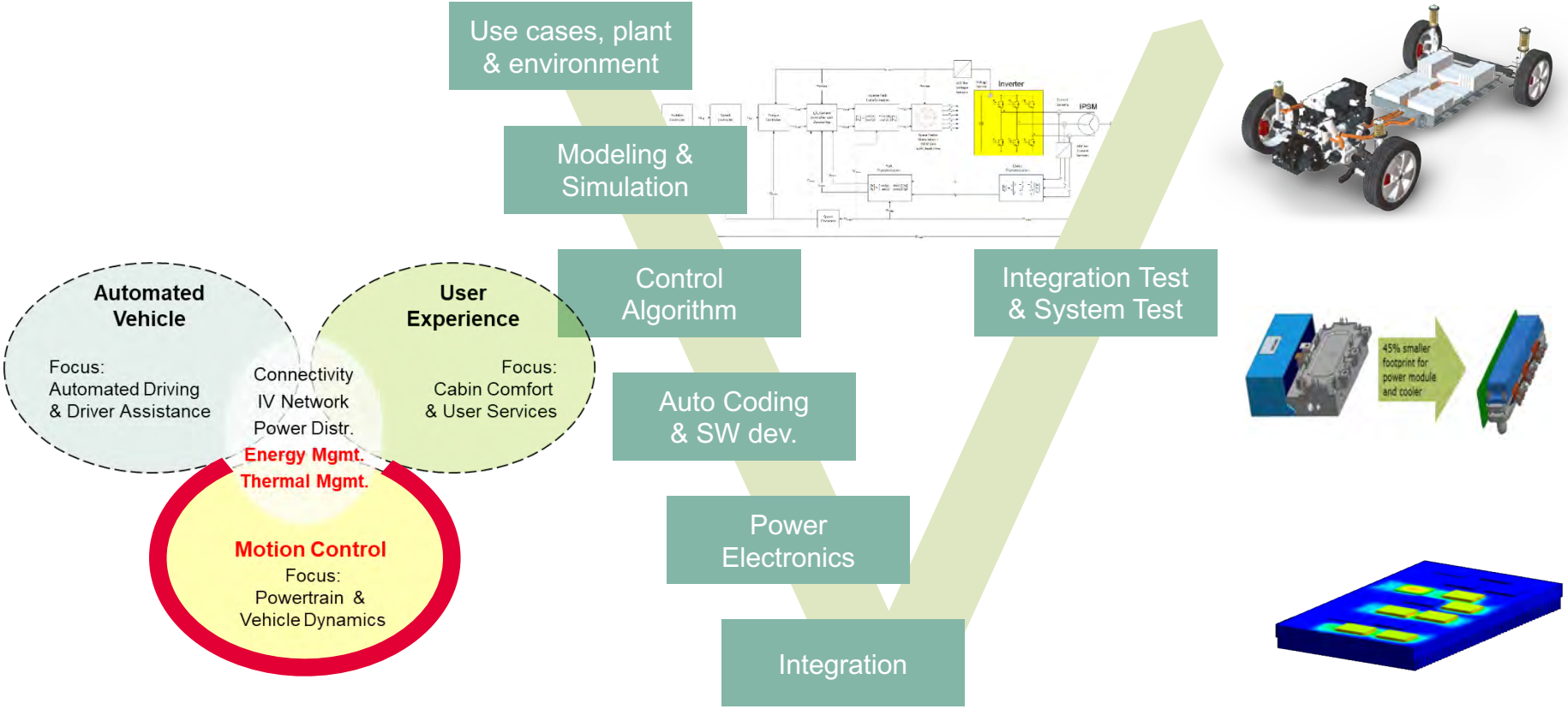

Copyright © Infineon Technologies AG 2020. All rights reserved.

Thermal Management
Challenge or Opportunity?

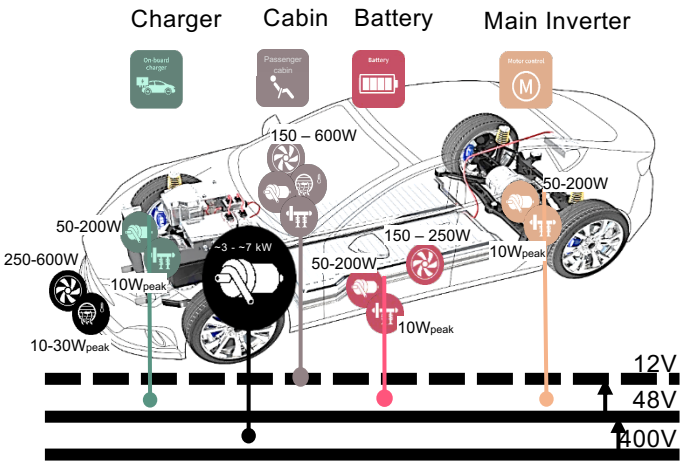

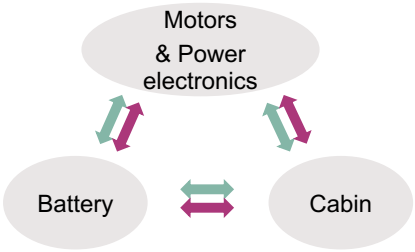

3 heating-cooling systems

Thermal management challenges

- **Heat is shared** in mainly 3 areas: e-Motor & Power electronics, Battery, and Cabin.
- Thermal management is a **distributed architecture** that should heat and also cool
- Zone type with many sensors and virtual sensors many actuators: compressor, PTC, valves, pumps, fans, flaps...

Infineon contribution

- Make the most suitable product offering for our customer success that comprises:
  - **Connectivity**
  - **Compute**
  - **Sense**
  - **Actuate**
  - **System sharing & integration**

Copyright © Infineon Technologies AG 2020. All rights reserved.

Infineon offers key components for traction motor inverters translating into strong system understanding

Microcontrollers	IFX product offering
› AURIX™	› Multi-core device › Safety & security › Scalable across xEV

Power Supply	IFX product offering
› OPTIREG™ PMIC	› Functional safety › Standby-mode › Improved EMC behavior

Gate Driver	IFX product offering
› EiceDRIVER™	› Increase system efficiency and lifetime › Reduce system cost

Current sensors	IFX product offering
› XENSIV™	› AC current measurement › ADC interface › Standalone sensor

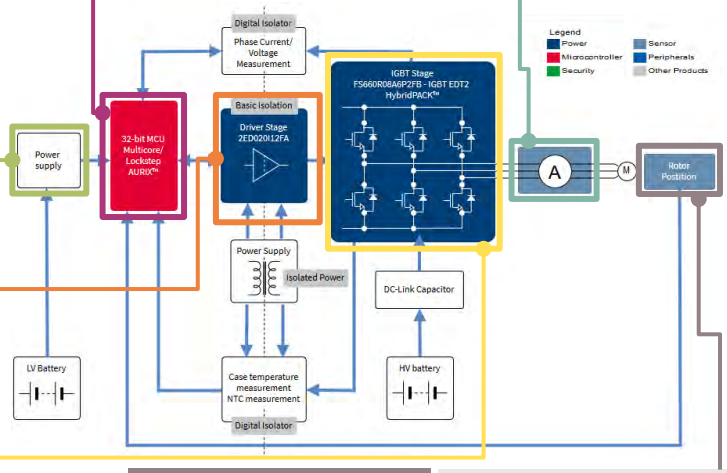

Power Module	IFX product offering
› HybridPACK™ Drive	› Broad family › Leading IGBT tech › High volume experience

Position sensors	IFX product offering
› XENSIV™	› Integrated end-of-shaft rotor position sensing solution › More compact design

Copyright © Infineon Technologies AG 2020. All rights reserved.

Right Sizing – the right technology for the requirement Si & SiC

Infineon's virtual show 2020

CoolSiC™ Module, Bare Die & Discrete enable longer drive range in e-Mobility Main Inverter

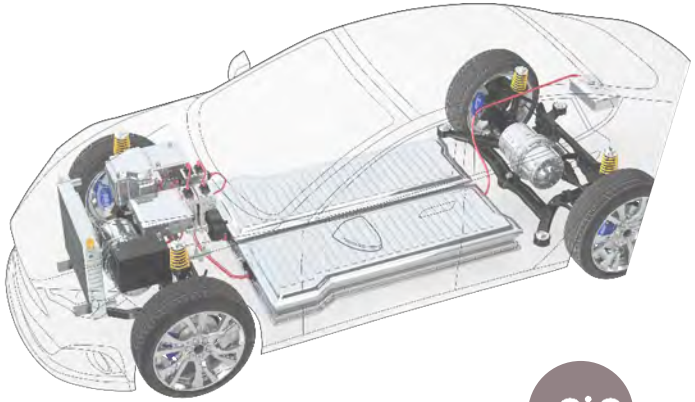

Reduced battery size, less cooling effort, lower cost in passive components, longer drive range, are a few of the benefits embracing SiC based solution in electric drive train. In 800V system, SiC based main inverter can achieve appr. 7% more range vs. its Si counterpart. OEMs adopt topologies where SiC is used in the main inverter with rear wheel drive while Si-based secondary inverter in front wheel drive, achieving good balance between efficiency & cost.

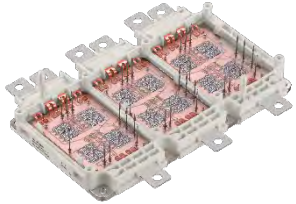

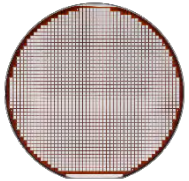

Advantages of SiC

- Increasing battery utilization by 5-10%
- Higher power density for system size reductions of up to 50%
- Lower conduction losses in light load condition and lower switching losses compared to Si IGBTs
- IFX CoolSiC™ offers superior performance without jeopardizing quality

Copyright © Infineon Technologies AG 2020. All rights reserved.

Si & SiC co-exist in main Inverter application depending on their own characteristics and system requirements

Main inverter

- Main source of power components dominated by Si-based solutions for the next decade
- SiC solutions are adopted from premium EVs, and extend to the main stream of EVs since 2020.

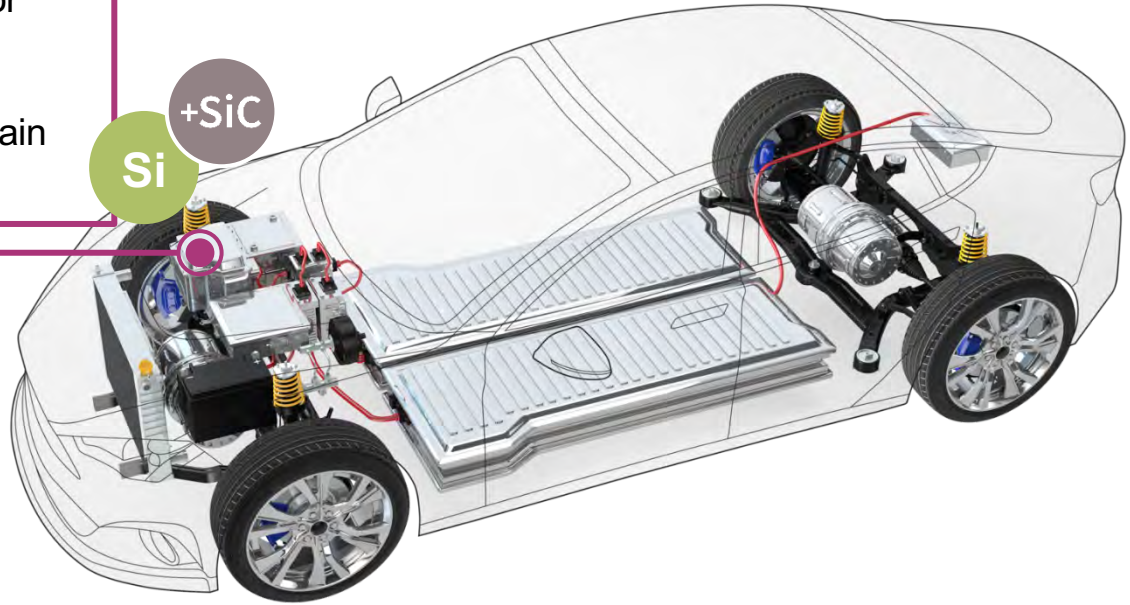

Copyright © Infineon Technologies AG 2020. All rights reserved.

To meet best cost-performance ratio in xEV drivetrain, IGBT and SiC technologies will co-exist

Selected examples of IGBT versus SiC

Example: All-wheel drive BEV

Axle 1 | Axle 2

Focus on
- Range: **SiC**
- Cost
  - Large battery: **SiC**
  - Small battery: **IGBT**

Focus on cost only: **IGBT**

Example: Axle split PHEV

Axle 1 | Axle 2

Focus on cost only: **IGBT**

Focus on range: **Internal Combustion Engine**

Source: Infineon

Technology and market development

Choice of power semiconductor technology in main inverter

- More and more OEMs are considering SiC as an alternative to IGBTs
- OEMs' choice of main inverter technology depends on the choice of
  - range versus cost, and
  - size/cost of the battery

Market development

- Higher-volume platforms to be launched in ~2025 are being awarded over the next quarters
- To address range anxiety, OEMs shift focus to sufficient reach (for mid- to high-end cars preferably)
- To improve their CO_2 footprint online retailers need to operate fully electrified delivery vehicles

Copyright © Infineon Technologies AG 2020. All rights reserved.

System size and cost benefit with CoolSiC™ technology

Shrink battery size and cost – **by up to 10%** – thanks to improved efficiency

Smaller battery

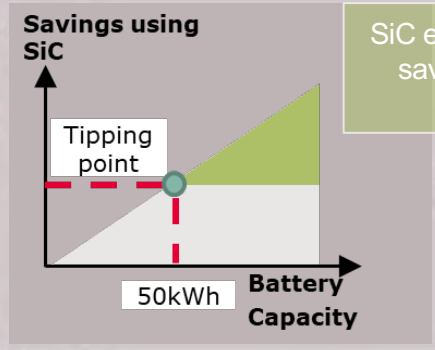

SiC enables system cost savings for batteries **>50kWh**

Up to 10% times smaller
Up to 800 euros cheaper [1)]

Higher autonomy

Up to **600 hrs** saved in charging [2)]
Up to **1864 kg CO_2** saved per vehicle [3)]

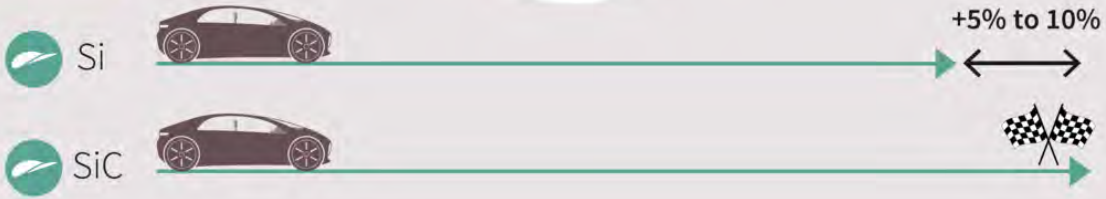

1) For a 80kWh battery, assuming 100 € / kWh

2) Example based on 15000 km/year, 40kWh battery and on a 7kW charging point

3) Source Environmental Progress

Copyright © Infineon Technologies AG 2020. All rights reserved.

With our broad product portfolio, customers can develop and scale their platforms fast

"Develop the best solution for your strategy based on industry's only complete xEV power portfolio:"
Performance, cost, time to market, support, high volume capability @ Infineon Quality

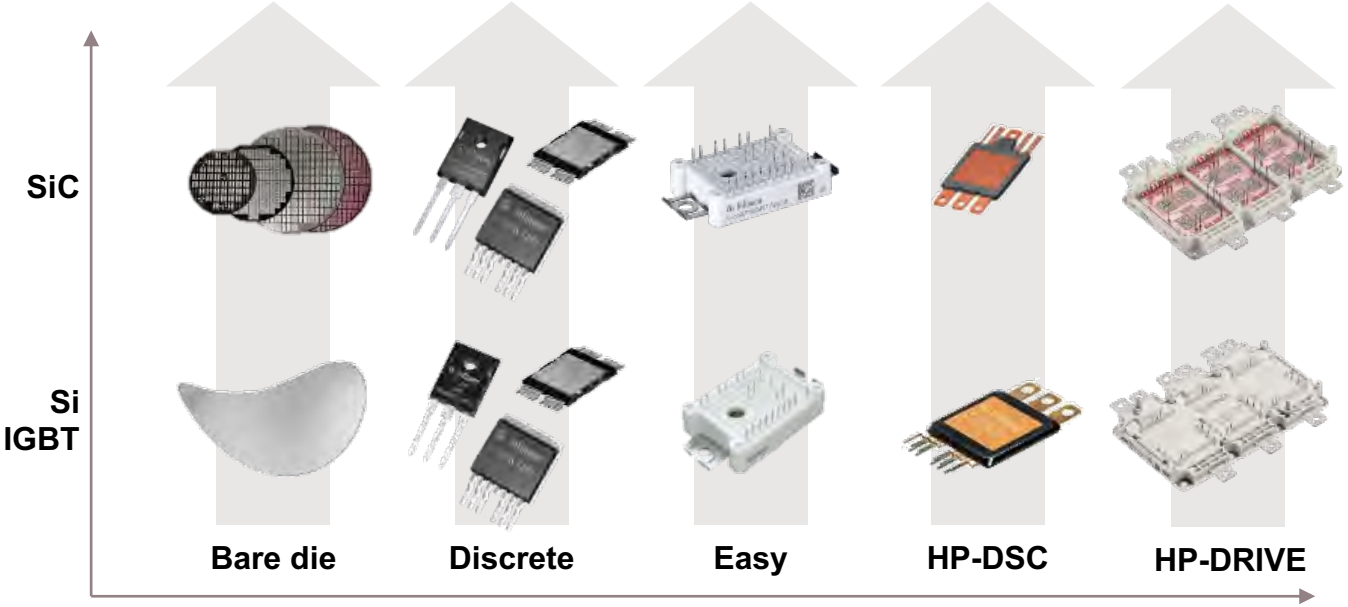

Right integration level for systems of our customer

Copyright © Infineon Technologies AG 2020. All rights reserved.

Infineon is the dependable partner with leading technologies and industry's broadest portfolio for electric vehicle inverters

Technical expertise & inverter system support

Leading technologies & IP

15+ years
experience in electromobility

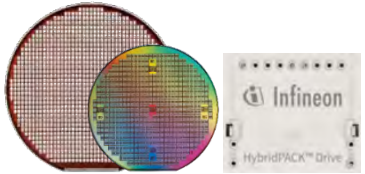

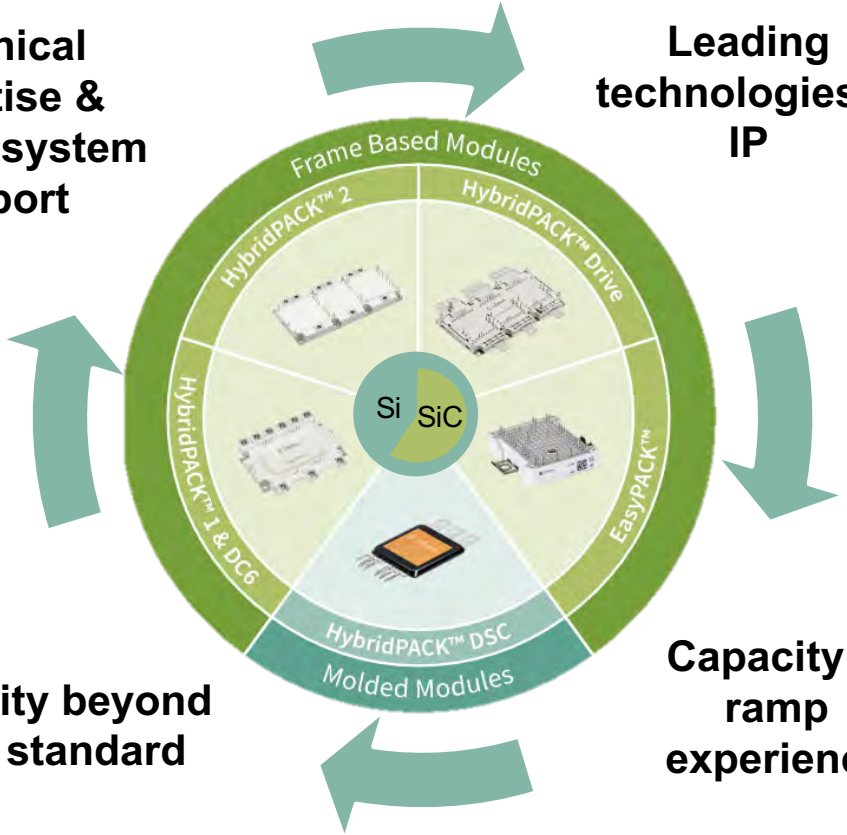

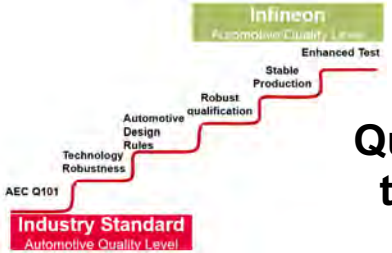

Quality beyond the standard

Capacity & ramp experience

18 Mio
pcs Automotive Power Modules shipped to date

15 out of 20
top-selling NEV of 2019 powered by Infineon

Copyright © Infineon Technologies AG 2020. All rights reserved.

HybridPACK™ & EasyPACK™ product families: right product for each system cost-performance requirement

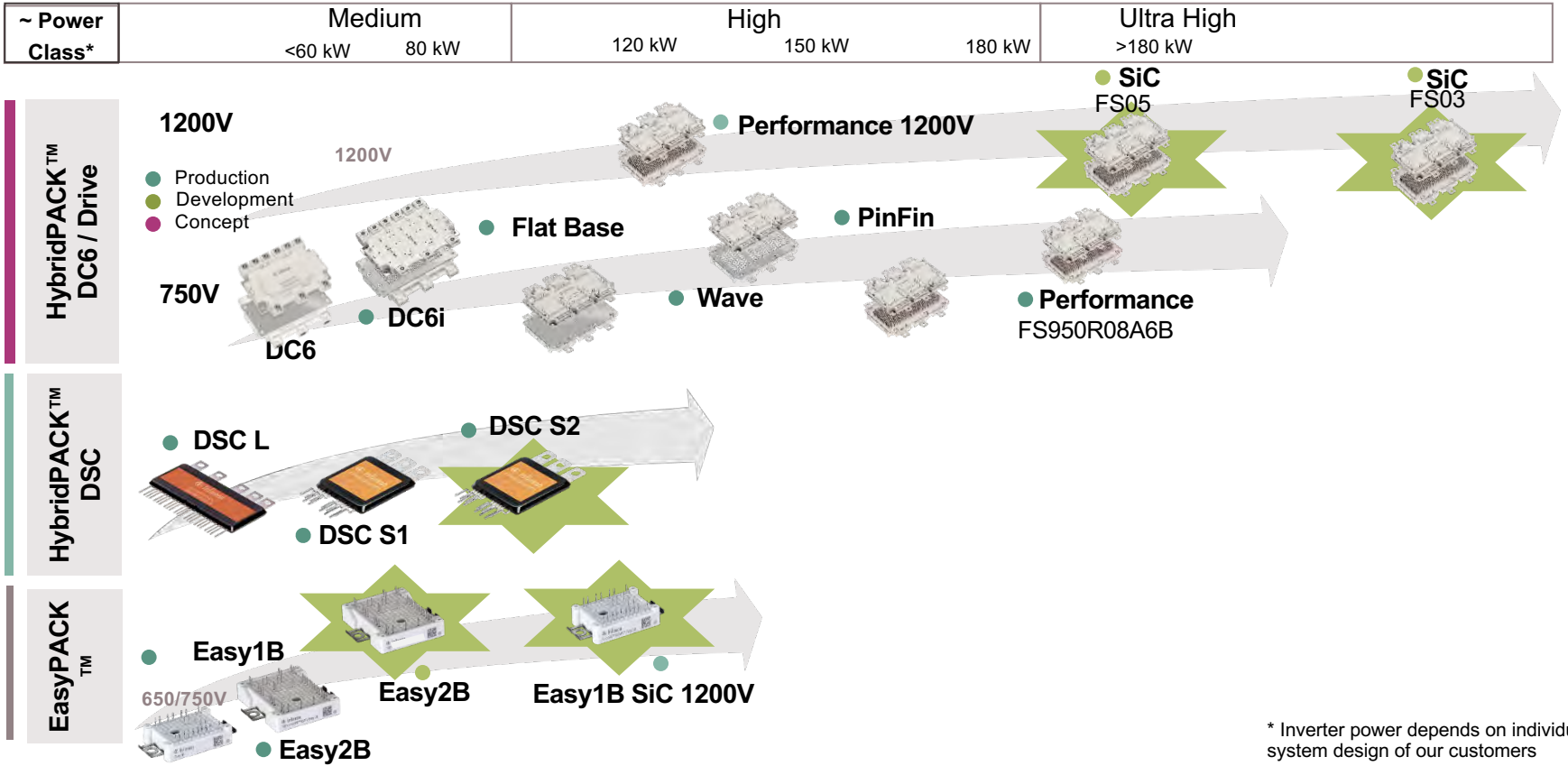

* Inverter power depends on individual system design of our customers

Copyright © Infineon Technologies AG 2020. All rights reserved.

Infineon's fine tuned SiC Trench technology out-performs Planar demonstrating more protection vs. traditional Trench

SiC Planar

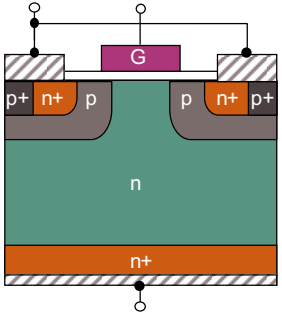

- ✓ Low complexity process
- ✓ Good shielding of oxide possible

SiC Trench

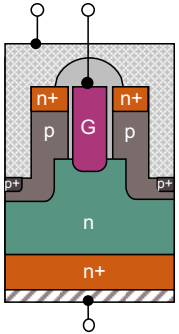

- ✓ Low channel resistance
- ✓ Shrink potential higher than in DMOS
- ○ Sophisticated process know-how needed
- x Protection of oxide corners needed

Infineon Trench

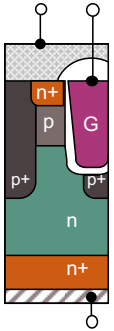

- ✓ Low channel resistance
- ✓ Shrink potential higher than in DMOS
- ✓ Oxide corners shielded by folded double trench
- ○ Sophisticated process know-how needed

- x Very low channel mobility
- x Limited shrink options

Copyright © Infineon Technologies AG 2020. All rights reserved.

2nd generation CoolSiC™ Trench MOSFET aiming to enhance the target market significantly

2nd Gen. CoolSiC™ MOSFET

Continue leadership & Enlarge market significantly

- Enhanced power handling capability by **25% – 30%**
- Enhanced **safe operating** area w.o. compromising **Quality**
- Enabling SiC in further **high volume** applications

In development

1st Gen. CoolSiC™ MOSFET

Infineon is champion: lowest loss in market

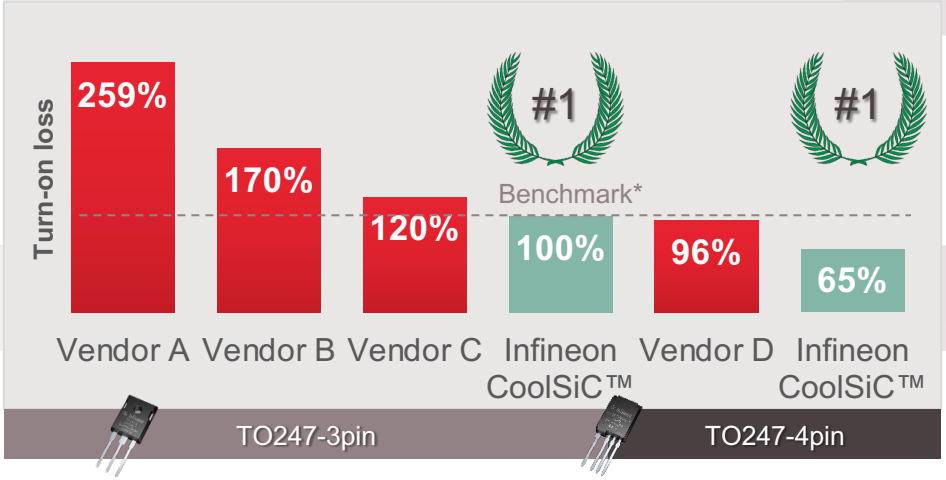

*Value is calculated in terms of loss. Higher value shows lower efficiency.

Source: Infineon, datasheets on supplier web pages, September 2019.

Copyright © Infineon Technologies AG 2020. All rights reserved.

HybridPACK™ and EasyPACK™ product families cover the full performance spectrum

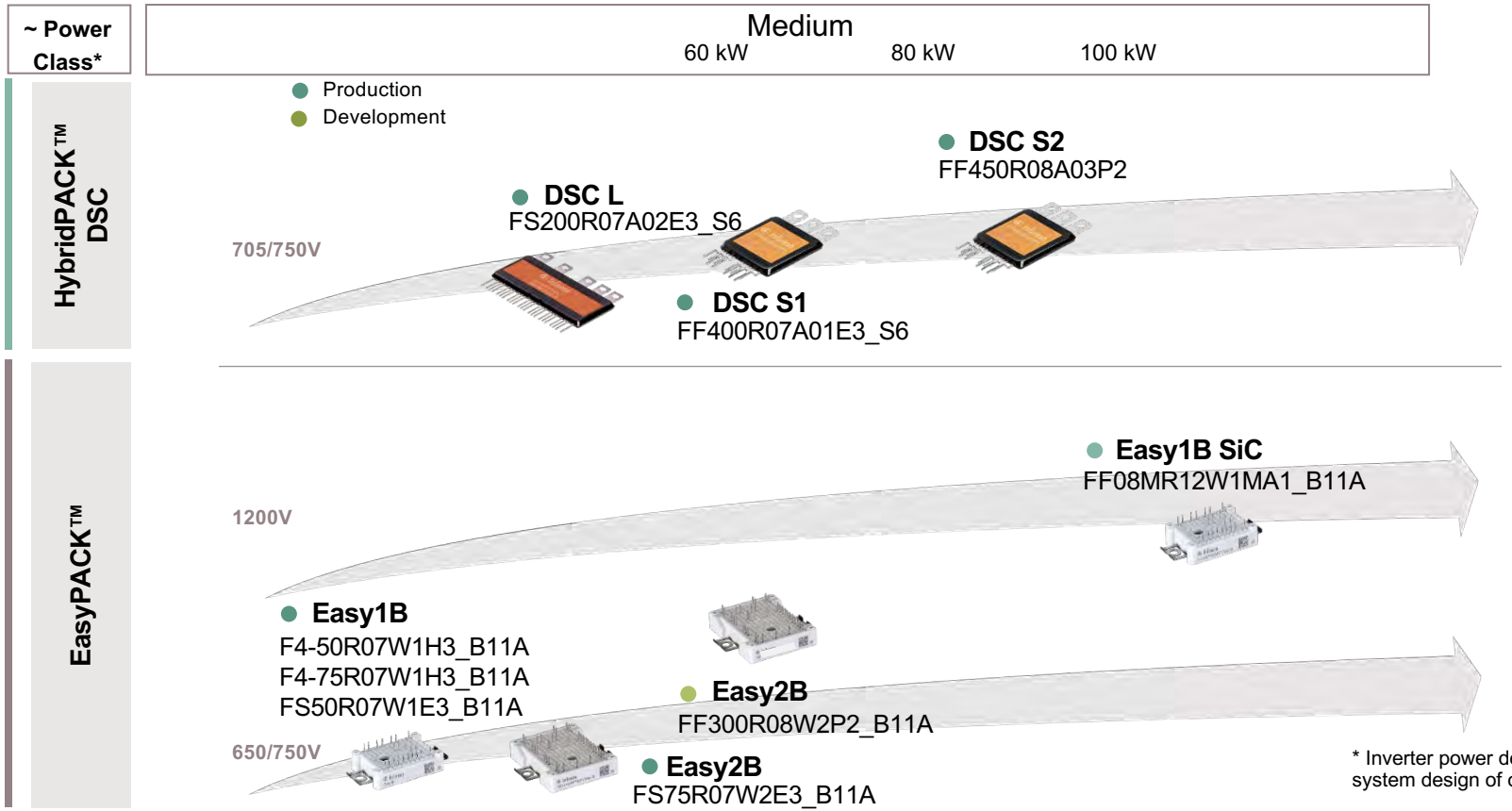

* Inverter power depends on individual system design of our customers

Copyright © Infineon Technologies AG 2020. All rights reserved.

HybridPACK™ Drive CoolSiC™: efficiency and robustness in a benchmark package

- 1200V B6 module for main inverters
- Field-proven HybridPACK Drive package
  - PressFIT, PinFin Baseplate, Si3N4 baseplate
- 2 variants: 3mOhm/5mOhm (800A / 400A rated)

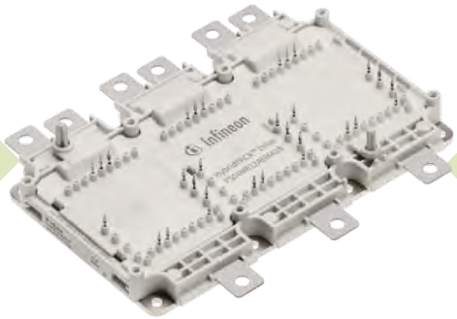

FS05MR12A6MA1(L)B: SOP H2 2020
FS03MR12A6MA1(L)B: SOP H2 2020

- Infineon CoolSiC™ Gen1 technology
  - Short circuit robustness
  - Superior gate oxide and cosmic ray reliability

Key system benefits:

Same mechanical outline as HybridPACK Drive Si → scalability up to >400Arms peak current	Superior reliability on chip and package level	Reduces inverter losses by ~60% vs. state of the art IGBT

Copyright © Infineon Technologies AG 2020. All rights reserved.

Infineon's HybridPACK™ Drive family of power modules enabling scalable inverter designs in the range of 100 kW to 180 kW*

New product highlight video: https://www.youtube.com/watch?v=VMEUZevTZyA

HybridPACK™ Drive product family:

- IGBT power modules for battery or hybrid electric vehicles
- Success story with close to 1 million parts shipped
- HybridPACK™ Drive has defined an industry standard footprint
- Complete module family with 5 variants available

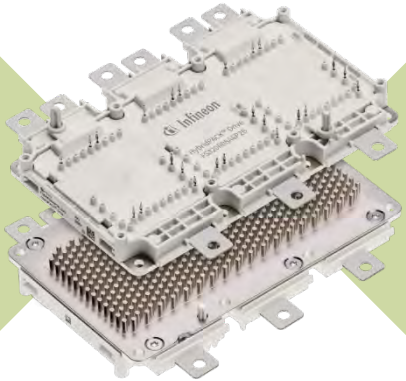

Highest flexibly and scalability:

- Blocking voltages of 750V and 1200V
- Performance variations for inverter designs between 100 kW and 180 kW* through material stacks with different base plates

Key product benefits:

Scalability

→ Lower development costs through reuse of mechanical and electrical inverter design

Quality excellence

→ State of the art Infineon quality proven in volume ramps

Best in class EDT2 chipset regarding performance and efficiency

→ Higher efficiency increase the driving range of battery electric vehicles

Press-fit for reduced mounting time of signal pins

→ Reduced total costs

* Inverter power depends on individual system design of our customers

Copyright © Infineon Technologies AG 2020. All rights reserved.

HybridPACK™ DC6i – FS650R08A4P2
Upgrade path to HP1 and DC6 families up to 100kW*

Infineon's EDT2 IGBT technology:

- Benchmark efficiency and ruggedness
- Blocking voltage 750V
- Ic nom: 650A
- Tvj op = 150°C
- Short-time extended Operation Temperature Tvj op = 175°C

- Full qualification acc. to AQG324 guideline
- In production

HybridPACK™ DC6i:

- Combines latest technologies available offering an upgrade path to the HP1 and DC6 families
- For inverters up to 100 kW

Key product benefits:

Direct cooling	25% smaller size than HybridPACK™ Drive	Benchmark current density combined with short circuit ruggedness and increased blocking voltage	Press-fit for reduced mounting time of signal pins
→ Improved heat dissipation through ribbon bond structure	→ Enables very compact & light inverters	→ Highest reliability	→ Reduced total costs

* Inverter power depends on individual system design of our customers

Copyright © Infineon Technologies AG 2020. All rights reserved.

Infineon's HybridPACK™ DSC S2 – FF450R08A03P2
Benchmark IGBT technology meets compact package

Infineon's EDT2 IGBT technology:

- Excellent light load power losses for superior efficiency
- 750V blocking voltage

Infineon's Double Sided Cooling package:

- Very compact & lightweight mold package
- 175°C short-term chip junction temperature capable for increased power density

- Full qualification acc. to AQG324 guideline
- In production

Key product benefits:

Flexible half-bridge module	High power density	Built-in current and temperature sensors	Low parasitic stray inductance and 750V blocking voltage
→ enables different inverter geometries and further motor integration	→ enables very compact & light inverters	→ efficient and safe inverter	→ improved system efficiency

Copyright © Infineon Technologies AG 2020. All rights reserved.

Automotive CoolSiC™ MOSFET 1200 V HybridPACK™ Drive Released portfolio

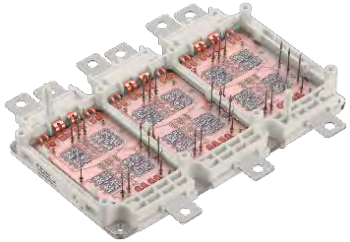

On-resist. R_{DS_on} [mOhm]	Voltage [V]	Ic [A]	Product	Package
2.75	1200V	400A	FS03MR12A6MA1B	HybridPACK ™ Drive
5.7	1200V	200A	FS05MR12A6MA1B	HybridPACK ™ Drive

Copyright © Infineon Technologies AG 2020. All rights reserved.

Infineon HybridKITs give you a headstart in the inverter design phase

Key benefits

- Available for almost all power modules
- Design reference for new inverter designs
- Fast lab evaluation of the capabilities of our power modules
- Speeds up the R&D process
- Saves R&D effort

HybridKIT Drive

HybridKIT DSC

HybridKIT 1+

HybridKIT Drive Sense

EasyKIT DC-DC

Orderable online:

hitex EMBEDDED TOOLS & SOLUTIONS

Hitex Online Shop

Infineon

ISaR Tool

Copyright © Infineon Technologies AG 2020. All rights reserved.

Sense & Control & Supply

Infineon's virtual show 2020

Infineon offers key components for traction motor inverters translating into strong system understanding

Microcontrollers	IFX product offering
› AURIX™	› Multi-core device › Safety & security › Scalable across xEV

Power Supply	IFX product offering
› OPTIREG™ PMIC	› Functional safety › Standby-mode › Improved EMC behavior

Gate Driver	IFX product offering
› EiceDRIVER™	› Increase system efficiency and lifetime › Reduce system cost

Power Module	IFX product offering
› HybridPACK™ Drive	› Broad family › Leading IGBT tech › High volume experience

Current sensors	IFX product offering
› XENSIV™	› AC current measurement › ADC interface › Standalone sensor

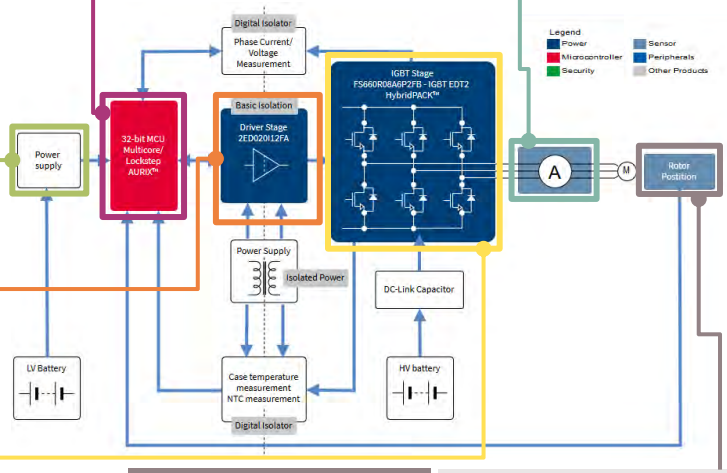

Position sensors	IFX product offering
› XENSIV™	› Integrated end-of-shaft rotor position sensing solution › More compact design

Copyright © Infineon Technologies AG 2020. All rights reserved.

AURIX ™ serves inverter requirements very well and customers can use it across multiple applications

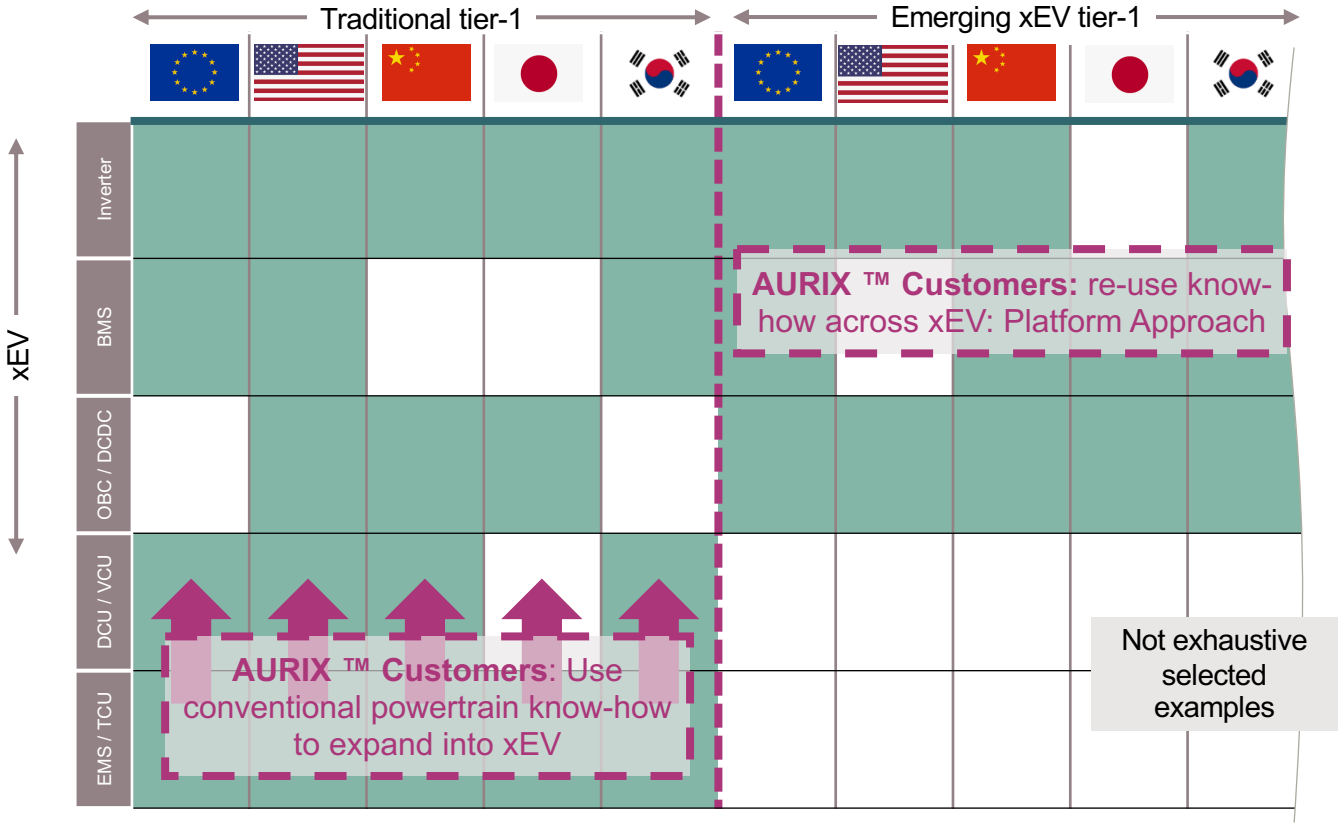

Copyright © Infineon Technologies AG 2020. All rights reserved.

All traction motor inverter topologies are addressed by AURIX™ - the MCU market leader

AURIX™ addresses all traction motor inverter topologies

48V Mild Hybrid

P2

P0 BSG

AURIX™ #1: Market leader

Full Hybrid & PHEV

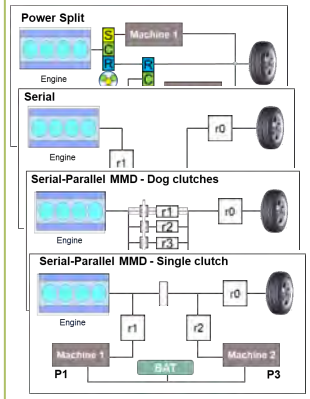

Power Split, Serial & Serial-Parallel

AURIX™ #2: Growing strongly

BEV & FCEV

Front eAxle

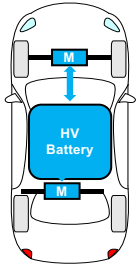

Rear eAxle

AURIX™ will be #1: in next 3-5 years

Why AURIX™?

#1

30-40% inverter market share by 2025

- **Strong position at EU & US OEMs** who increase their inverter competence
- **Scalable family concept** enables re-use across different inverter types
- **Strong product roadmap** provides access to innovation
- **Proven quality & powertrain knowhow** from conventional applications

Copyright © Infineon Technologies AG 2020. All rights reserved.

Our new generation AURIX™ TC3x provides the right features to solve challenges for traction motor inverter

Challenges in Inverter	Increase Efficiency	Functional Safety	Security Requirements	Cost Reduction	Performance Increase
AURIX™ TC3xx features solve challenges	Support high PWM (5ns @ 200MHz)	Implementation of safety measures in HW (LBIST)	EVITA FULL	Replacement of resolver IC	50% clock rate increase; multi-core enables parallel development
	Sufficient performance for complex observers (e.g. Kalman)	ISO26262 Certified from TÜV	Symmetric & asymmetric crypto accelerators	3 core (2 lockstep) device at 6 MB (in TC2x only with 8 MB)	Enables anti oscillation functions

Copyright © Infineon Technologies AG 2020. All rights reserved.

AURIX™ TC3xx: the scalable portfolio of choice for control and safety computing in xEV

xEV
Growing to >30% in xEV

	TQFP 80	TQFP 100	T/LQFP 144	BGA 180	LQFP 176	LFBGA 292	LFBGA 516
9x Series 6 x 300MHz - 16 MB						TC397X	TC399X
Ex Series 4 x 300MHz - 12 MB						TC3E7Q	
8x Series 4 x 300MHz - 10MB						TC387Q	TC389Q
7x Series 3 x 300MHz - 6MB					TC375T	TC377T	
6x Series 2 x 300MHz - 4MB			TC364D	TC366D	TC365D	TC367D	
3x Series 1 x 160MHz* - 2 MB	TC332L	TC333L	TC334L	TC336L		TC337L	
2x Series 1 x 160MHz* - 1 MB							

*Upto 300MHz option

● Main Traction Inverter

● 48V Mild Hybrid Inverter

L - Single Lockstep Core
D - Dual Core
T - Triple Core
Q - Quadruple Core
X - Sextuple Core

Key AURIX™ TC3xx feature by application	Inverter
High Multicore. Perf.	✓
Rich peripheral set	✓
CAN-FD (up to x20)	
Gb Ethernet (up to x2)	
High RAM content	
Timer across family	✓
Low power modes	
Safety (ASIL-D)	✓
Security	✓
Resolver-less sol.	✓
SOTA support	✓
High temp. support	✓
High RAM/flash ratio	✓

Copyright © Infineon Technologies AG 2020. All rights reserved.

AURIX™ microcontroller & OPTIREG™ PMIC teaming up for Functional Safety

Copyright © Infineon Technologies AG 2020. All rights reserved.

Automotive system

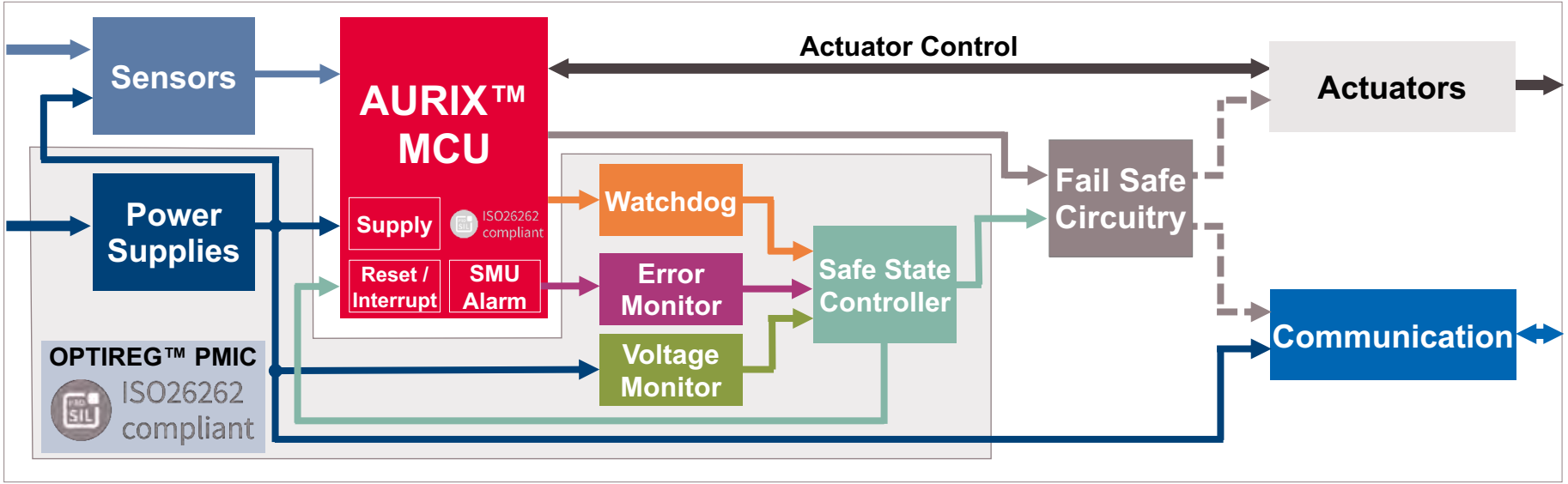

Safety MCU:
System level hardware requirements

Safety path activated by microcontroller as main decision maker

Secondary safety path for faults that may lead to an unreliable MCU

Copyright © Infineon Technologies AG 2020. All rights reserved.

OPTIREG™ FuSa-PMIC
Genesis of Safety Requirements

ISO26262 compliant

- OPTIREG™ FuSa-PMICs have been defined based on AURIX™ requirements for external monitoring
- Those requirements have then been extended to support also other MCUs
  - Choice between different types of flexible watchdogs (Window- & Functional-Watchdogs)
  - Ability to monitor MCU core supply
- OPTIREG™ FuSa-PMICs are developed as Safety Element out of Context (SEooC) supporting ASIL-D acc. ISO26262

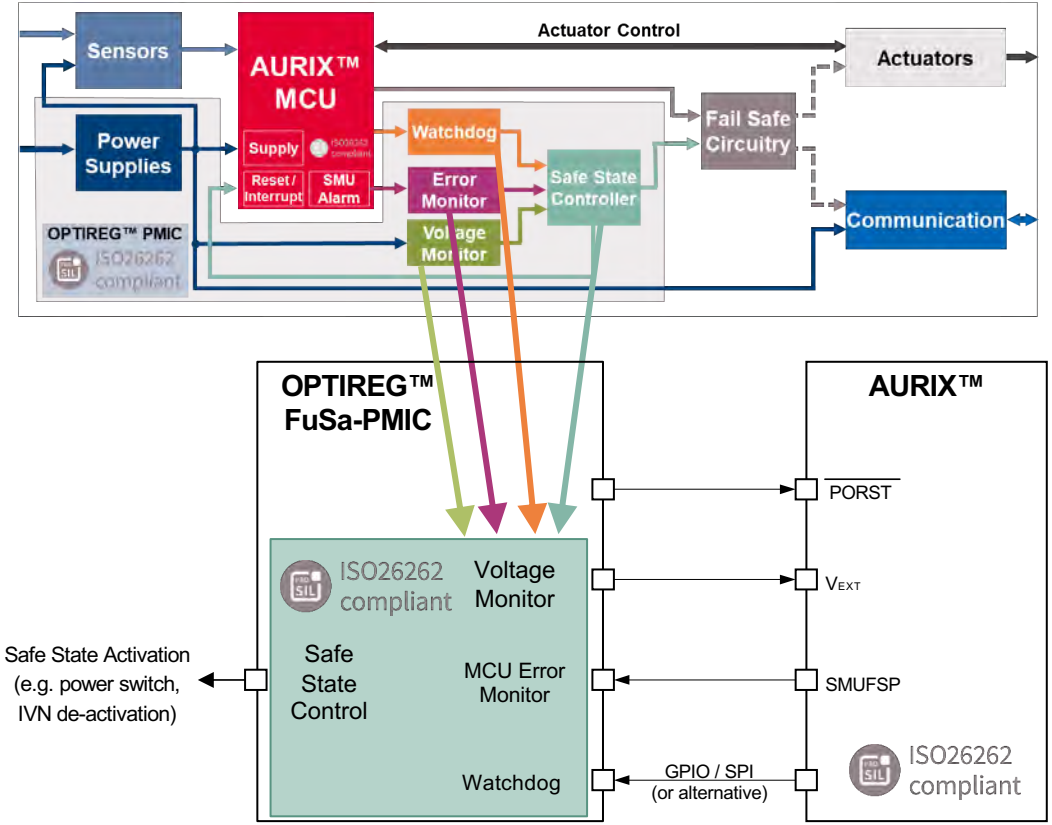

Copyright © Infineon Technologies AG 2020. All rights reserved.

TLF35584 / TLF35585 (in development)
OPTIREG™ Functional Safety PMIC

Key Features

- Buck/Boost-Pre-Regulator
  - IQ = 1.3A (1.5A for TLF35585); f: 300kHz-2.5MHz
- µC-Supply: 3.3V/5V @ 600mA
- Reference-LDO: 5V @ 150mA (±1%)
- Communication-Supply: 5V @ 200mA
- 2x Tracker: 5V @ 150mA
- StandBy-LDO: 3.3V/5V @ 10mA

- EN/Wake (T15 and CAN/FlexRay)
- SPI
- TLF35585 enhancement vs. TLF35584
  - E.g. features: additional diagnostics information, extended timer functionality
  - Ultra low current consumption (<10-15µA)
- Safety Features
  - Multiple bandgap (supply vs V-monitoring)
  - UV/OV-Monitoring, ERR-Monitoring
  - Functional-WD & Window-WD
  - Safe State Control / Secondary Safety Path
  - Protected safety area
  - Built In Self Test
  - Development acc. ISO26262

ISO26262 compliant

Block Diagram

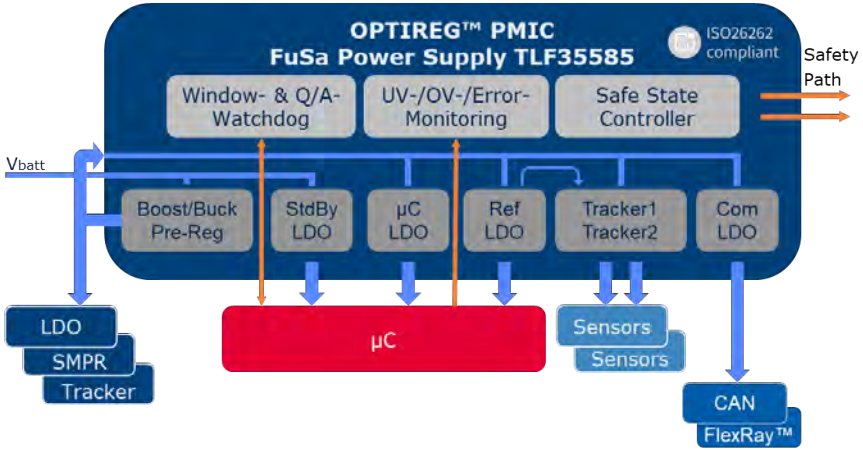

Package

AEC Qualified

RoHS

PG-VQFN-48 (TLF35584 & TLF35585)

PG-TQFP-48 (TLF35585)

PG-LQFP-64 (TLF35584)

Copyright © Infineon Technologies AG 2020. All rights reserved.

EiceDRIVER™ Enhanced: continuing the Success Story of Infineon Automotive Gate Drivers

2009 **2015** **2021**

Meeting the key success factors as the market develops

1st Generation

Robust product available in automotive quality

2nd Generation

Supporting system optimization & flexibility

3rd Generation

Maximizing system performance/cost ratio
Functional Safety
Driving IGBT & SiC

EiceDRIVER™ Enhanced launching in **Q1 2021**!

- Pin-compatible product variants for IGBT & SiC switches
- Easy to use, no programming
- Integrated booster stage
- Advanced safety features
- Accurate Delta-Sigma ADC
- Suiting various HV xEV applications:

Infineon EiceDRIVER™ for automotive main inverter applications are in **volume production** since **2009**. Used in many automotive **(PH)EV** platforms **worldwide**. **Coreless transformer** galvanic isolation technology is **mature** and **certified**.

Copyright © Infineon Technologies AG 2020. All rights reserved.

Sensors for Main Inverter

Position Sensor
Resolver replacement

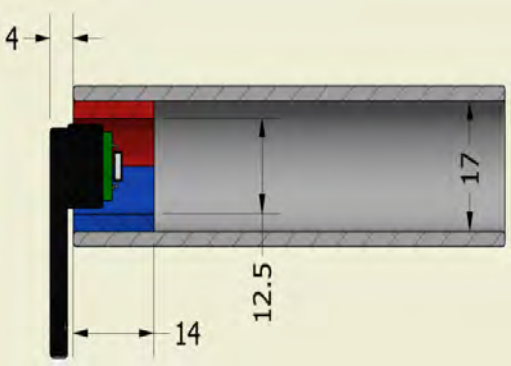

- Very good system performance
- Sensor module
- Signed with magnetic circuit
- Small construction space
- High robustness & reliability
- Small construction space
- ASIL-D implementation

Current Sensor
Integrated on the Power Module

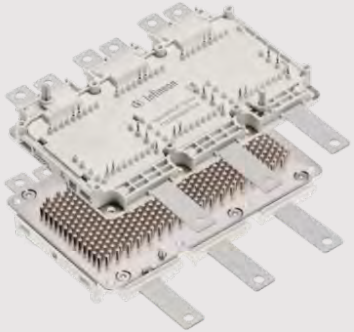

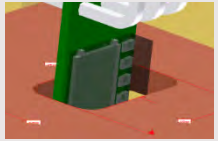

- Device name: TLE4972
- Current 400+ A
- eCR Vertical mounting
- Package: SON
- Massive Copper Bus-bar
- External isolation

Copyright © Infineon Technologies AG 2020. All rights reserved.

TLE5309D Analog Angle sensor with iEoS(Integrated End of Shaft *) –Targets Resolver replacement to reduce system cost

TLE5309D in iEoS

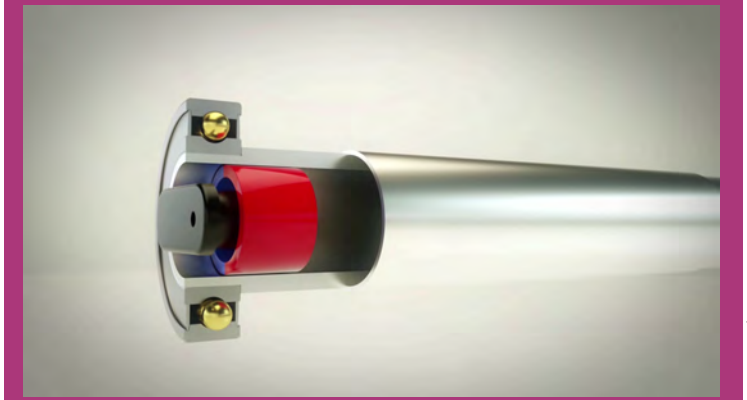

- SYSTEM COST REDUCTION – No Excitation generator & carrier filter required
- DIVERSE SENSING TECHNOLOGY (AMR & GMR)
- FUNCTIONAL SAFETY – ASIL-D Ready
- HIGH ACCURACY & HIGH SPEED
- REDUCED CONSTRUCTION SPACE -with iEoS
- TDSO Pkg. Grade 1 today ,Grade 0 in 2022˚

TLE5309D together with Infineon iEoS system solution reduces system cost & provides Stray field immunity

* Infineon IP , Available for Licensing

Copyright © Infineon Technologies AG 2020. All rights reserved.

New! IFX Hybrid Kit
Fast track your Main Inverter development

Updated TC3xx Logic Board Design

+

Hybrid-Kit DSC

+

Hybrid-Kit Drive Sense

Get started quickly with IFX for inverter applications!

New! Hybrid Kit Includes

- **IFX products** such as power modules, gate drivers, current and position sensors to develop inverter systems
- **Hardware** Optimized logic board for testing different Hybrid-Kits for inverter applications
- **Software** to start development of inverter for 3-phase motors

Logic Board Enhancements compared to AURIX™ TC2xx Hybrid Kit

- Improved interface placements on logic board for compact design
- Improved programming and debugging via on board USB miniWiggler
- New AURIX™ TC387 features include resolver signal acquisition through DS-ADC, GTM with MCS and DTM, safety & security measures, 4 core + 2 lockstep architecture, increased CPU performance enabling complex observer
- Board layout also supports 6-phase motors

TC387 Hybrid Kit Logic Board $950
Available for order through ISAR
Search for: HYBRID KIT LOGIC B A2G(SP005353774)

Copyright © Infineon Technologies AG 2020. All rights reserved.

Infineon offers full system solutions addressing all xEV segments: pure EV and all types of hybrid EVs

Infineon offers full portfolio for the control loop of an electric car

rotor position sensor

current sensor

...and more

Sensors

AURIX™

Microcontrollers

high-voltage EiceDRIVER™

driver ICs

Drivers

bare-die

discretes

modules

SiC and IGBT

for high-voltage battery electric vehicles, plug-in and full hybrids

bare-die

discretes

chip embedding

MOSFETs

for 48 V mild hybrids

Power semis

Power supply and communication

OPTIREG™

board network transceivers

Copyright © Infineon Technologies AG 2020. All rights reserved.

making eMobility work

More information required?

https://www.infineon.com/emobility

Copyright © Infineon Technologies AG 2020. All rights reserved.

Part of your life. Part of tomorrow.