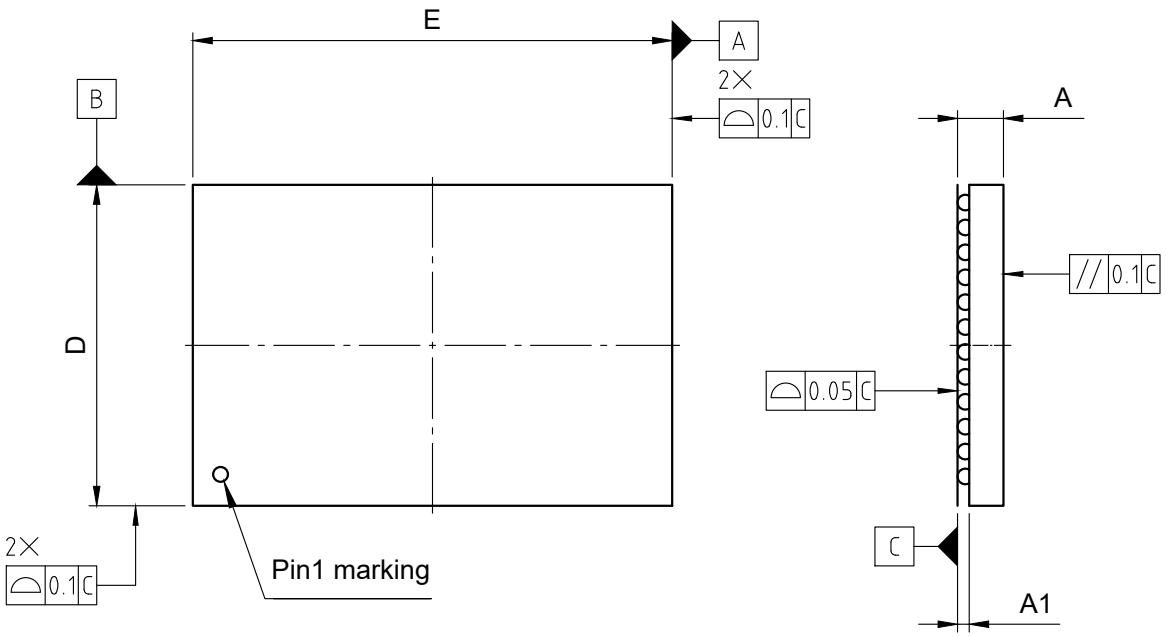

Bottom view

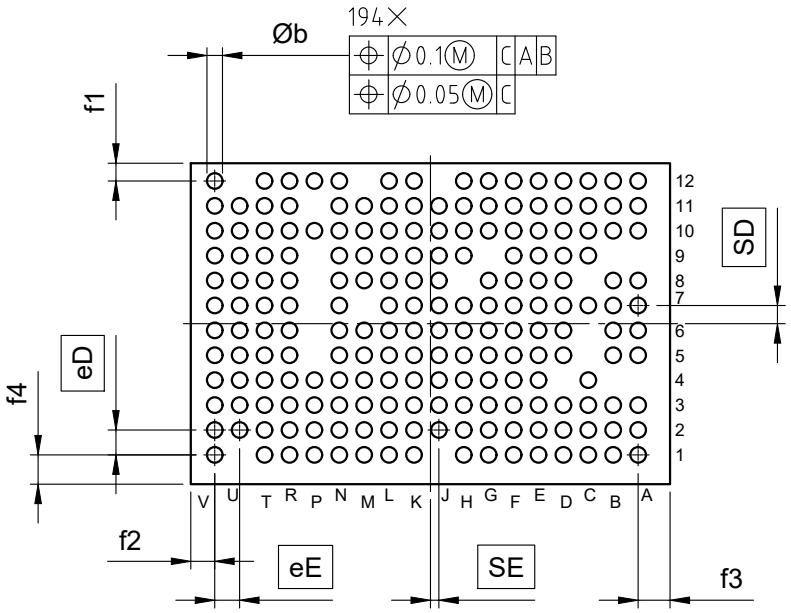

SYMBOL	DIMENSIONS		
	MIN.	NOM.	MAX.
A	0.45	0.5	0.55
A1	0.16	0.19	0.22
D	5.115	5.155	5.195
E	7.658	7.698	7.738
Øb	0.2	0.25	0.3
eD	0.4 BSC		
eE	0.4 BSC		
SD	0.292 BSC		
SE	0.135 BSC		
f1	0.285 BSC		
f2	0.384 BSC		
f3	0.514 BSC		
f4	0.47 BSC		

All dimensions are in units mm
The drawing is in compliance with ISO 128-30, Projection Method 1 [ ]