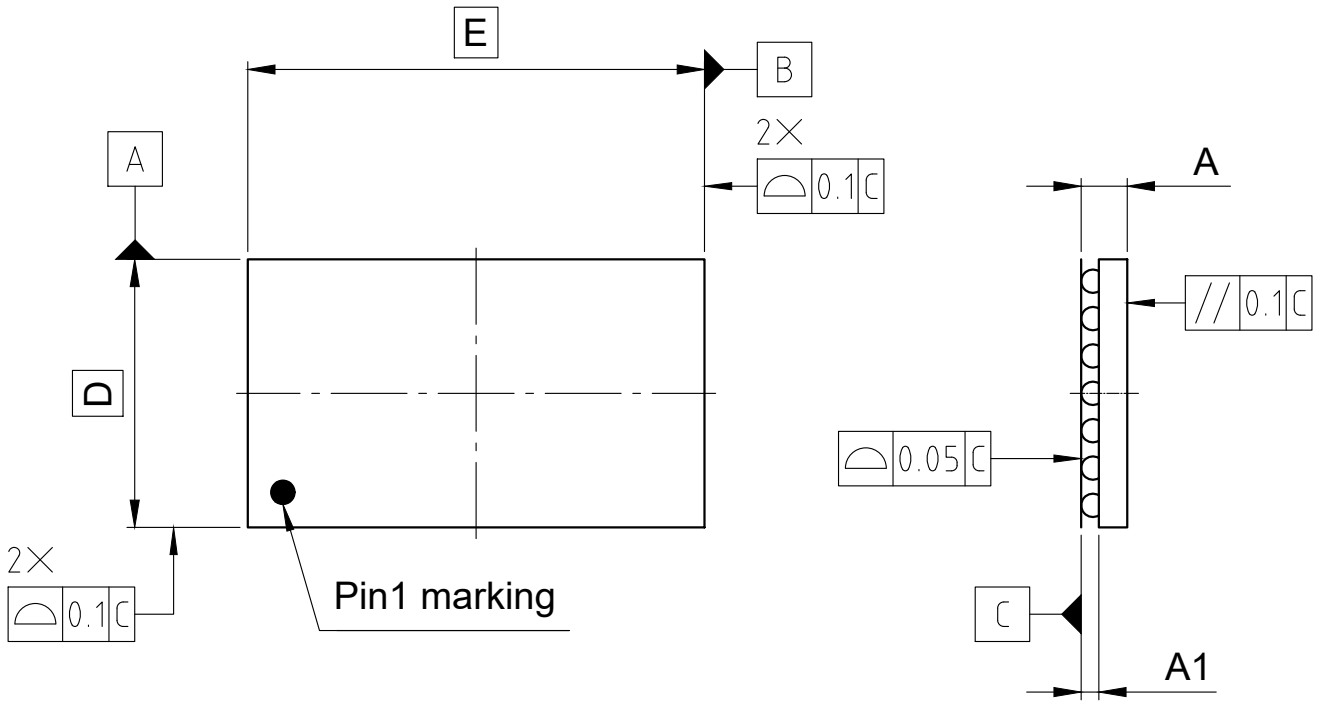

Bottom view

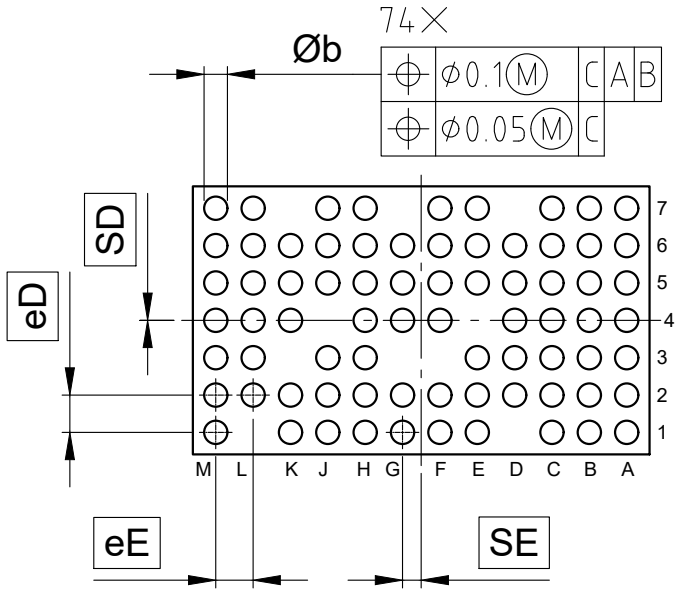

SYMBOL	DIMENSIONS		
	MIN	NOM	MAX
A	-	-	0.55
A1	0.16	-	-
D	2.87 BSC		
E	4.87 BSC		
Øb	0.2	0.25	0.3
eD	0.4 BSC		
eE	0.4 BSC		
SD	0 BSC		
SE	0.2 BSC		

All dimensions are in units mm

The drawing is in compliance with ISO 128-30, Projection Method 1 [ ]