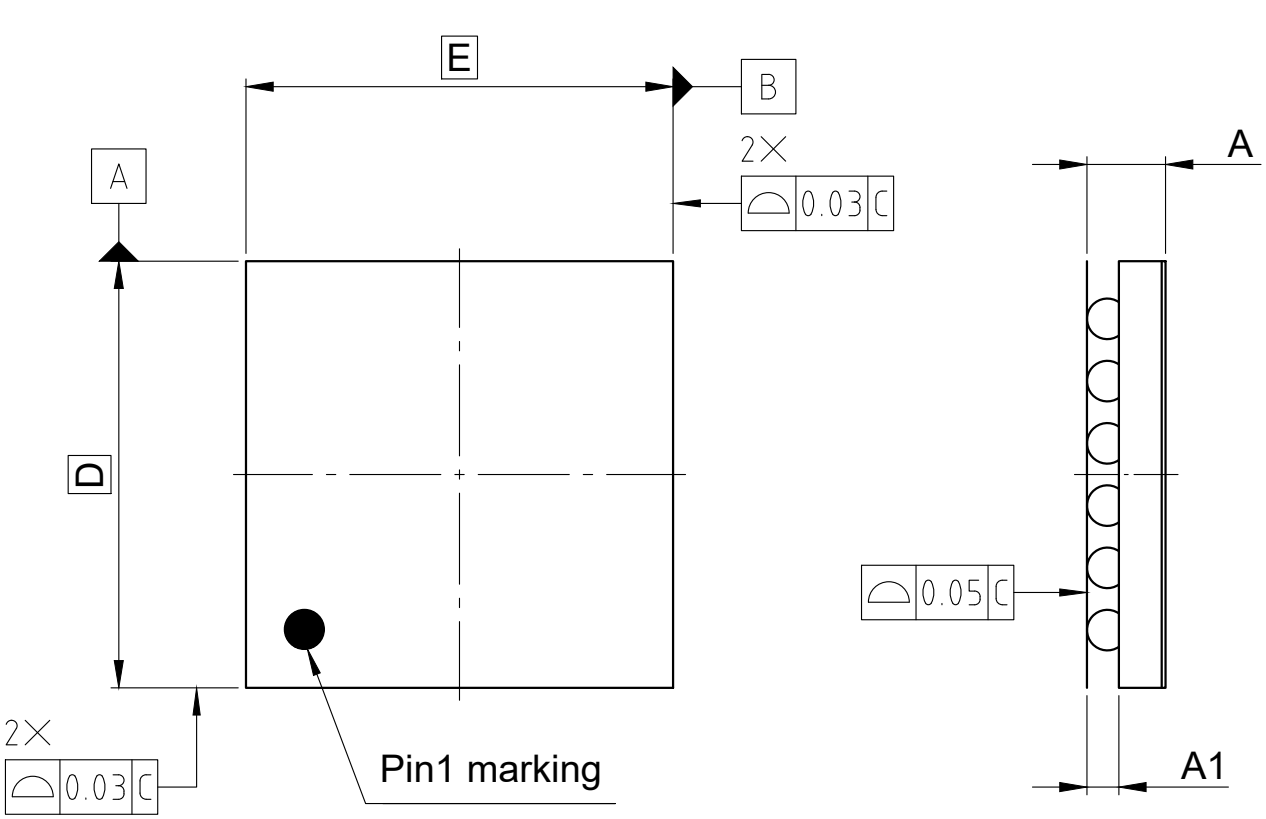

Bottom view

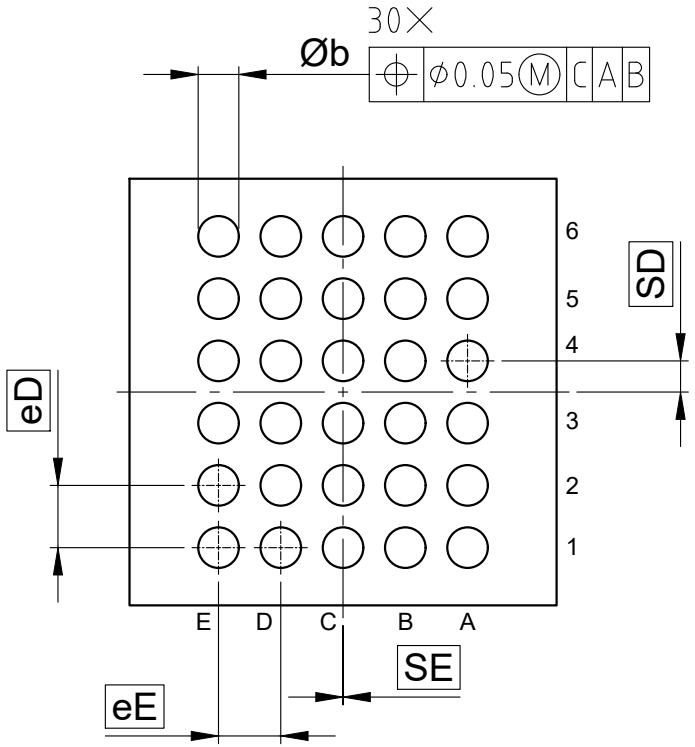

SYMBOL	DIMENSIONS		
	MIN	NOM	MAX
A	-	-	0.545
A1	0.175	-	0.235
D	2.741 BSC		
E	2.744 BSC		
Øb	0.231	0.261	0.291
eD	0.4 BSC		
eE	0.4 BSC		
SD/SE	0.2 / 0 BSC		

All dimensions are in units mm
The drawing is in compliance with ISO 128-30, Projection Method 1 [ ]
Dimensions and tolerances methods per ASME Y14.5-2009.