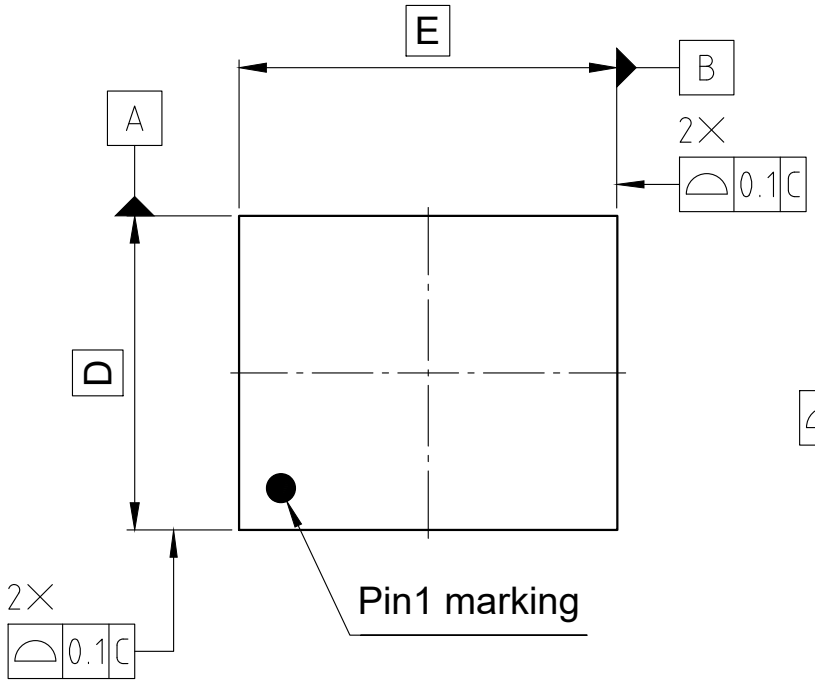

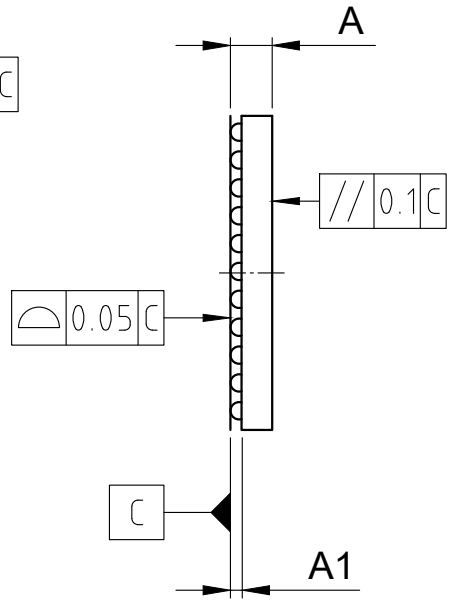

Bottom view

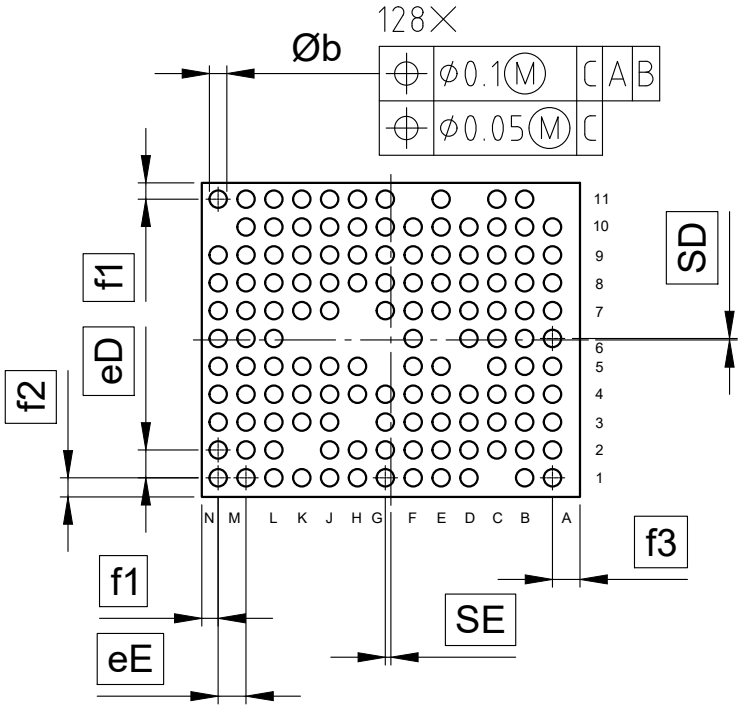

SYMBOL	DIMENSIONS		
	MIN	NOM	MAX
A	-	-	0.6
A1	0.16	-	-
D	4.51 BSC		
E	5.43 BSC		
Øb	0.2	0.25	0.3
eD	0.4 BSC		
eE	0.4 BSC		
SD	0.02 BSC		
SE	0.08 BSC		
f1	0.235 BSC		
f2	0.275 BSC		
f3	0.395 BSC		

All dimensions are in units mm

The drawing is in compliance with ISO 128-30, Projection Method 1 [ ]