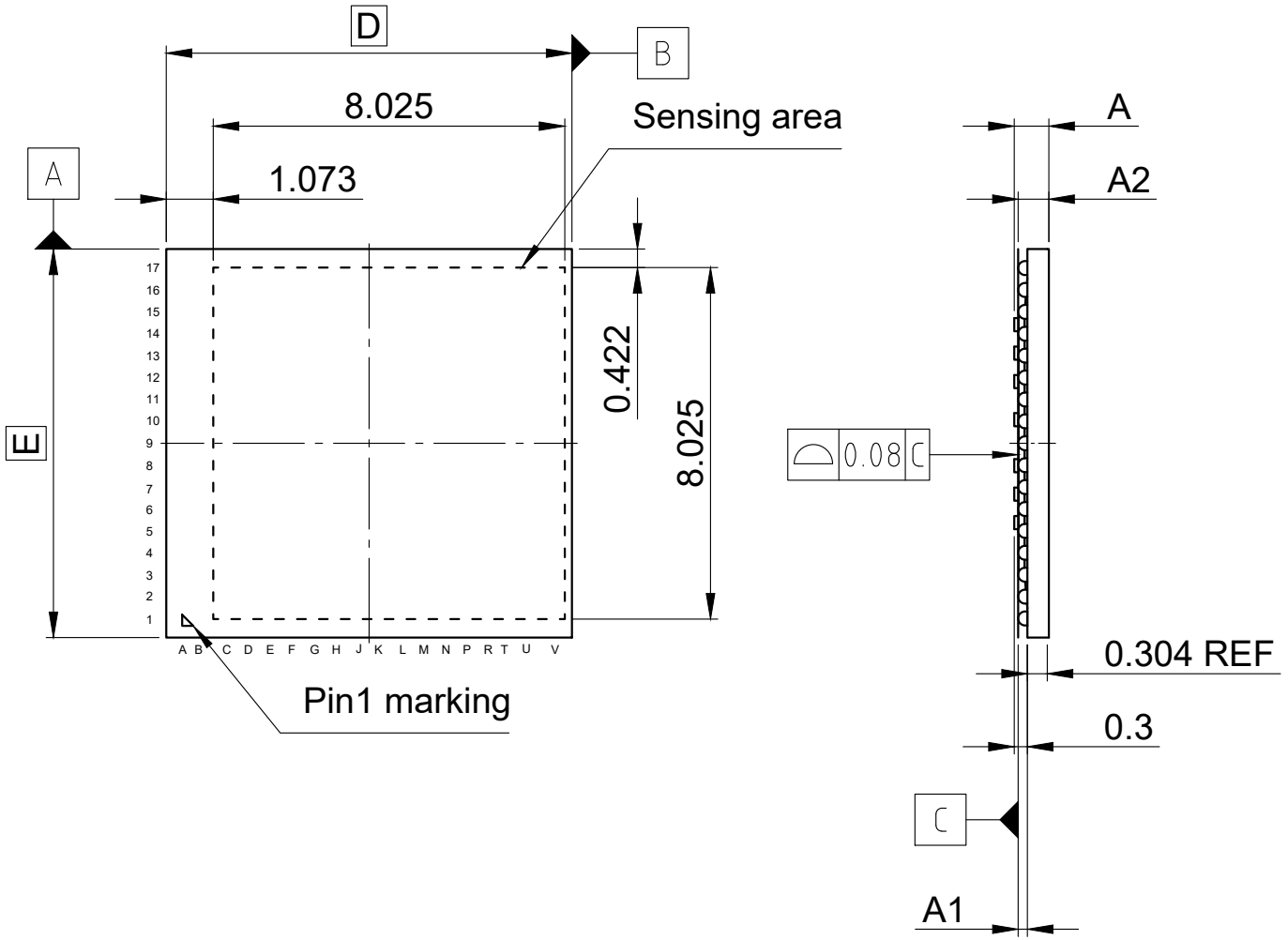

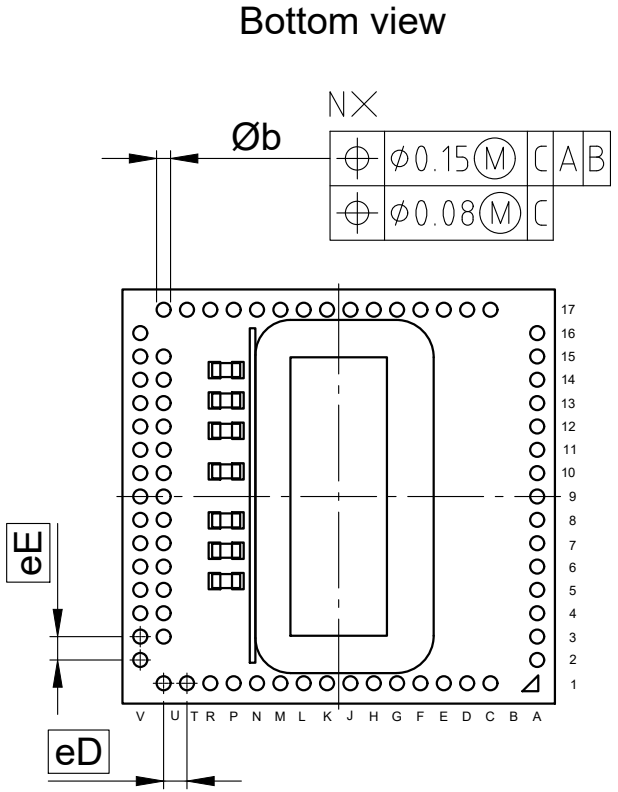

SYMBOL	DIMENSIONS		
	MIN.	NOM.	MAX.
A	-	-	0.7
A1	0.16	-	0.26
A2	0.414	0.514	0.614
D	9.26 BSC		
E	8.87 BSC		
Øb	0.27	-	0.37
eD	0.5 BSC		
eE	0.5 BSC		

All dimensions are in units mm

The drawing is in compliance with ISO 128-30, Projection Method 1 [ ]