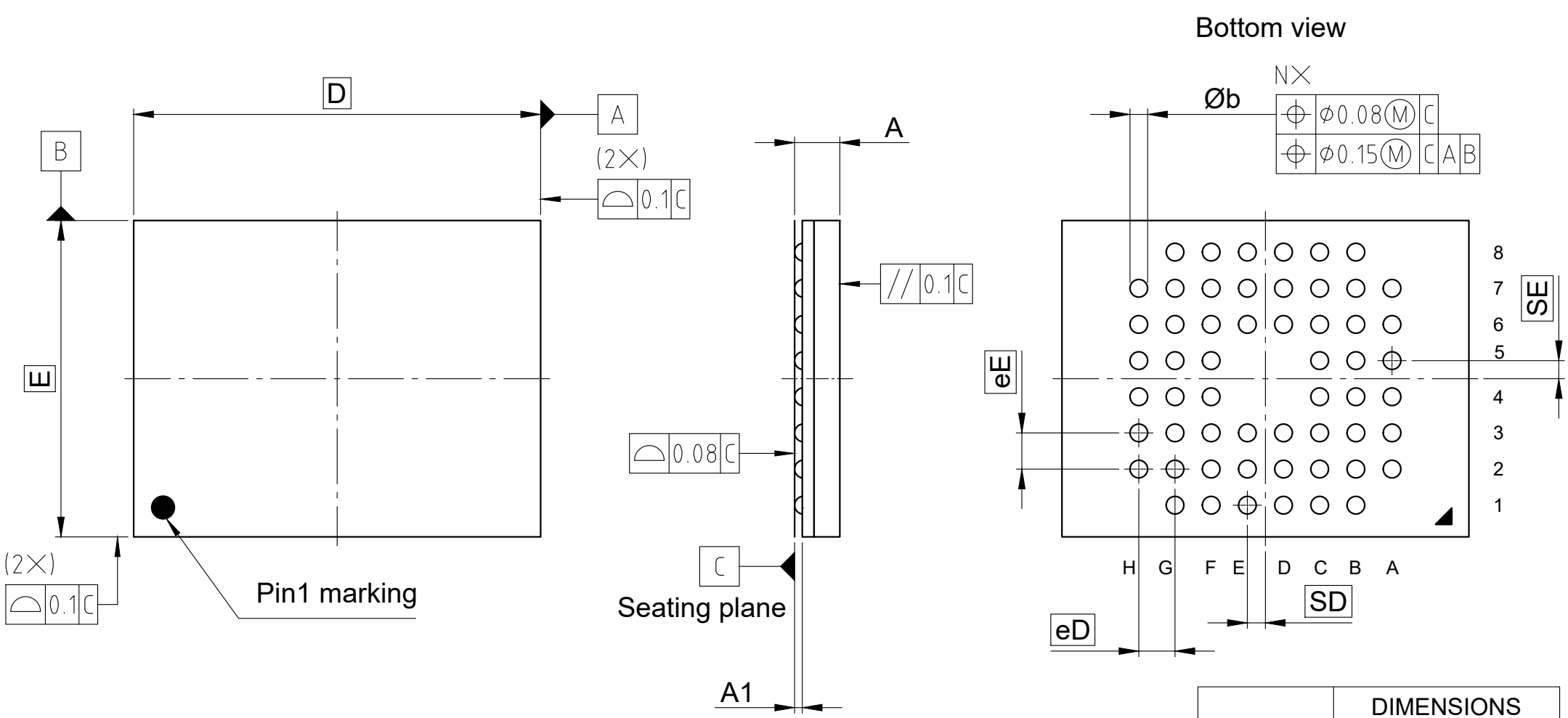

SYMBOL	DIMENSIONS		
	MIN.	NOM.	MAX.
A	-	-	1
A1	0.17	-	-
D	9 BSC.		
E	7 BSC.		
n	56		
Øb	0.33	-	0.45
eD/eE	0.8 BSC.		
SD/SE	0.4 BSC.		

All dimensions are in units mm
The drawing is in compliance with ISO 128-30, Projection Method 1 [ ]
Dimensioning and tolerancing per ASME Y14.5M-1994 .