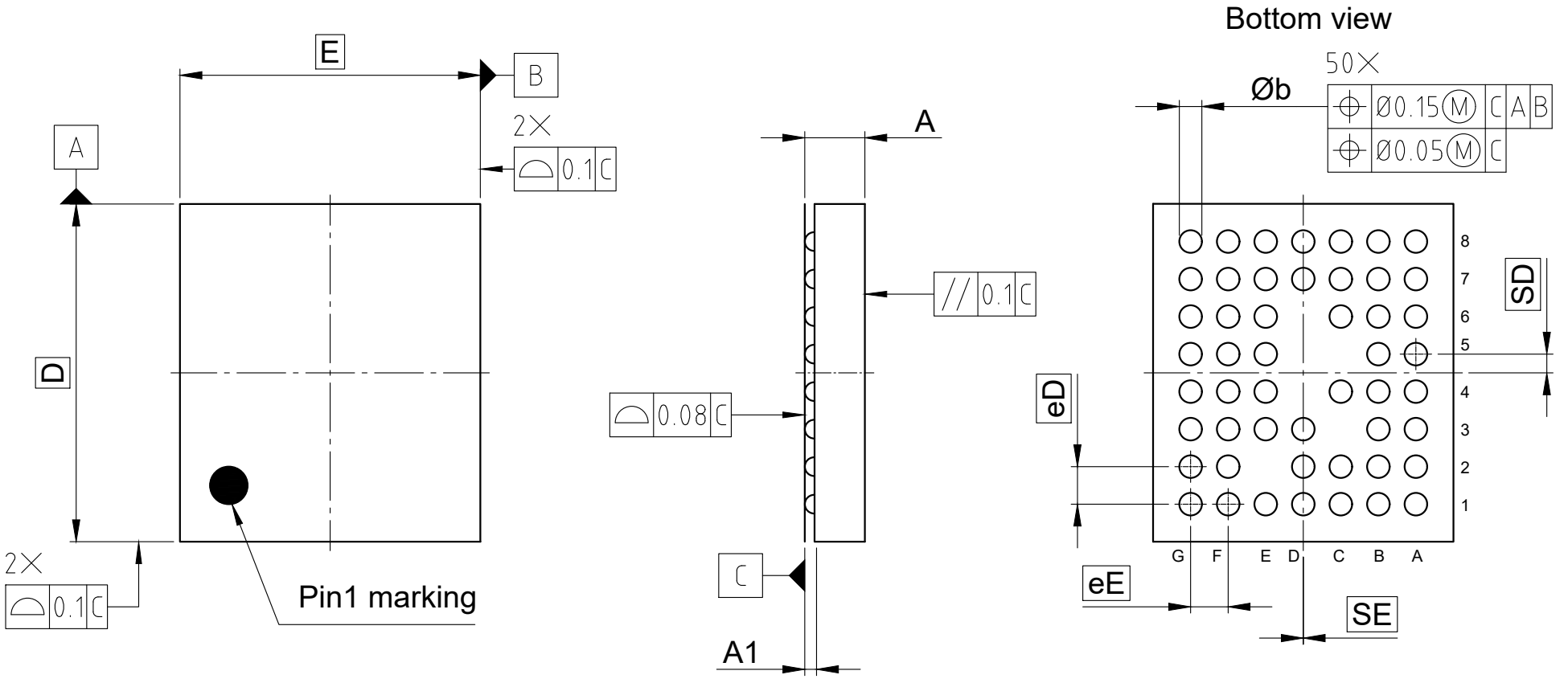

SYMBOL	DIMENSIONS		
	MIN	NOM	MAX
A	-	-	0.8
A1	0.13	-	-
D	4.5 BSC		
E	4 BSC		
Øb	0.2	0.25	0.3
eD	0.5 BSC		
eE	0.5 BSC		
SD	0.25 BSC		
SE	0 BSC		

All dimensions are in units mm

The drawing is in compliance with ISO 128-30, Projection Method 1 [ ]