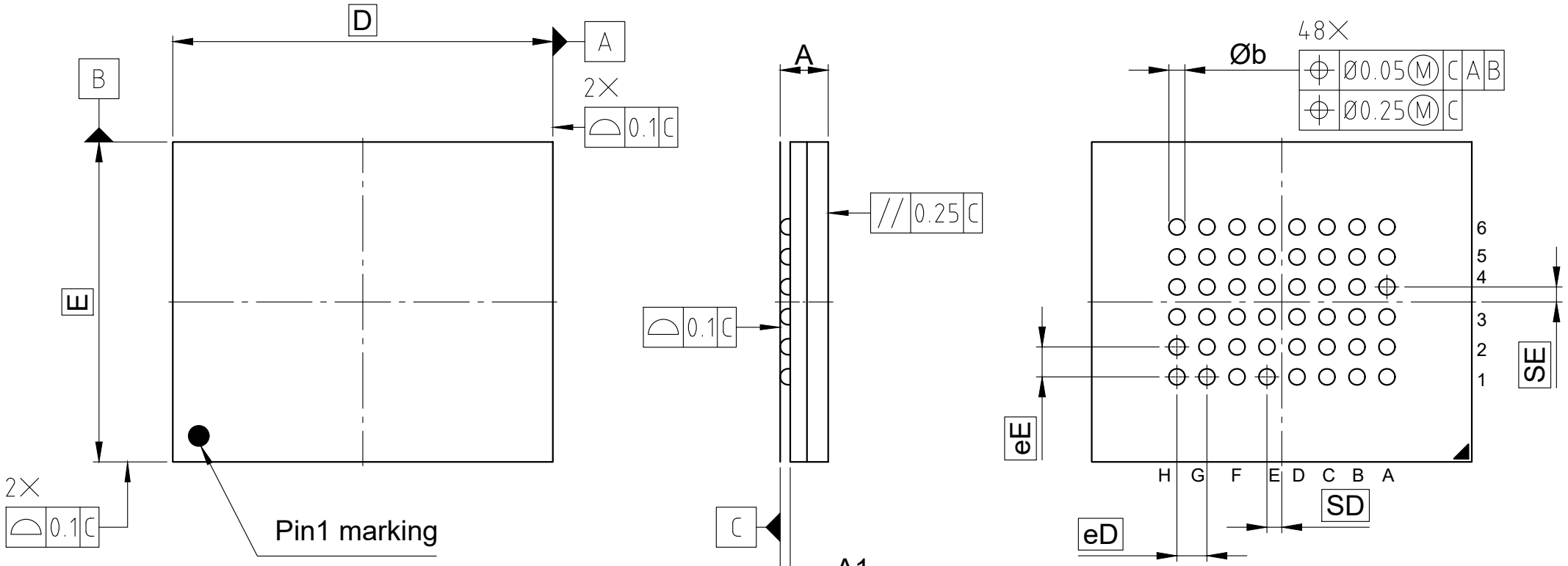

SYMBOL	DIMENSIONS		
	MIN.	NOM.	MAX.
A	-	-	1
A1	0.16	0.21	0.26
D	9.5 BSC		
E	8 BSC		
Øb	0.25	0.3	0.35
eD	0.75 BSC		
eE	0.75 BSC		
SD	0.38		
SE	0.38		

All dimensions are in units mm

The drawing is in compliance with ISO 128-30, Projection Method 1 [ ]