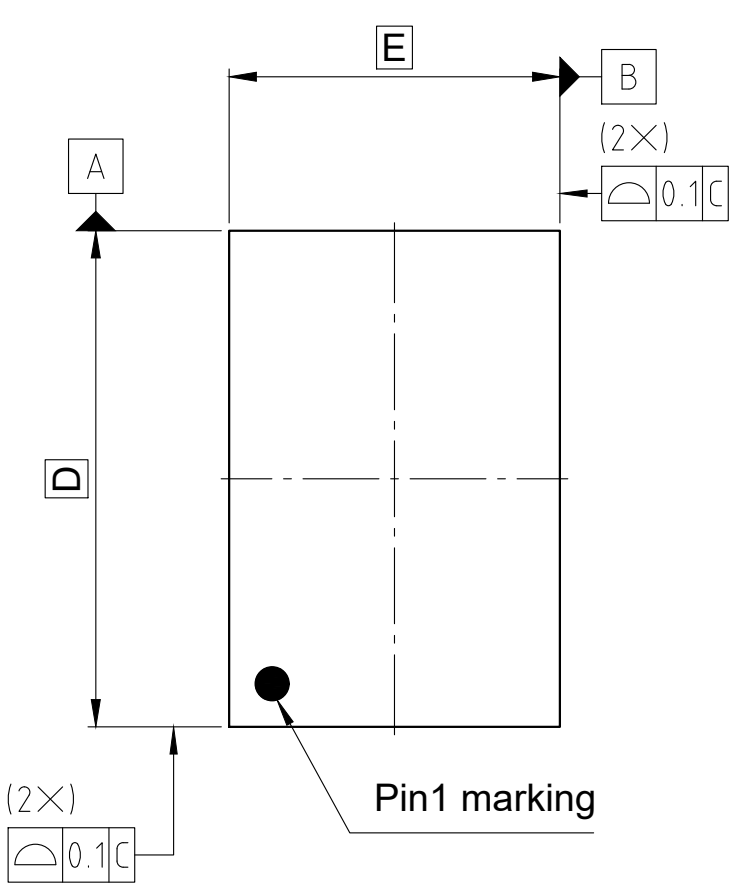

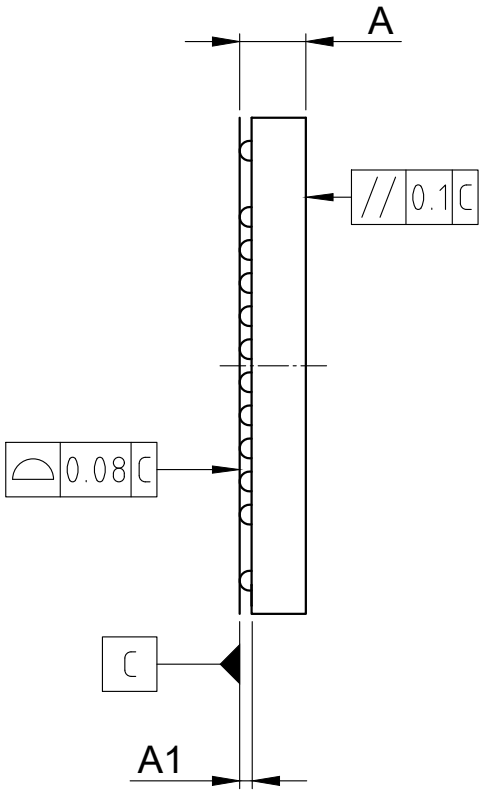

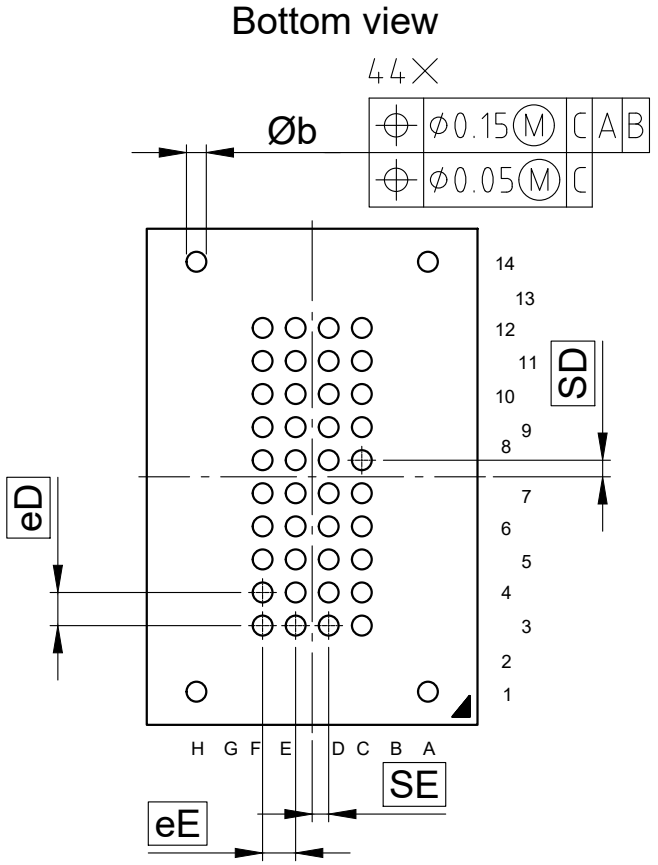

SYMBOL	DIMENSIONS		
	MIN.	NOM.	MAX.
A	-	-	1
A1	0.18	-	-
D	7.5 BSC		
E	5 BSC		
Øb	0.25	0.3	0.35
eD	0.5 BSC		
eE	0.5 BSC		
SD	0.25 BSC		
SE	0.25 BSC		

All dimensions are in units mm
The drawing is in compliance with ISO 128-30, Projection Method 1 [ ]
Dimensioning and tolerancing methods per ASME Y14.5M-1994.