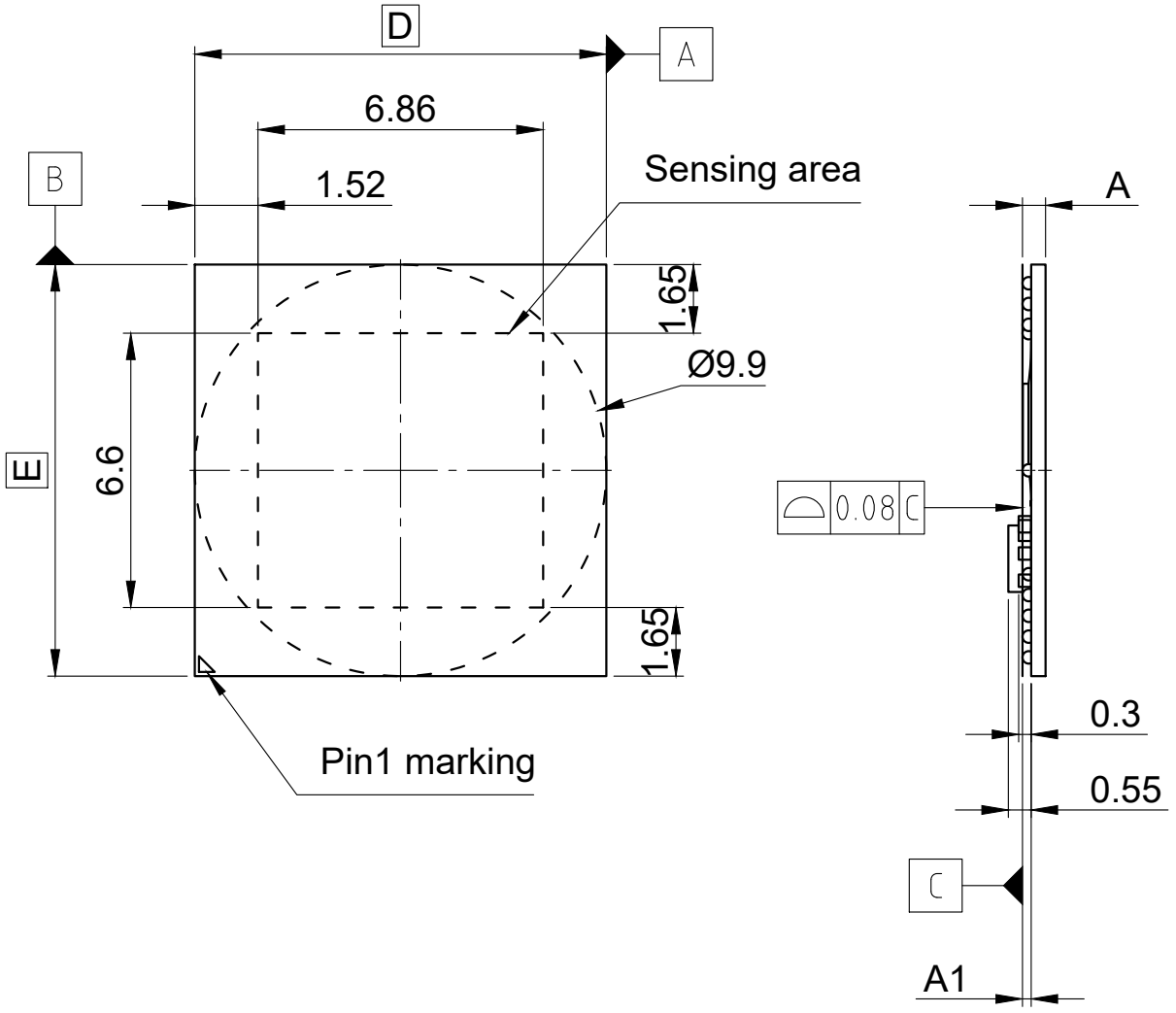

Bottom view

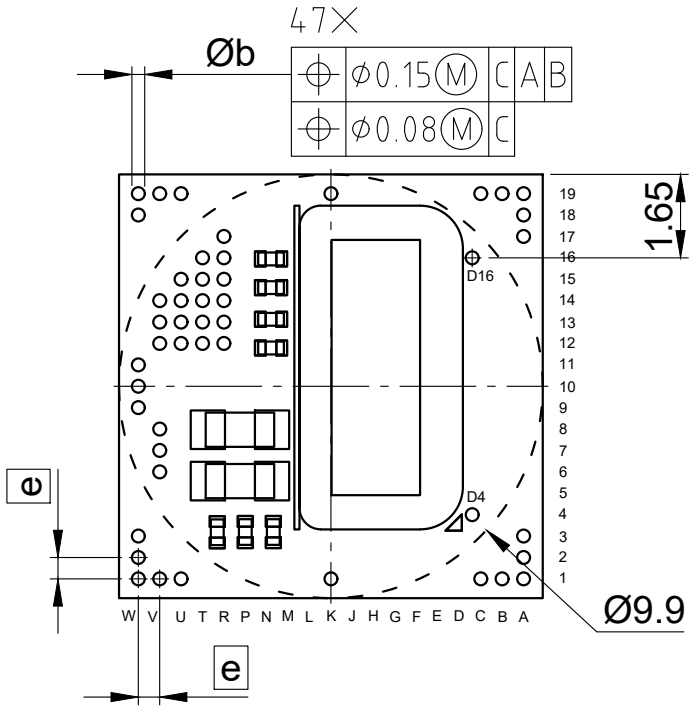

SYMBOL	DIMENSIONS		
	MIN.	NOM.	MAX.
A	-	-	1
A1	0.16	-	0.26
D	9.9 BSC		
E	9.9 BSC		
Øb	0.27	-	0.37
e	0.5 BSC		

All dimensions are in units mm

The drawing is in compliance with ISO 128-30, Projection Method 1 [ ]