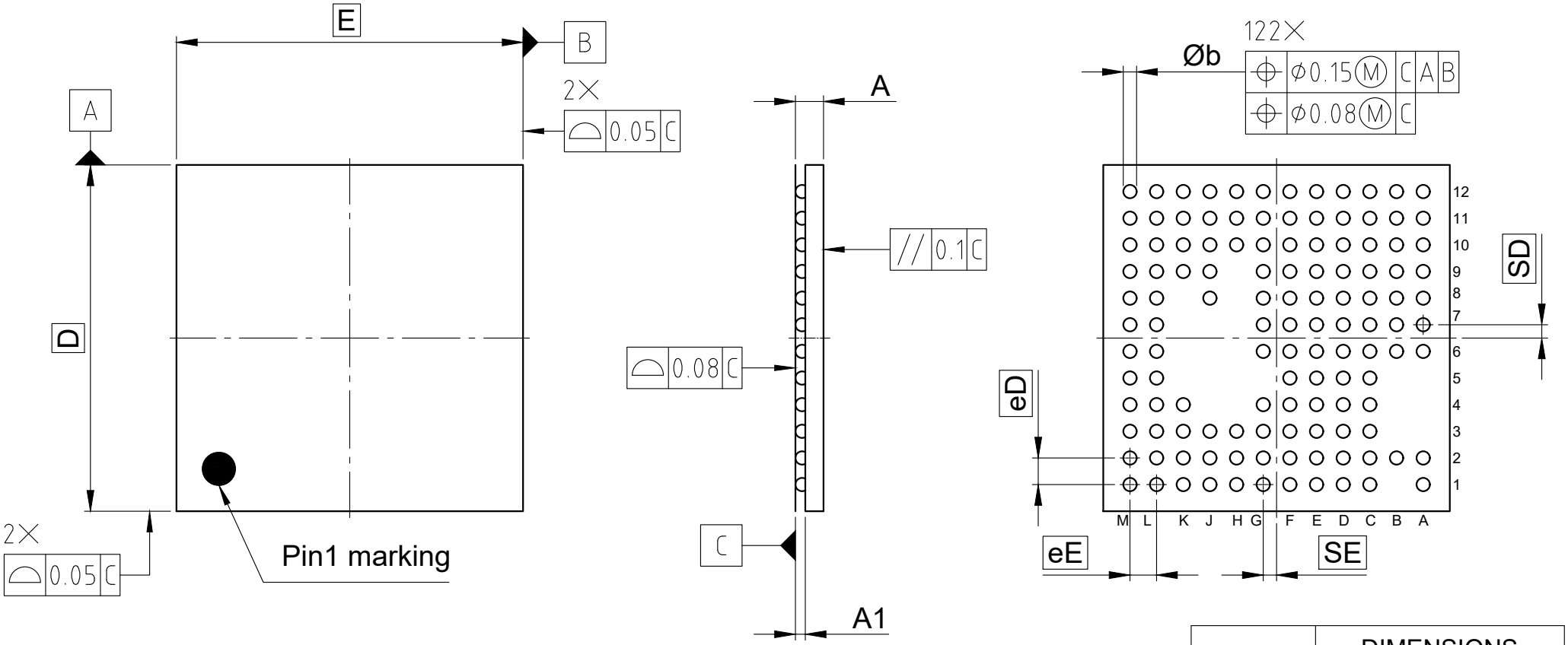

SYMBOL	DIMENSIONS		
	MIN	NOM	MAX
A	-	-	0.934
A1	0.11	-	-
D	6.5 BSC		
E	6.5 BSC		
Øb	0.2	0.25	0.3
eD	0.5 BSC		
eE	0.5 BSC		
SD	0.25 BSC		
SE	0.25 BSC		

All dimensions are in units mm

The drawing is in compliance with ISO 128-30, Projection Method 1 [ ]