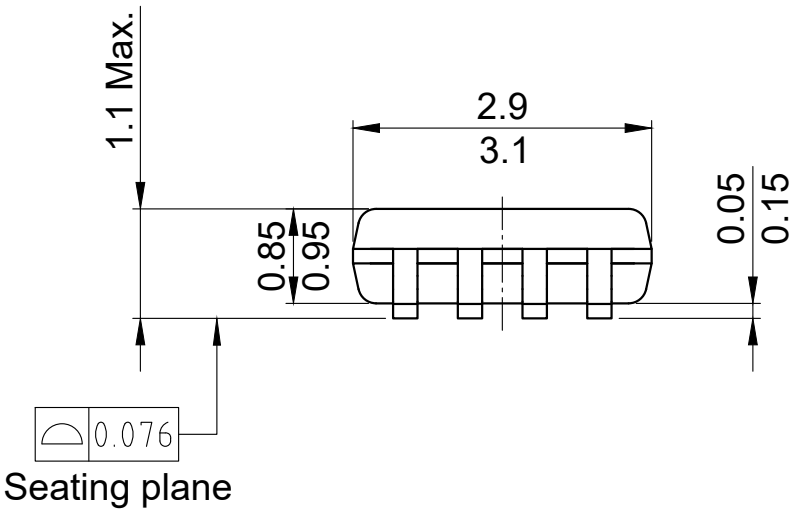

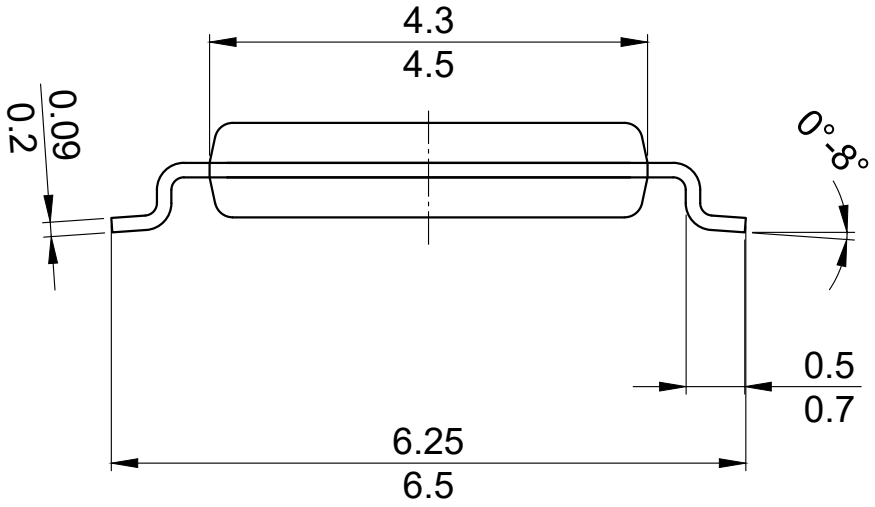

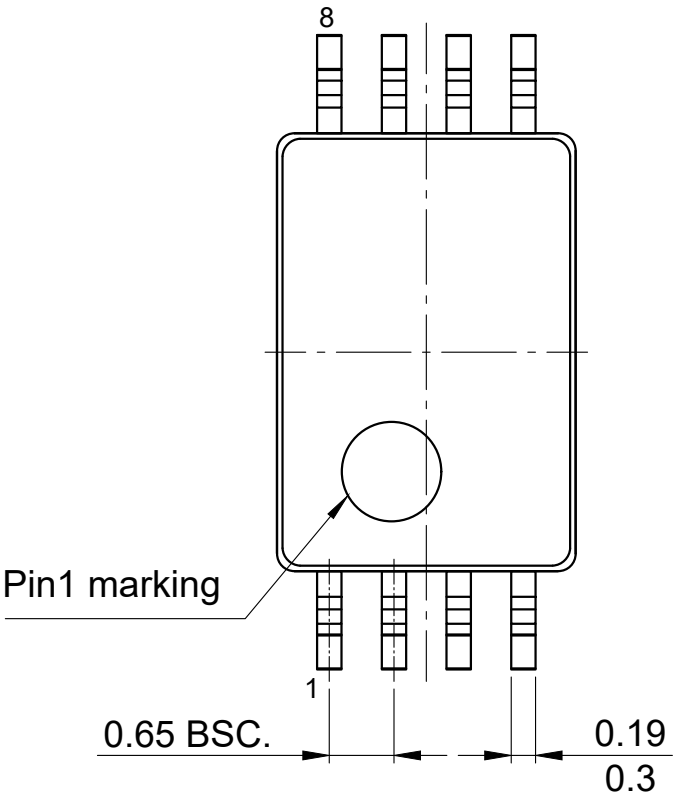

All dimensions are in units mm $\frac{\text{min.}}{\text{max.}}$

The drawing is in compliance with ISO 128-30, Projection Method 1 [ ]