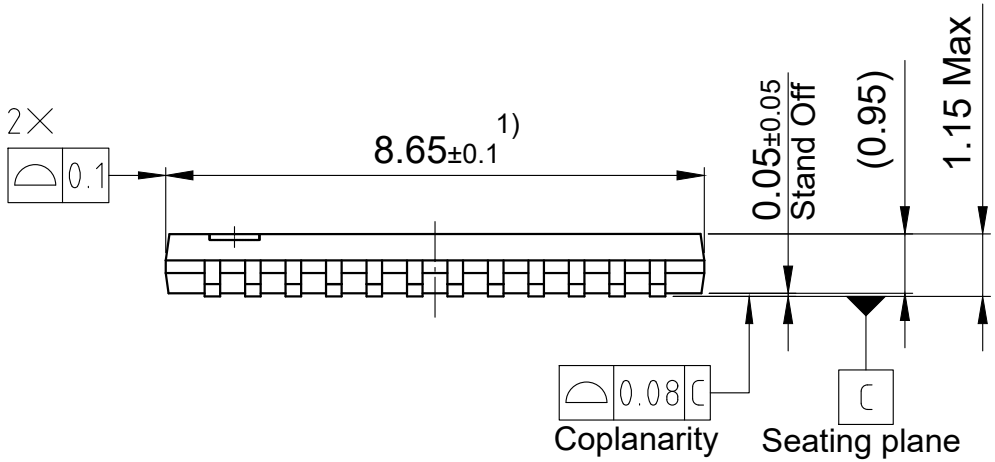

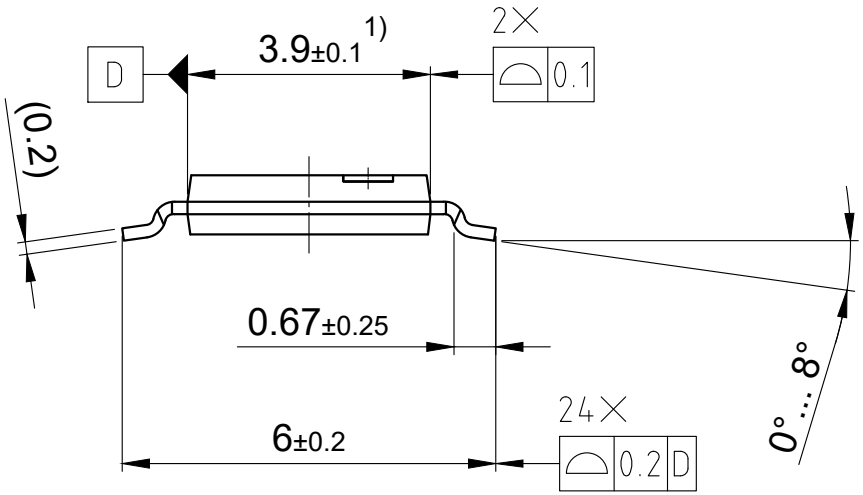

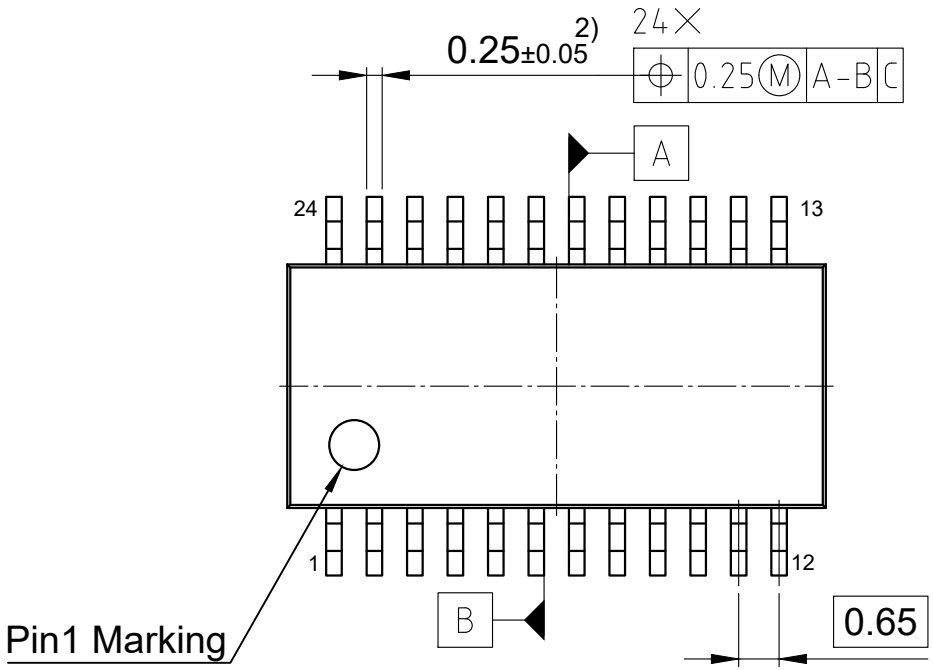

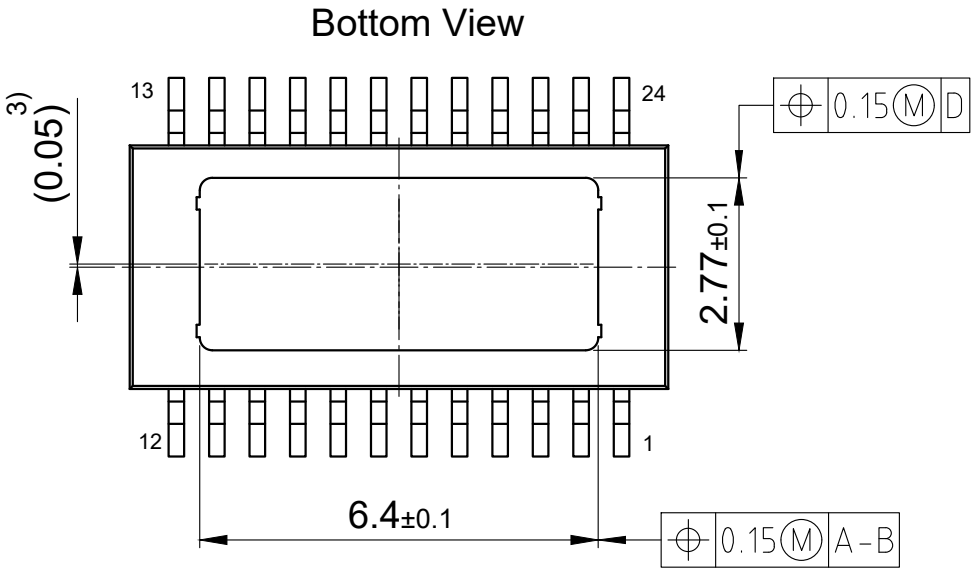

1) Does not include plastic or metal protrusion of 0.15 max. per side
2) Dambar protrusion shall be maximum 0.1mm total in excess of lead width
3) Distance from centreline exposed pad to package centreline
All dimensions are in units mm
The drawing is in compliance with ISO 128-30, Projection Method 1 [ ]