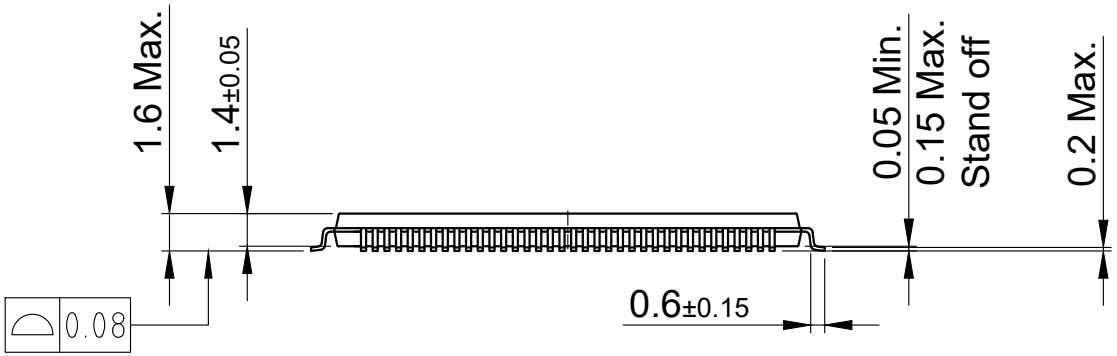

Seating plane

Bottom view

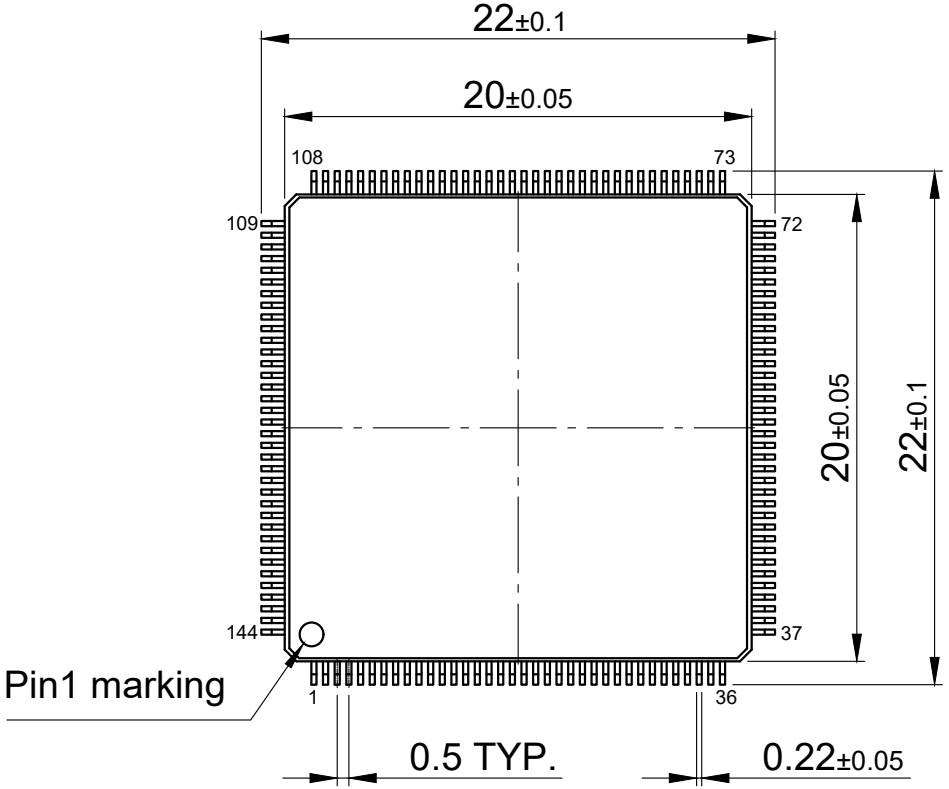

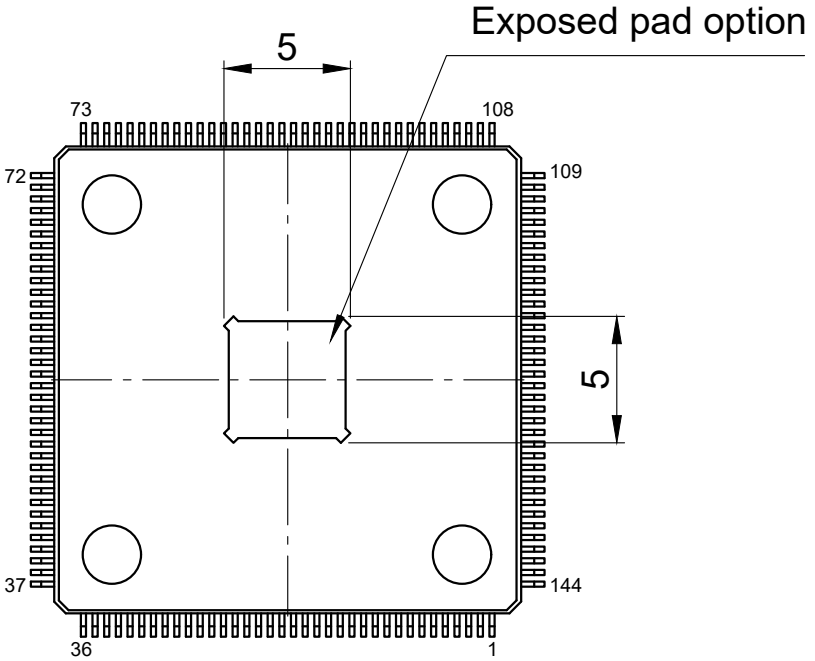

All dimensions are in units mm

The drawing is in compliance with ISO 128-30, Projection Method 1 [ ]