

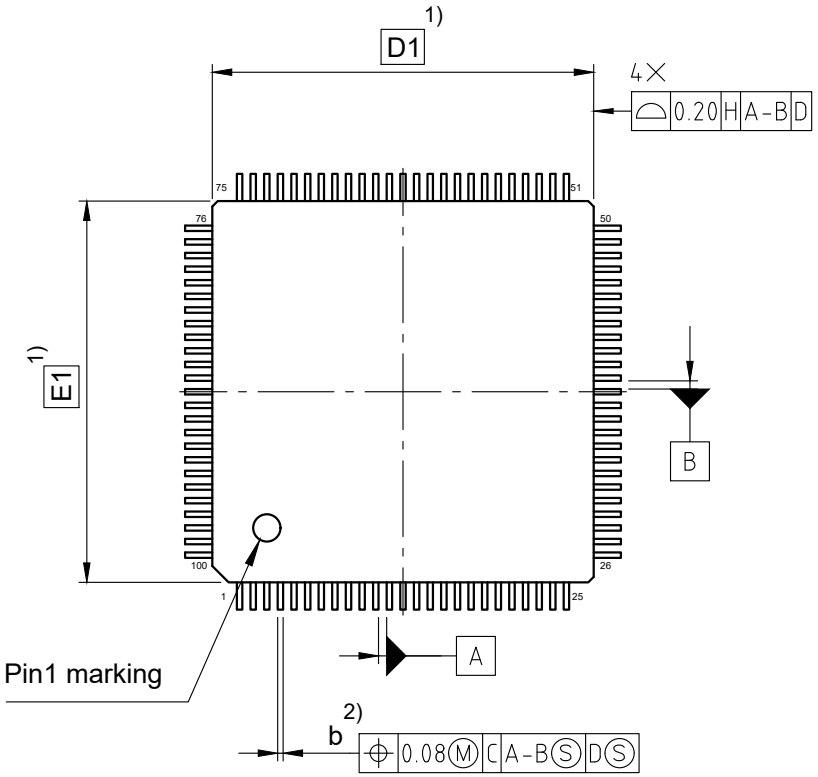

Bottom view

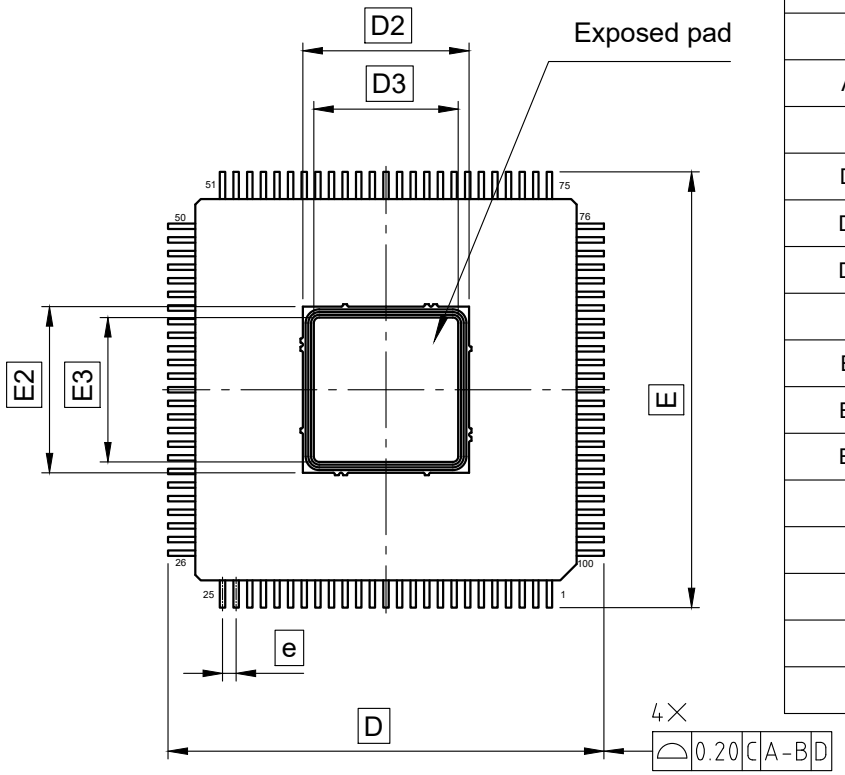

SYMBOL	DIMENSIONS		
	MIN.	NOM.	MAX.
A	-	-	1.6
A1	0.05	-	0.15
D		16 BSC	
D1		14 BSC	
D2		6.1 REF	
D3		5.3 REF	
E		16 BSC	
E1		14 BSC	
E2		6.1 REF	
E3		5.3 REF	
θ	0°	-	8°
c	0.09	0.127	0.2
b	0.15	-	0.27
L	0.45	0.6	0.75
e		0.5 BSC	

1) Dimensions D1 and E1 do not include mold protrusion. allowable protrusion is 0.25mm pre side.

2) Dimension b does not include damber protrusion. the dambar protrusion(s) shall not cause the lead width to exceed b maximum by more than 0.08mm.

All dimensions are in units mm

The drawing is in compliance with ISO 128-30, Projection Method 1 [ ]