BOTTOM VIEW

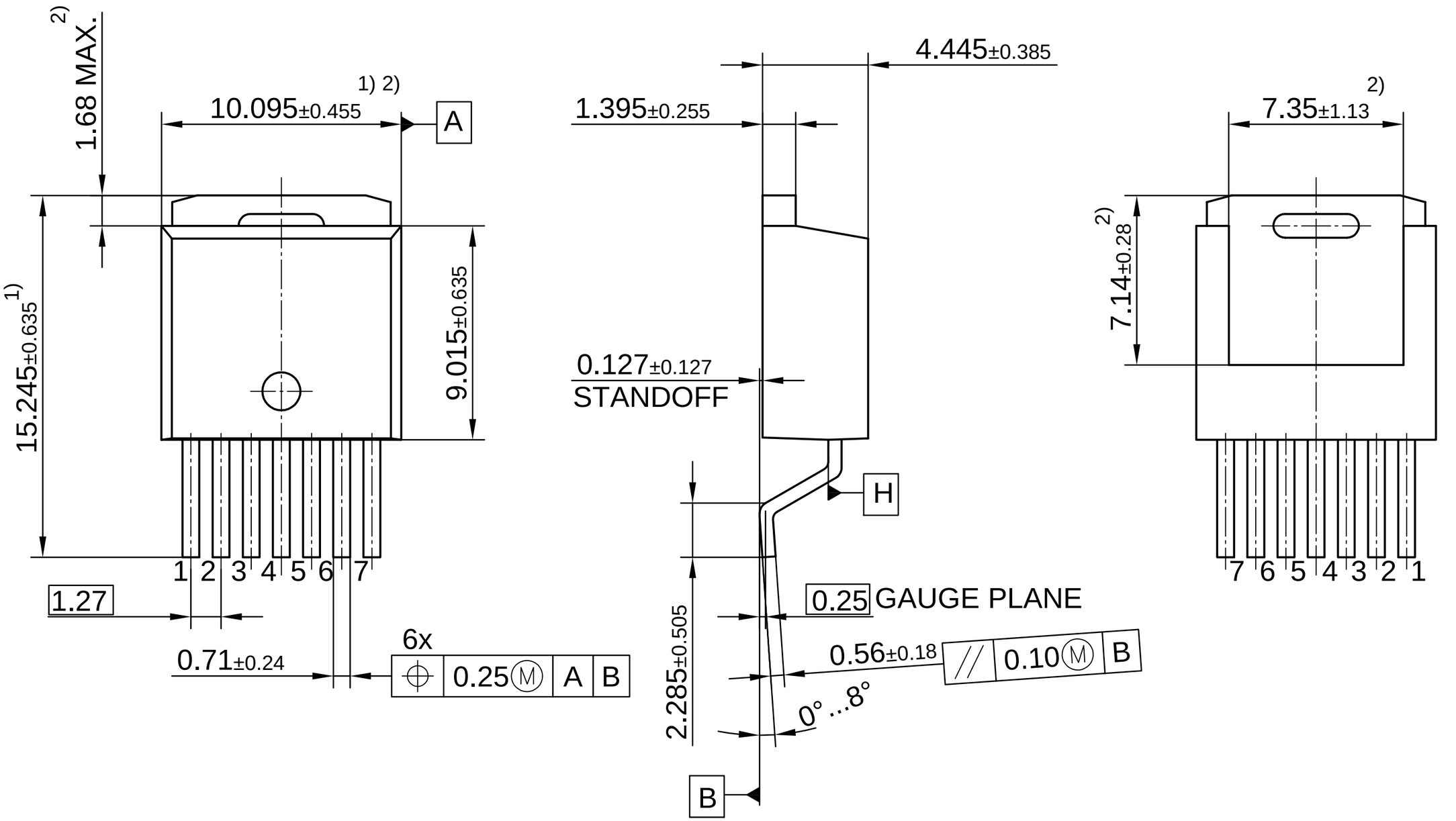

1)DIMENSIONS DO NOT INCLUDE MOLD FLASH, MOLD FLASH SHALL NOT EXCEED 0.127 PER SIDE,
THESE DIMENSION ARE MEASURED AT THE OUTMOST EXTREMES OF PLASTIC BODY AT DATUM H
2)THERMAL PAD CONTOUR IS OPTIONAL, DATUM A & B TO BE DETERMINED AT DATUM PLANE H
ALL DIMENSIONS ARE IN UNITS MM
THE DRAWING IS IN COMPLIANCE WITH ISO 128 & PROJECTION METHOD 1 [ ]