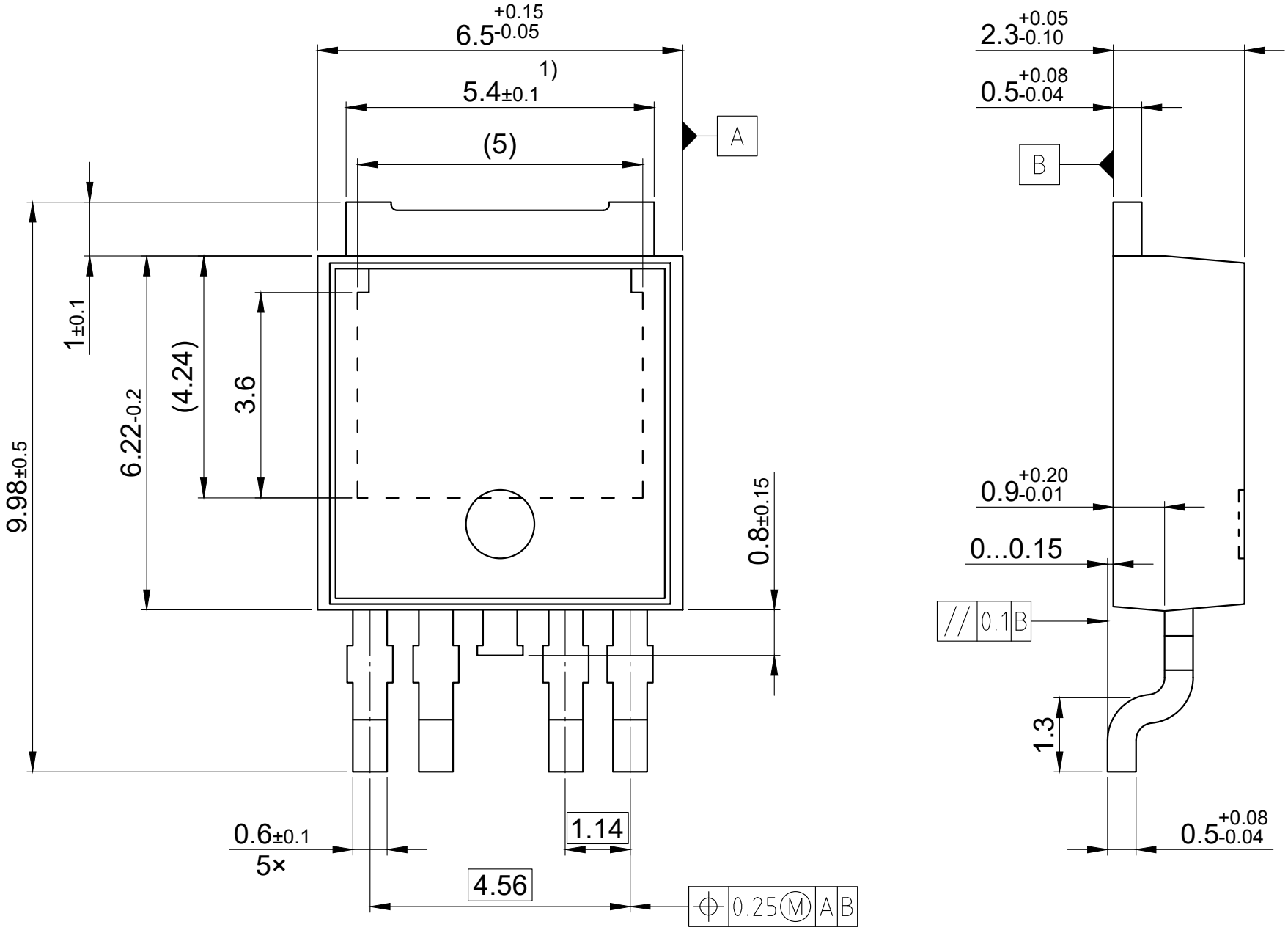

1) +0.2 mm mold flash
All metal surfaces tin plated, except area of cut.
All dimensions are in units mm
The drawing is in compliance with ISO 128-30, Projection Method 1 [ ]
Drawing according to ISO 8015,general tolerances ±0.1/1°30