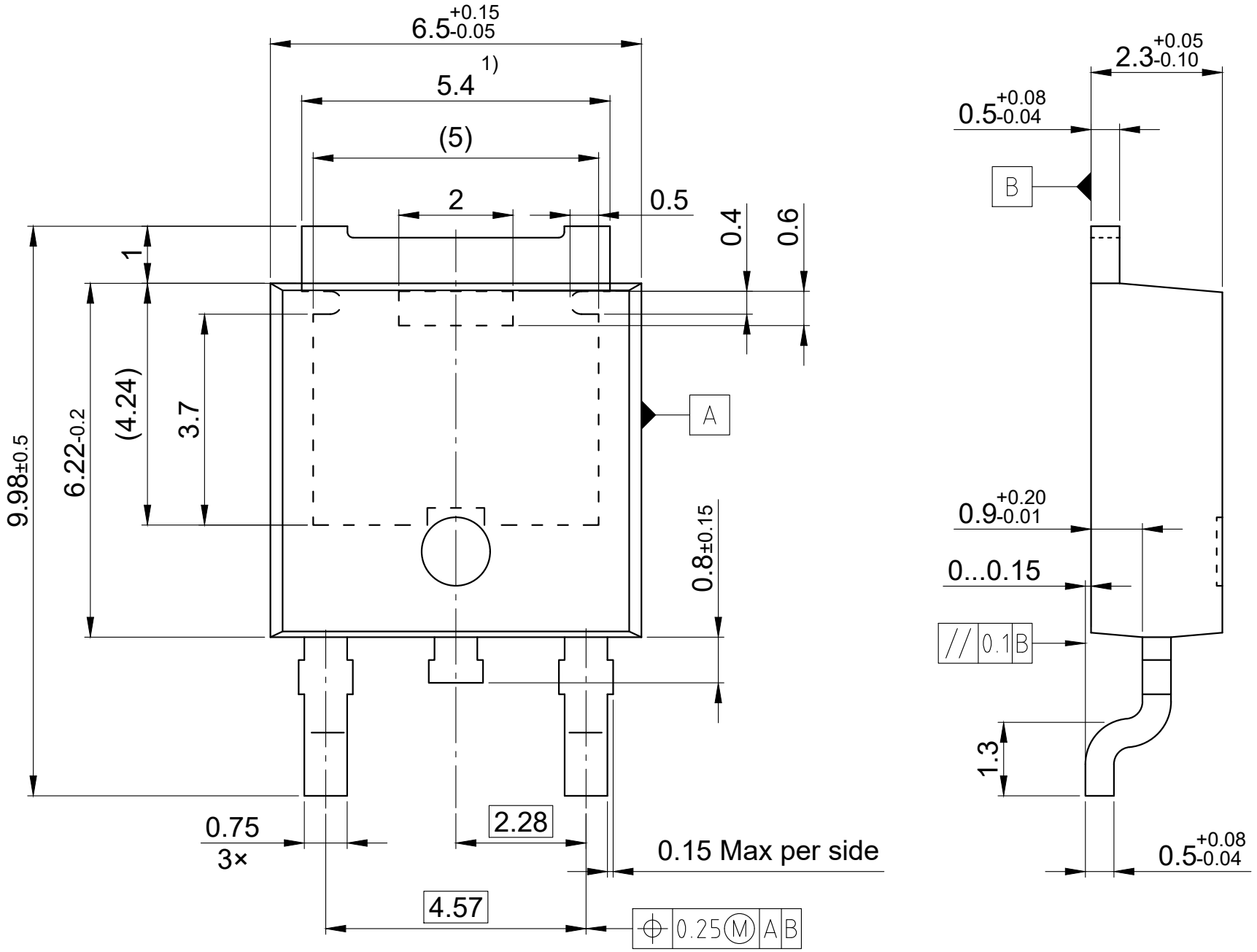

1) +0.22 mold flash

All metal surfaces tin plated except area of cut

All dimensions are in units mm

The drawing is in compliance with ISO 128-30, Projection Method 1 [ ]

Drawing according to ISO 8015, general tolerances ±0.1 / 1°30'