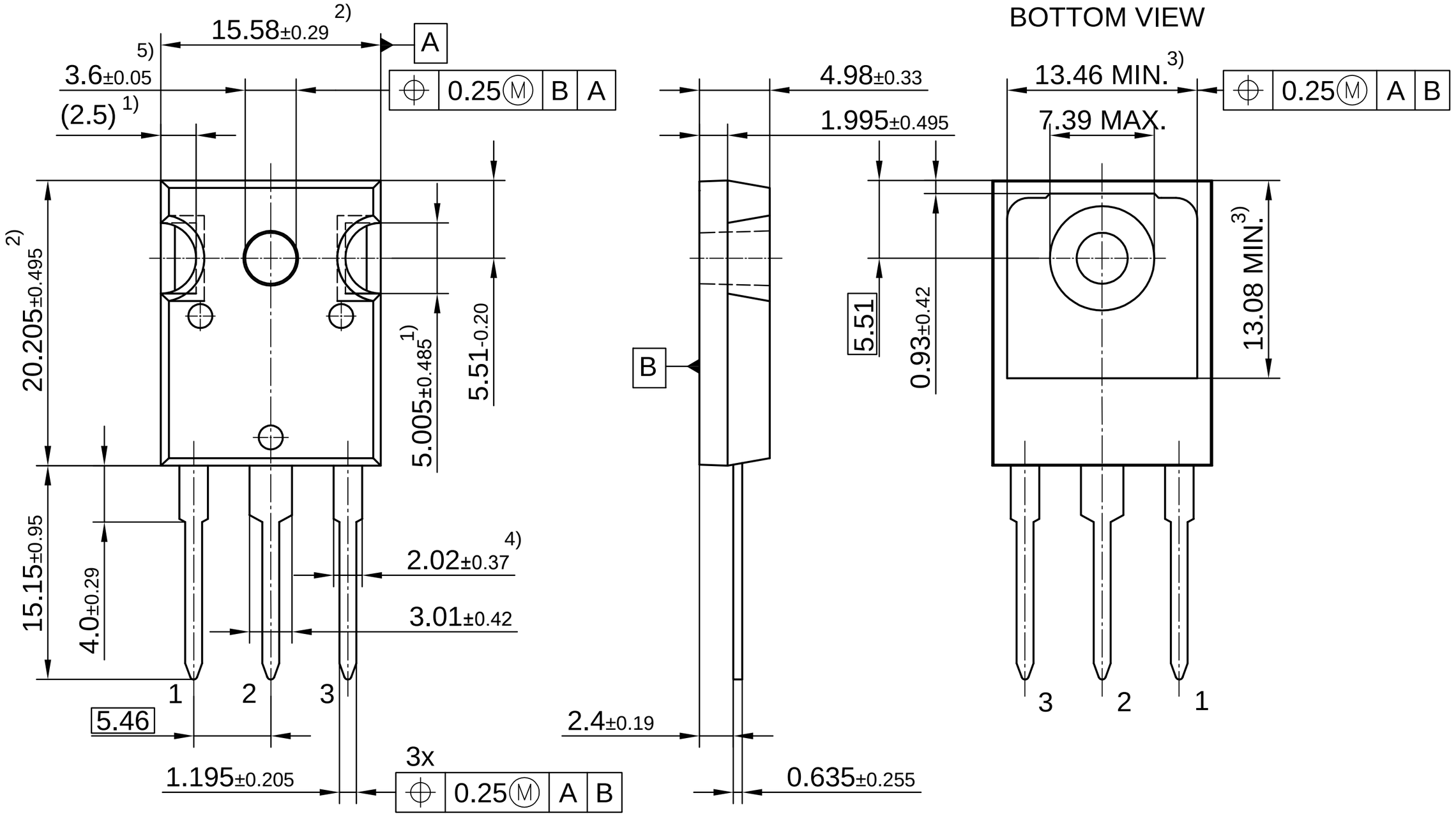

1) CONTOUR OF SLOT OPTIONAL
2) DIMENSIONS DO NOT INCLUDE MOLD FLASH. MOLD FLASH SHALL NOT EXCEED 0.127 PER SIDE
THESE DIMENSIONS ARE MEASURED AT THE OUTERMOST EXTREMES OF THE PLASTIC BODY
3) THERMAL PAD CONTOUR OPTIONAL WITHIN DIMENSIONS
4) LEAD FINISH IS UNCONTROLLED
5) TO HAVE A MAXIMUM DRAFT ANGLE OF 1.5 ° TO THE TOP OF PART WITH A MAXIMUM HOLE DIA OF 3.91 MM

ALL DIMENSIONS ARE IN UNITS MM
THE DRAWING IS IN COMPLIANCE WITH ISO 128 & PROJECTION METHOD 1 [ ]